THIS DRAWING IS UNPUBLISHED. RELEASED FOR PUBLICATION -,- .
© COPYRIGHT - By - ALL RIGHTS RESERVED.

LOC	DIST
BD	36

REVISIONS

P	LTR	DESCRIPTION	DATE	DWN	APVD
	H2	REVISED PER ECO-13-008672	02SEP2013	KH	DR

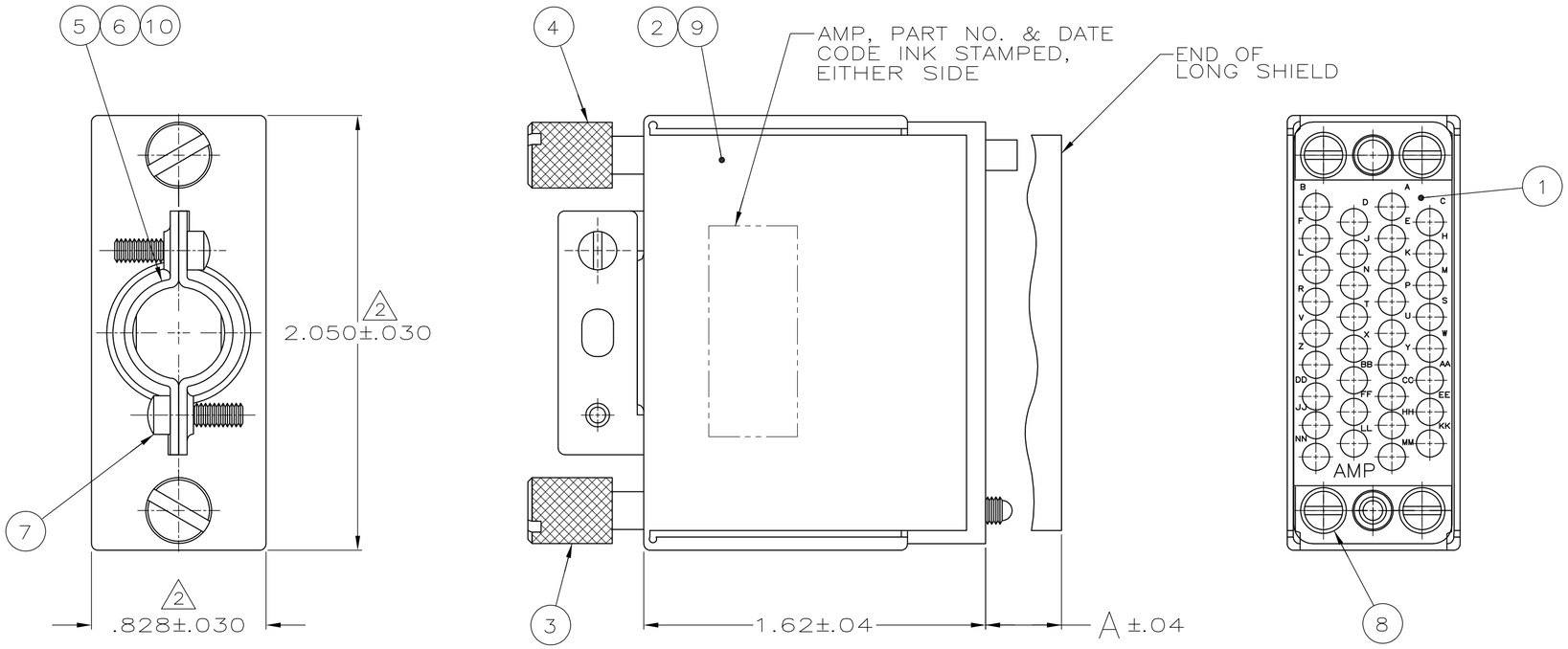

1 PARTIALLY ASSEMBLED.

2 DIMENSION APPLIES AT BASE OF BEND.

3 ALL ITEMS BULK PACKAGED SEPARATELY WITHOUT INK MARKING. KITS TO BE ORDERED IN MULTIPLES OF 100 ONLY.

4 OBSOLETE PARTS: OBSOLETE CIS STREAMLINING PER D.RENAUD/D.SINISI

A	CABLE AREA SQ. IN.	PART NO.	
–	.1176–.1643	~~213300–8~~	OBSOLETE 4
–	.0314–.0707	213300–7	
–	.1491–.2336	~~213300–6~~	OBSOLETE 4
–	.1491–.2336	~~213300–5~~	OBSOLETE
.36	.1176–.1643	~~213300–4~~	OBSOLETE 4
.36	.1491–.2336	213300–3	OBSOLETE
–	.1176–.1643	213300–2	
–	.1491–.2336	213300–1	

–8	–7	–6	–5	–4	–3	–2	–1	DESCRIPTION	REMARKS	ITEM NO.
OBSOLETE 4		OBSOLETE 4	OBSOLETE	OBSOLETE 4	OBSOLETE					
–	2	–	–	–	–	–	–	CABLE CLAMP	STEEL, PLATED ZINC	10
–	–	–	–	1	1	–	–	SHIELD, LONG	ALUMINUM, ANODIZED	9
4	4	4	4	4	4	4	4	SCREW, #4–40, .250 LG.	STEEL, PLATED ZINC	8
2	2	2	2	2	2	2	2	SCREW, #4–40, .375 LG.	STEEL, PLATED ZINC	7
2	–	–	–	2	–	2	–	CABLE CLAMP	STEEL, PLATED ZINC	6
–	–	2	2	–	2	–	2	CABLE CLAMP	STEEL, PLATED ZINC	5
1	1	1	1	1	1	1	1	JACKSCREW, FEMALE	STAINLESS STEEL	4
1	1	1	1	1	1	1	1	JACKSCREW, MALE	STAINLESS STEEL	3
1	1	1	1	–	–	1	1	SHIELD, SHORT	ALUMINUM, ANODIZED	2
–	1	1	–	1	1	1	1	BLOCK, PLUG HSG.	PHENOLIC,BLACK	1

THIS DRAWING IS A CONTROLLED DOCUMENT.

DIMENSIONS: INCHES

TOLERANCES UNLESS OTHERWISE SPECIFIED:
0 PLC ± –
1 PLC ± –
2 PLC ± –
3 PLC ± –
4 PLC ± –
ANGLES ± –

MATERIAL: SEE TABLE

FINISH: SEE TABLE

DWN D.ERDMAN 10–17–86
CHK L.LAWVER 10–17–86
APVD R.WALTER 10–21–86
PRODUCT SPEC —
APPLICATION SPEC —
WEIGHT —

TE Connectivity

NAME: KIT ASSEMBLY, PLUG, 34 POSITION, M SERIES

SIZE	CAGE CODE	DRAWING NO	RESTRICTED TO
A2	00779	C–213300	—

CUSTOMER DRAWING | SCALE 2:1 | SHEET 1 OF 1 | REV H2

213300

1471–9 (3/11)

CUSTOMER DRAWING