Hot Products
Xytronic Soldering & Desoldering Station

Only

Gift Certificates

Search
Search for Keywords
Advanced Search
HEI Line Card
Our Manufacturers
Ordering Catalogs
Table of Contents
Goals for HEI in 2009

Soldering
Soldering Irons
Pb Free Solder Pots
Pb Free Solder Bars
Butane Soldering
Soldering Accessories
Solder (Wire)
Solder Paste and Flux
Soldering Tips
Fume Extractors
Soldering Iron Parts

Desoldering
Desoldering Tools
Tips for Desoldering
Pre-Owned Tools
Desoldering Tips
Desoldering Parts

SMD Rework
SMT Rework Stations
Low Temp Rework
Heat Guns
Vacuum Pickup Tools
Micro Hot Tweezers
PC Board Holders
Work Stations

Microscopes
LCD Video Scope
Video Inspection
Techs Work Light
MagEyes Inspection

Dispensing
Dispensing Systems
Industrial Needles
Dispensing Syringes

Specialty Items
Capacitor Wizard
3Ghz RF Probes
Hot Glue Guns
Heat Guns
Work Benches

Downloads
Instruction Manuals
Price Lists & Brochures
Articles of Interest
Sites of Interest
Newsletters
Receive Newsletters
Video Clips
Parts

About Us
Company Profile
Our Customers
Free Trial Info
HEI Address
Payment Terms
Security
Receive Newsletters

UPS Tracking
FedEx Tracking
DHL Tracking
USPS Tracking

Xytronic Lead-Free Soldering and Desoldering Tips and Hot Tweezer Tips.

Xytronic Lead-Free Soldering and Desoldering Tips

Lead-Free Desoldering Tips for LF-8000 and LF-7000 Each

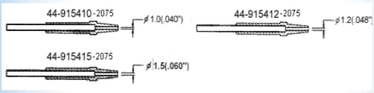

Buy Now | Buy Now | Buy Now

Purchase all three Lead-Free Desoldering Tips for Buy Now

Xytronic Soldering Tips for Lead-Free Stations 169D, LF-1000, LF-8000 and LF-7000

	Lead Free 44-415401	Buy Now
	Lead Free 44-415402	Buy Now
	Lead Free 44-415403	Buy Now
	Lead Free 44-415404	Buy Now
	Lead Free 44-415405	Buy Now
	Lead Free 44-415406	Buy Now
	Lead Free 44-415410	Buy Now
	Lead Free 44-415411	Buy Now
	Lead Free 44-415430	Buy Now
438	Lead Free 44-415438	Buy Now
439	Lead Free 44-415439	Buy Now
440	Lead Free 44-415440	Buy Now
	Lead Free 44-415443	Buy Now

Xytronic Drag Soldering Tip - Click for Larger Image

Click for Larger Image

Purchase eleven Lead-Free Soldering Tips for (Except for 44-415443 Mini-Wave Tip and 44-415430 5mm Knife Tip) Buy Now

Xytronic TWZ100 SMD Tweezers for Xytronic LF-1000 Lead Free Soldering Station and LF-8000 Soldering and Desoldering station.

Xytronic TWZ100 Lead Free Tweezers

The TWZ100 is an optional feature that is specially designed for Lead-Free SMD chips, SOT, Flat pack IC's, and surface mount electrolytic capacitors.

Xytronic TWZ100 SMD Tweezers for
Xytronic LF-1000 Lead Free Soldering Station
Xytronic LF-7000TP Lead Free Soldering / Desoldering Rework Station and
Xytronic LF-8000 Lead Free Soldering / Desoldering Rework Station

TWZ100 Buy Now

TWZ60 and TWZ100 TWEEZER Tips Lead-Free

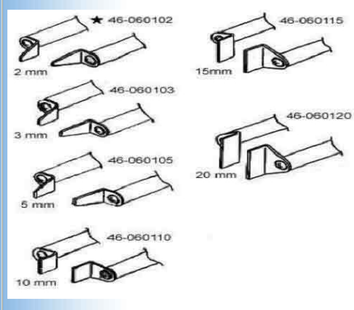

Buy Now | Buy Now | Buy Now | Buy Now | Buy Now | Buy Now

Purchase complete Tweezer Tip Set Package for Buy Now

Howard Electronic Instruments, Inc.
974 SE Pioneer Rd
El Dorado, KS 67042

1-800-394-1984 Toll Free (USA and Canada)
316-321-2800 Local
01-316-321-2800 International Phone
316-321-2803 Fax

Solution Graphics

Receive Newsletter
Our Shop Safe Guarantee
60 Day Money Back Guarantee
Low Price Guarantee
Contact Us

Copyright © 1996 - 2009 Howard Electronic Instruments, Inc. All rights reserved.
Revised: 06/24/2009

IPC Training Center

New Series
Stations
Soldering
Desoldering
Rework
Hot Air
Fume Extractor
IR Rework
Accessories
Handpieces
Soldering Tips
Desoldering Tips
Focus Hoods
Work Lights
Accessories

Print this page
Articles of Interest
Price List
Xytronic Warranty
Ordering Catalog
Video Clips

Soldering Stations
379
169D
LF1000
LF2000
LF1600
Soldering Tips

Desoldering Stations
LF6000
Tips

Solder/Desolder Stations
Most Popular
988D
NEW LF8800
LF7000TP
LF8000
LF8000TP
LF8000852DTP
Soldering Tips
Desoldering Tips

SMD Stations
LF8000852DTP
852DIR610TP
XYREWORK

Hot Air Station
852D

IR Systems
HEI-IR860
IR610 PreHeater

Fume Extractors
426DLX
456DLX
HV-2E

Handpieces
107ESD
208ESD
210ESD
DIA60A
DIA80A
TWZ60
TWZ100

Tips
Soldering Tips
Desoldering Tips
Tweezer Tips

Stands
Stands
Solder Holders

Magnifiers
Work Lights

Accessories
191
236
253
459
Pliers
PRKIT
XY-001
450 Fluid Pump
460 Tip Cleaner
490 IC Popper
TWTP Tweezers
ESD Wriststraps

Homepage
Vendors
About