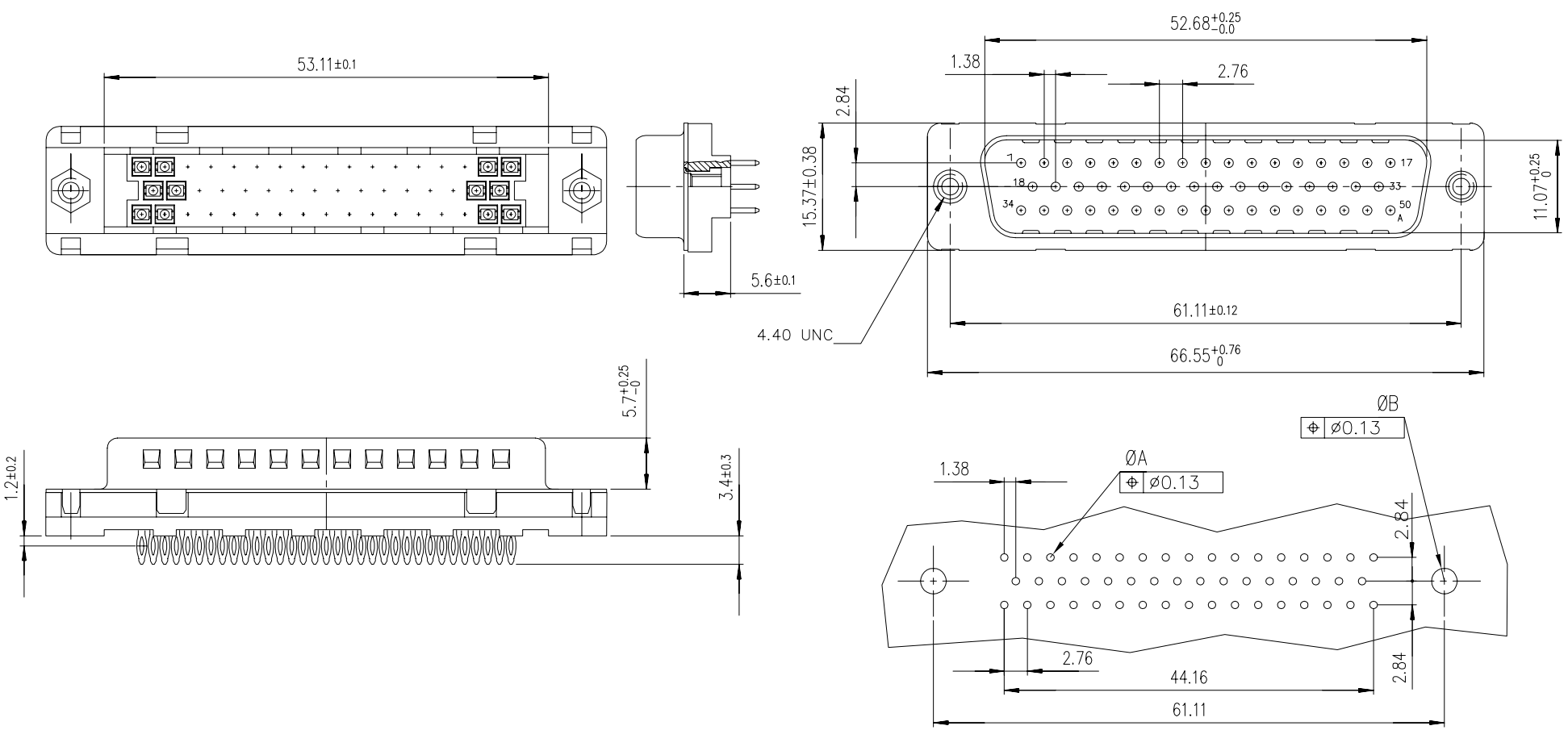

PC board drilling dimensions
(after plating – thickness: 1.60 to 3.20 mm)

TIN LEAD PART NUMBER

PART NUMBER	
200 Mating	D50P90C4PX00
500 Mating	D50P90C6PX00

LEAD FREE PART NUMBER

PART NUMBER	
200 Mating	D50P90C4PX00LF
500 Mating	D50P90C6PX00LF

GENERAL CHARACTERISTICS AND ROHS INFORMATIONS:
SEE DRAWING C01-8646-0001

European Views

rev	ecn no	dr	date
A	–	JAR	1996/07/24
B	LS05-004	MPE	2005/02/15
C	LS06-0097	LGO	2006/07/28
D	LS06-0140	LGO	2006/09/23
E	I11-0120	RPK	2011/06/15
–	–	–	–
–	–	–	–

www.fciconnect.com			surface ISO 1302		tolerance std ISO 406 ISO 1101	projection	mm
			TOLERANCES UNLESS OTHERWISE SPECIFIED				
Dr	PESSON	1996/07/24	ANGULAR	LINEAR	0.X ±0.1	size A3	Scale 2
Eng	PESSON	1996/07/24			0.XX ±0.1		
Chr	LEGARE	1996/07/24	0.XX° ±2°		0.XXX ±0.1	ECN	I11-0120
Appr	LEGARE	1996/07/24	Product family		D-SUB	Spec ref –	
title	MALE CONNECTOR DELTA D LOW PROFILE STRAIGHT PRESS FIT					dwg no C01-8646-0464	Rev. E
	catalog no				–	CUSTOMER	sheet 1 of 1

Copyright FCI.

REV F – 2006-04-17

PDM: Rev:E STATUS: Released Printed: Jun 17, 2011