SML-D14x(A) Series

Data Sheet

■Features

- Original device technology enables high brightness and high reliability

■Outline

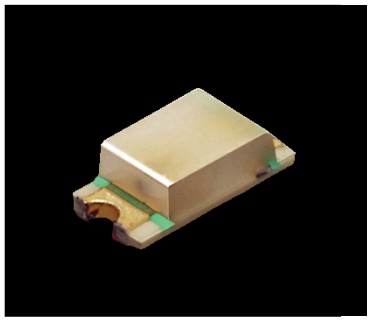

■Size

1608 (0603)
1.6×0.8mm (t=0.55mm)

Color Type			
	V	U2	D
	Y	W	M

■Dimensions

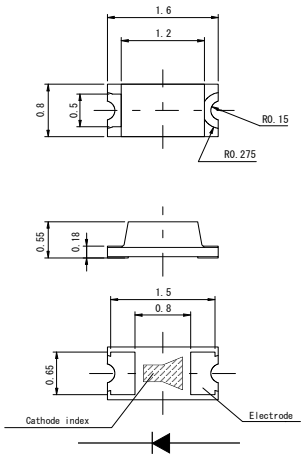

Tolerance : ±0.1
(unit : mm)

■Recommended Solder Pattern

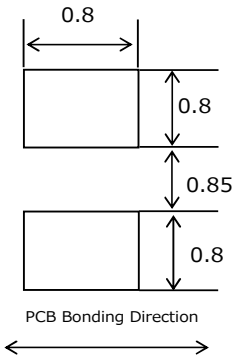

(unit : mm)

■Specifications

Part No.	Chip Structure	Emitting Color	Absolute Maximum Ratings (Ta=25ºC)						Electrical and Optical Characteristics (Ta=25ºC)										
			Power Dissipation P_D(mW)	Forward Current I_F(mA)	Peak Forward Current I_{FP}(mA)	Reverse Voltage V_R(V)	Operating Temp. T_{opr}(ºC)	Storage Temp. T_{stg}(ºC)	Forward Voltage V_F Typ. (V)	I_F (mA)	Reverse Current I_R Max. (μA)	V_R (V)	Dominant Wavelength λ_D Min.*2 (nm)	Typ. (nm)	Max.*2 (nm)	I_F (mA)	Luminous Intensity I_V Min. (mcd)	Typ. (mcd)	I_F (mA)
SML-D14VW(A)	AlGaInP	Red	72	30	100*1	5	-40～+100	-40～+100	2.0	20	10	5	627	630	634	20	71	100	20
SML-D14U2W(A)			75										611	615	619		90	160	
SML-D14DW(A)		Orange											602	605	608		112	200	
SML-D14YW(A)		Yellow							2.1				587	590	593				
SML-D14WW(A)													584	587	591			180	
SML-D14MW(A)		Yellowish green											568	571	574		35.5	60.0	

*1:Duty1/10, 1kHz *2:Measurement tolerance：±1nm

©2016 ROHM Co., Ltd. All rights reserved

■Electrical Characteristics Curves

Reference

Fig.1 Forward Current - Forward Voltages

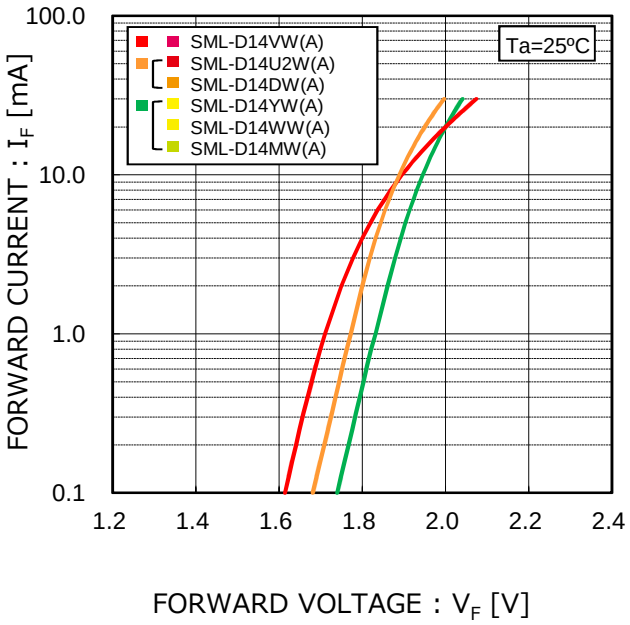

Fig.2 Luminous Intensity - Atmosphere Temperature

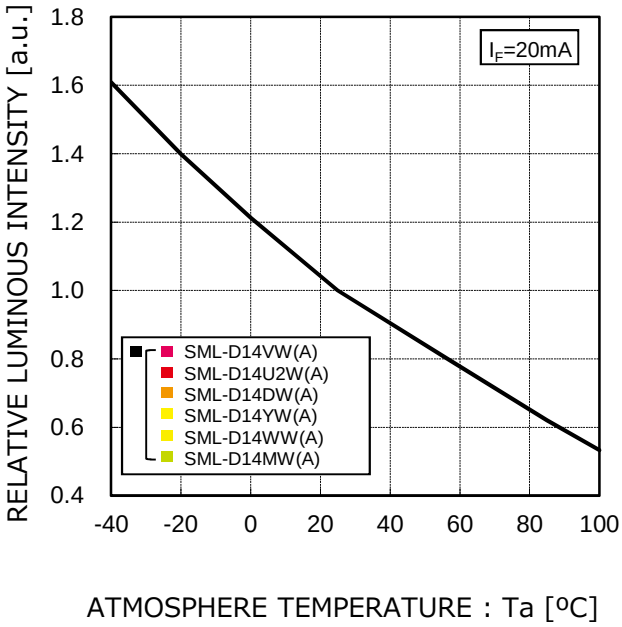

Fig.3 Luminous Intensity - Forward Current

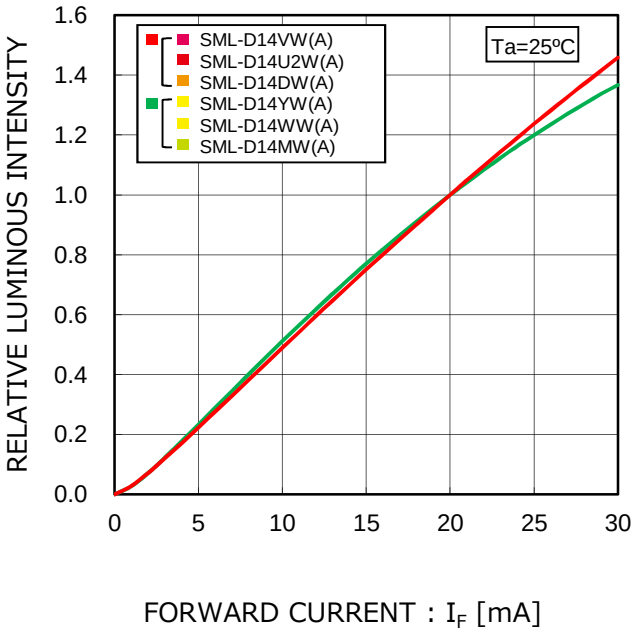

Fig.4 Derating

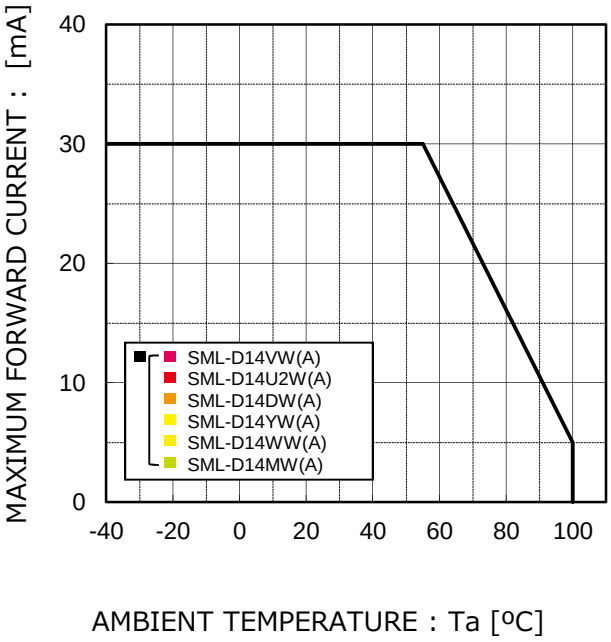

©2016 ROHM Co., Ltd. All rights reserved

■Viewing Angle

Reference

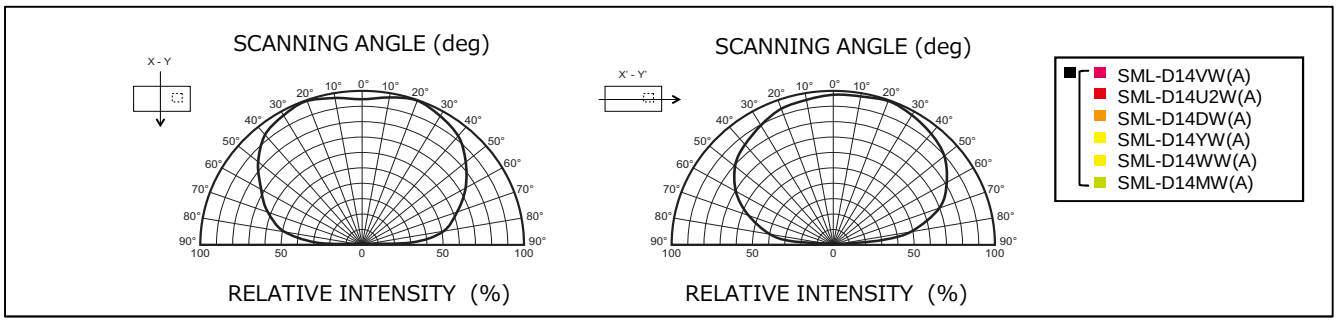

©2016 ROHM Co., Ltd. All rights reserved

■ Rank Reference of Brightness*

*Measurement tolerance:±10%

Red(V,U)

(Ta=25ºC, I_F=20mA)

Rank	AK	AL	AM	AN	AP	AQ	AR	AS	AT	AU	AV	AW	AX
Iv (mcd)	18~22.4	22.4~28	28~35.5	35.5~45	45~56	56~71	71~90	90~112	112~140	140~180	180~224	224~280	280~355
SML-D14VW(A)													
SML-D14U2W(A)													

Orange(D)

(Ta=25ºC, I_F=20mA)

Rank	AK	AL	AM	AN	AP	AQ	AR	AS	AT	AU	AV	AW	AX
Iv (mcd)	18~22.4	22.4~28	28~35.5	35.5~45	45~56	56~71	71~90	90~112	112~140	140~180	180~224	224~280	280~355
SML-D14DW(A)													

Yellow(Y,W)

(Ta=25ºC, I_F=20mA)

Rank	AK	AL	AM	AN	AP	AQ	AR	AS	AT	AU	AV	AW	AX
Iv (mcd)	18~22.4	22.4~28	28~35.5	35.5~45	45~56	56~71	71~90	90~112	112~140	140~180	180~224	224~280	280~355
SML-D14YW(A)													
SML-D14WW(A)													

Yellowish Green(M)

(Ta=25ºC, I_F=20mA)

Rank	AK	AL	AM	AN	AP	AQ	AR	AS	AT	AU	AV	AW	AX
Iv (mcd)	18~22.4	22.4~28	28~35.5	35.5~45	45~56	56~71	71~90	90~112	112~140	140~180	180~224	224~280	280~355
SML-D14MW(A)													

©2016 ROHM Co., Ltd. All rights reserved

■Taping(T86)

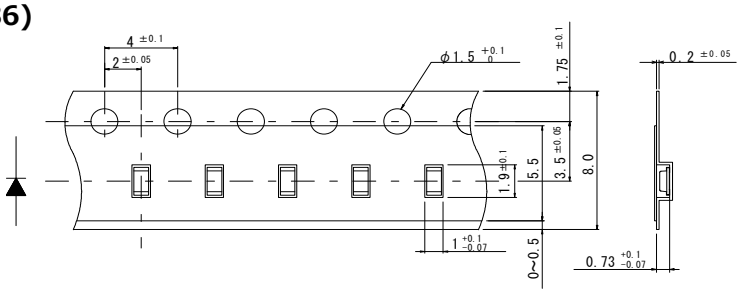

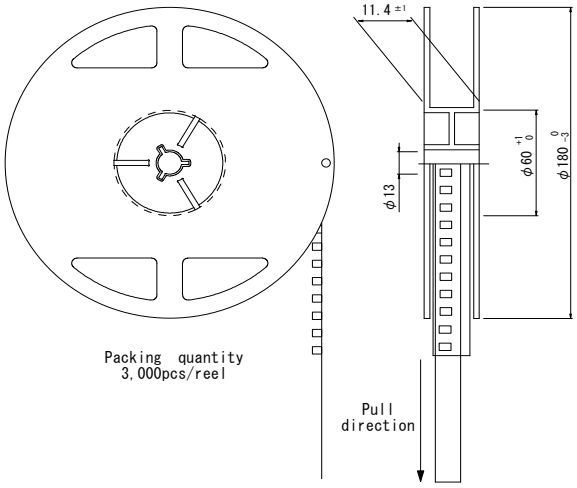

Unit:mm

Note)Tolerance is within ±0.2mm unless otherwise specified.

■Part No. Construction

*"-"will be taken out for emitting color WB/B/E series.

Special Code will be applied for Emitting color WB/B/E series.

Chromaticity rank (for white LED)

Rank sign (Brightness Rank)*

S	M	L	–	D	1	4	U	2	W	T	8	6	A	S

Series name | Package Type | Chip type | Emitting Color | Resin Color | Taping Specification

SML	Chip LED

P1	1.0x0.6 t=0.2mm
E1	1.6x0.8 t=0.36mm
D1	1.6x0.8 t=0.55mm
H1	2.0x1.25 t=0.8mm
M1	
01	3.0x2.0 t=1.3mm
Z1/ZN	3.5x2.8 t=1.9mm
A1	1.6x1.15 t=0.55mm
81/82	3.4x1.25 t=1.1mm
K1	4.5x2.0 t=0.6mm
S1	3.2x1.6 t=1.85mm
P2	1.0x1.0 t=0.2mm
52	1.3x1.5 t=0.6mm
P34	1.0x1.0 t=0.2mm
P36	1.5x1.0 t=0.2mm
VN	3.5x2.8 t=0.6mm

SCM	Chip LED

01	3.0x1.5 t=2.2mm

0	Standard Type
1	Low Current Type
2	High Brightness type
3	Ultra High Brightness type
4	
5	
6	
7	
8	

V	Red
U	Red
U2	Red
D	Orange
Y3	Yellow
Y2	Yellow
Y	Yellow
W	Yellow
M2	Yellowish green
M	Yellowish green
F	Green
P	Green
E	Green
B	Blue
WB	White
T	Phototransistors
RGB	Red/Green/Blue

T	Transparent Colorless
W	Milkey White
B	Black

T86	Cathode at sprocket hole side(the top)
T87	Anode at sprocket hole side(the top)
1	For white LED,
3	csthode at sprocket hole side

notice) S1 series、81 seires

T86	Cathode at sprocket hole side(the back)
T68	Cathode at sprocket hole side(the top)

*Concerning the Brightness rank.
*Please refer to the rank chart above for luminous intensity classification.
*Part name is individual for each rank.
*When shipped as sample,the part name will be a representative part name.
General products are free of ranks.
Please contact sales if rank appointment is needed.

■Packing Specification

ROHM LED products are being shipped with desiccant (silica gel) included in moisture-proof bags.
Pasting the moisture sensitive label on the outer surface of the moisture-proof bags
or enclosing the humidity indication card inside the bag is available upon request.
Please contact the nearest sales office or distributer if necessary.

©2016 ROHM Co., Ltd. All rights reserved

■Precaution (Surface Mount Device)

1．Storage

If the product is heated during the reflow under the condition of hygroscopic state, it may vaporize and expand which will influence the performance of the product. Therefore, the package is waterproof. Please use the product following the conditions:

・Using Conditions

Classification	Temperature	Humidity	Expiration Date	Remark
①Before using	5～30℃	30～70%RH	Within 1 year from Receiving	Storage with waterproof package
②After opening package	5～30℃	Below 70%RH	Within 168h	Please storing in the airtight container with our desiccant (silica gel)

・Baking

Bake the product in case of below:

①The expiration date is passed.

②The color of indicator (silica gel) turned from blue to colorless or from green to pink.

(Even if the product is within the expiration date.)

・Baking Conditions

Temperature	Time	Humidity
60±3℃	12～24h	Below 20%RH
Remark	・Bake products in reel. ・Reel and embossed tape are easy to be deformed when baking, so please try not to apply stress on it. ・Recommend bake once.	

2．Application Methods

2－1．Precaution for Drive System and Off Mode

Design the circuit without the electric load exceeding the ABSOLUTE MAXIMUM RATING that applies on the products. If drive by constant voltage, it may cause current deviation of the LED and result in deviation of luminous intensity, so we recommend to drive by constant current. (Deviation of VF Value will cause deviation of current in LED.) Furthermore, for off mode, please do not apply voltage neither forward nor reverse. Especially, for the products with the Ag-paste used in the die bonding, there's high possibility to cause electro migration and result in function failure.

2－2．Derating

The Derating Characteristics are based on the lifetime of luminous intensity and assumption of degradation & color change of sealing resin or reflector. About its reliability, please evaluate its using conditions and environment and use it after confirmed there is no problem.

2－3．Operation Life Span

There's possibility for intensity of light drop according to working conditions and environments (applied current, surrounding temperature and humidity, corrosive gases), please call our Sales staffs for inquiries about the concerned application below.

①Longtime intensity of light life

②On mode all the time

2－4．Applied Stress on Product

No resin hardening agent such as filler is used in the sealing resin of the product. Therefore, please pay attention to the overstress on it which may influence its reliability.

2－5．Usage

The Product is LED. We are not responsible for the usage as the diode such as Protection Chip, Rectifier, Switching and so on.

©2016 ROHM Co., Ltd. All rights reserved

3．Others

3－1．Surrounding Gas

Notice that if it is stored under the condition of acid gas (chlorine gas, sulfured gas) or alkali gas (ammonia), it may result in low soldering ability (caused by the change in quality of the plating surface) or optical characteristics changes (light intensity, chrominance) and change in quality of cause die bonding (Ag-paste) materials. All of the above will function failure of the products.
Therefore, please pay attention to the storage environment for mounted product (concern the generated gas of the surrounding parts of the products and the atmospheric environment).

3－2．Electrostatic Damage

The product is part of semiconductor and electrostatic sensitive, there’s high possibility to be damaged by the electrostatic discharge. Please take appropriate measures to avoid the static electricity from human body and earthing of production equipment. Especially, InGaN type LEDs have lower resistance value of electrostatic discharge and it is recommended to introduce the ESD protection circuit.
The resistance values of electrostatic discharge (actual values) vary with products, therefore, please call our Sales staffs for inquiries.

3－3．Electromagnetic Wave

Applications with strong electromagnetic wave such as, IH cooker, will influence the reliability of LED, therefore please evaluate before using it.

©2016 ROHM Co., Ltd. All rights reserved

4． Mounting

4 – 1． Soldering

・No resin hardening agent such as filler is used in the sealing resin of the product. Therefore, resin expansion and moisture absorption at humidity will cause heat stress during soldering process and finally has bad influence on the product's reliability.
・The product is not guaranteed for flow soldering.
・Thermal stress during the flow soldering of surrounding parts will influence the reliability of LED and please evaluate the soldering conditions before using it. Also please make sure the expiration date after opening the moistureproof package.
・Please set appropriate reflow temperature based on our product usage conditions and specification.
・The max for reflowing is 2 times, please finish the second reflow soldering and flow soldering with other parts within the usage limitation after open the moistureproof package.
・Compare with N2 reflow, during air reflow, because of the heat and surrounding conditions, it may cause the discoloration of the resin.
・For our product that has no solder resist, because of its solder amount and soldering conditions, one of its specific characteristics is that solder will penetrate into LED. Thus, there's high possibility that will influence its reliability.Therefore, please be informed, concerning it before using it.

4 – 2． Automatic Mounting

4 - 2 - 1 . Silicon Resin Sealing Product

The sealing resin of LED is very soft, so please select adsorption nozzle that would not apply stress directly on the sealing section.

4 - 2 - 2 . Mini Package (Smaller than 1608 size)

・Vibration may result in low mounting rate since it will cause the static electricity of product and adhere to top cover tape. Therefore, the magnet should be set on parts feeder cassette of the mounter to control the product stabilization. In addition, it is recommended to set ionizer to prevent electrostatic charge.

4 – 3 . Mounting Location

The stress like bending stress of circuit board dividing after mounting, may cause LED package crack or damage of LED internal junction, therefore, please concern the mounting direction and position to avoid bending or screwing with great stress of the circuit board.

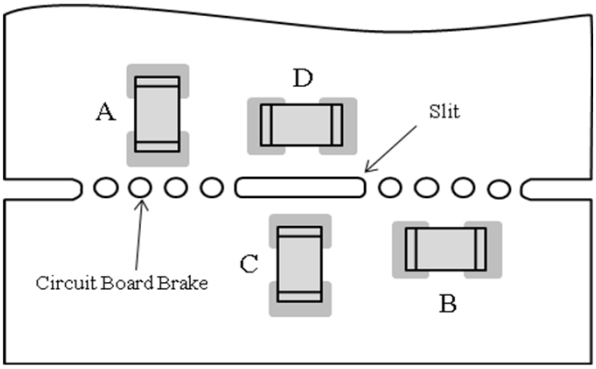

Stress strength according to he mounting position:
A＞B＞C＞D

4—4 . Mechanical Stress after Mounting

The mechanical stress may damage the LED after Circuit Mounting, so please pay attention to the touch on product.

4 – 5． Soldering Pattern for Recommendation

We recommend the soldering pattern that shows on the right.
It will be different according to mounting situation of circuit board, therefore, please concern before designing.

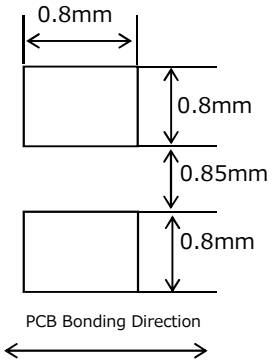

※The product has adopted the electrode structure that it should solder with back electrode of the product.
Thus, please be informed that the shape of electrode pin of solder fillet formation is not guaranteed.
The through hole on electrode surface is for conduction of front and rear electrodes but not for formation of solder fillet.

©2016 ROHM Co., Ltd. All rights reserved

4－6．Reflow Profile

For reflow profile, please refer to the conditions below:(※)

■Meaning of marks, Conditions

Mark	Meanings	Conditions
Ts_{max}	Maximum of pre-heating temperature	180℃
Ts_{min}	Minimum of pre-heating temperature	140℃
t_s	Time from Tsmin to Tsmax	Over 60sec.
T_L	Reference temperature	230～260℃
t_L	Retention time for TL	Within 40sec.
T_P	Peak temperature	260℃(Max)
t_P	Time for peak temperature	Within 10sec.
$\Delta T_R/\Delta t$	Temperature rising rate	Under 3℃/sec.
$\Delta T_D/\Delta t$	Temperature decreasing rate	Over -3℃/sec.

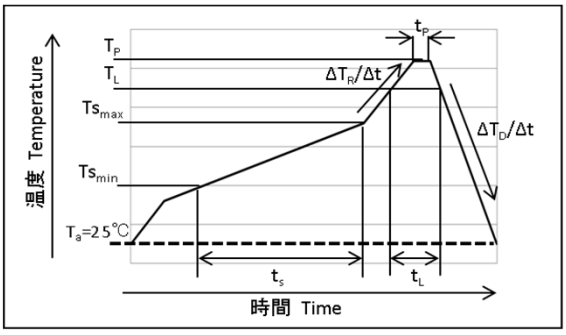

※Above conditions are for reference. Therefore, evaluate by customer's own circuit boards and reflow furnaces before using, because stress from circuit boards and temperature variations of reflow furnaces vary by customer's own conditions.

4－7．Attention Points in Soldering Operation

This product was developed as a surface mount LED especially suitable for reflow soldering.
So reflow soldering is recommended. In case of implementing manual soldering,
please take care of following points.

①SOLDER USED

Sn-Cu, Sn-Ag-Cu, Sn-Ag-Bi-Cu

②HAND SOLDERING CONDITION

LED products do not contain reinforcement material such as a glass fillers.
So thermal stress by soldering greatly influence its reliability.
Please keep following points for manual soldering.

	ITEM	RECOMMENDED CONDITION
a)	Heating method	Condition) Temp. of iron top less than 400℃ within 3 sec. Heating on PCB pattern, not direct to the LED. (Fig-1)
b)	Handling after soldering	Please handle after the part temp. goes down to room temp.

Fig-1

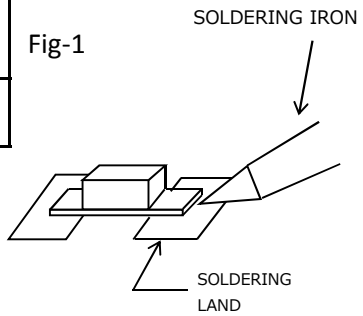

4－8．Cleaning after Soldering

Please follow the conditions below if the cleaning is necessary after soldering.

Solvent	We recommend to use alcohols solvent such as, isopropyl alcohols
Temperature	Under 30℃ within 3 minutes
Ultrasonic Cleaning	15W／Below 1 liter (capacity of tank)
Drying	Under 100℃ within 3 minutes

©2016 ROHM Co., Ltd. All rights reserved

Notes

1) The information contained herein is subject to change without notice.

2) Before you use our Products, please contact our sales representative and verify the latest specifications :

3) Although ROHM is continuously working to improve product reliability and quality, semiconductors can break down and malfunction due to various factors.
Therefore, in order to prevent personal injury or fire arising from failure, please take safety measures such as complying with the derating characteristics, implementing redundant and fire prevention designs, and utilizing backups and fail-safe procedures. ROHM shall have no responsibility for any damages arising out of the use of our Poducts beyond the rating specified by ROHM.

4) Examples of application circuits, circuit constants and any other information contained herein are provided only to illustrate the standard usage and operations of the Products. The peripheral conditions must be taken into account when designing circuits for mass production.

5) The technical information specified herein is intended only to show the typical functions of and examples of application circuits for the Products. ROHM does not grant you, explicitly or implicitly, any license to use or exercise intellectual property or other rights held by ROHM or any other parties. ROHM shall have no responsibility whatsoever for any dispute arising out of the use of such technical information.

6) The Products are intended for use in general electronic equipment (i.e. AV/OA devices, communication, consumer systems, gaming/entertainment sets) as well as the applications indicated in this document.

7) The Products specified in this document are not designed to be radiation tolerant.

8) For use of our Products in applications requiring a high degree of reliability (as exemplified below), please contact and consult with a ROHM representative : transportation equipment (i.e. cars, ships, trains), primary communication equipment, traffic lights, fire/crime prevention, safety equipment, medical systems, servers, solar cells, and power transmission systems.

9) Do not use our Products in applications requiring extremely high reliability, such as aerospace equipment, nuclear power control systems, and submarine repeaters.

10) ROHM shall have no responsibility for any damages or injury arising from non-compliance with the recommended usage conditions and specifications contained herein.

11) ROHM has used reasonable care to ensur the accuracy of the information contained in this document. However, ROHM does not warrants that such information is error-free, and ROHM shall have no responsibility for any damages arising from any inaccuracy or misprint of such information.

12) Please use the Products in accordance with any applicable environmental laws and regulations, such as the RoHS Directive. For more details, including RoHS compatibility, please contact a ROHM sales office. ROHM shall have no responsibility for any damages or losses resulting non-compliance with any applicable laws or regulations.

13) When providing our Products and technologies contained in this document to other countries, you must abide by the procedures and provisions stipulated in all applicable export laws and regulations, including without limitation the US Export Administration Regulations and the Foreign Exchange and Foreign Trade Act.

14) This document, in part or in whole, may not be reprinted or reproduced without prior consent of ROHM.

Thank you for your accessing to ROHM product informations.
More detail product informations and catalogs are available, please contact us.

ROHM Customer Support System

http://www.rohm.com/contact/

© 2015 ROHM Co., Ltd. All rights reserved.

SML-D14VW(A) - Web Page

Distribution Inventory

Part Number	SML-D14VW(A)
Package	SML-D14
Unit Quantity	3000
Minimum Package Quantity	3000
Packing Type	Taping
Constitution Materials List	inquiry
RoHS	Yes