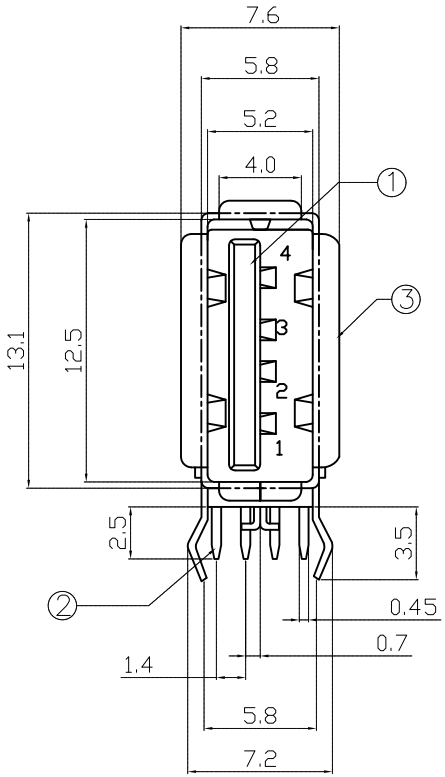

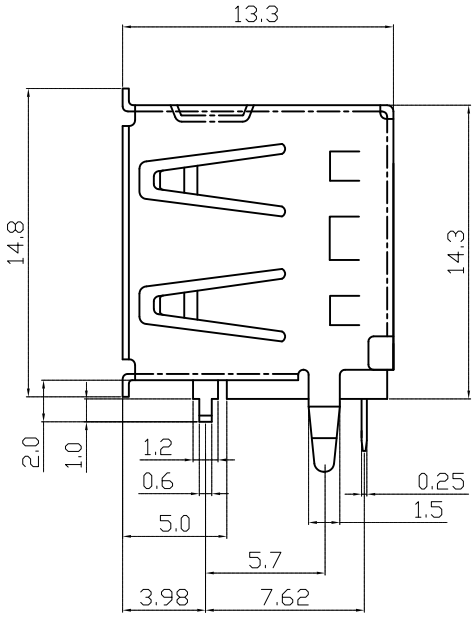

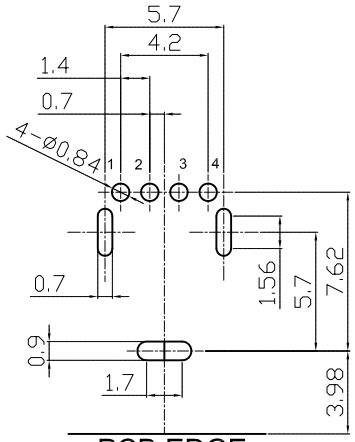

RECOMMENDED PCB LAYOUT(TOP VIEW)

N0.	NAME	MATERIAL	FINISH	REMARK	Q'TY
1	HOUSING	NYLON PA9T G.F	WHITE		1
2	PIN TERM.	PHOS. BRONZE T:0.25	GOLD/TIN PLATED	GOLD:1~3u" ; NI:40~60u"; TIN:120u"	4
3	SHELL	BRASS T:0.3	NICKEL PLATED	NI:80~120u"	1

RoHS compliant

Scale	2:1
TOLERANCE	
X.	±0.38
X.X	±0.25
X.XX	±0.13
DIM	TOL
X.°	±3°
X.X°	±1°
Angle	TOL

Id.	Modification	Date	Name
②	Update	14.07.2009	Rale
①	Drawn	60.02.2004	Hellwig

	Date	Name
Drawn	60.02.2004	Hellwig
Approved	14.07.2009	Hellwig

Customer-No.

ASSMANN WSW-No.
A-USB A-E/LP

Drawing-No.
ASS 1413A CO

rev02

Replace

Sheet