THIS COPY IS PROVIDED ON A RESTRICTED BASIS AND IS NOT TO BE USED IN ANY WAY DETRIMENTAL TO THE INTERESTS OF PANDUIT CORP.

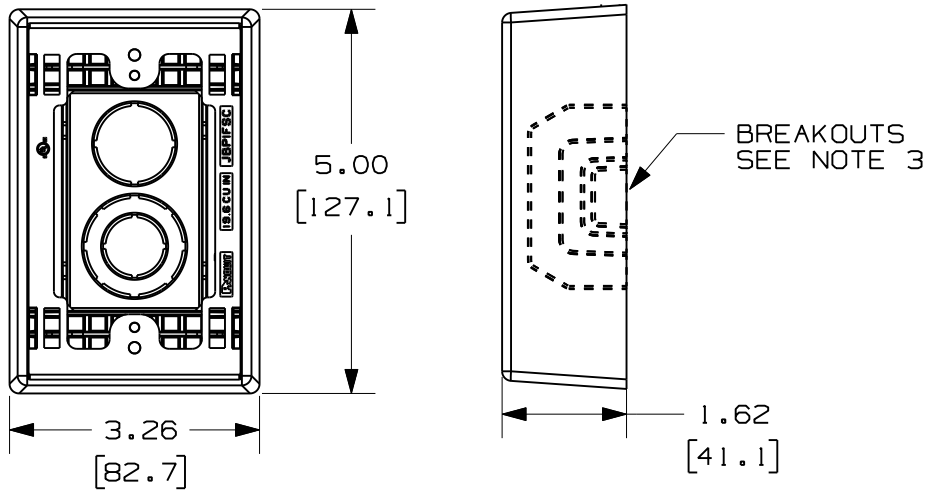

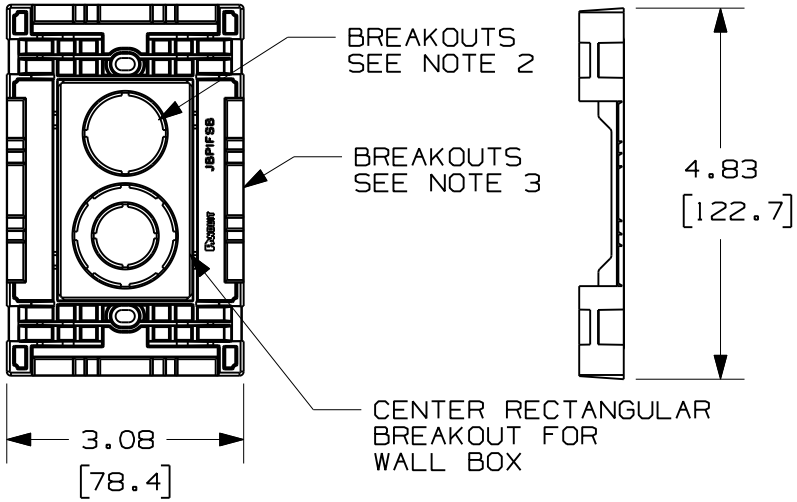

PANDUIT P/N	WEIGHT/PC	VOLUME CU.IN./CC
JBP1FS	0.21 LB/PC (97.3 g/PC)	19.6 (321)

NOTES:

1. SEE CURRENT CATALOG FOR ADDITIONAL PART SUFFIXES TO INDICATE COLOR AND OR PACKAGE QUANTITY.
2. CONCENTRIC BREAKOUTS TO ACCOMMODATE CONDUIT SIZES OF 1/2", 3/4", AND 1" DIAMETERS.
3. BREAKOUTS ARE PROVIDED FOR LD, LDP, LDPH, LDS, AND T45 RACEWAYS.
4. COVER IS EXTENDED OUT AND DOWN AROUND SIDES OF BASE WHEN ASSEMBLED.
5. DIMENSIONS IN PARENTHESES ARE IN METRIC.

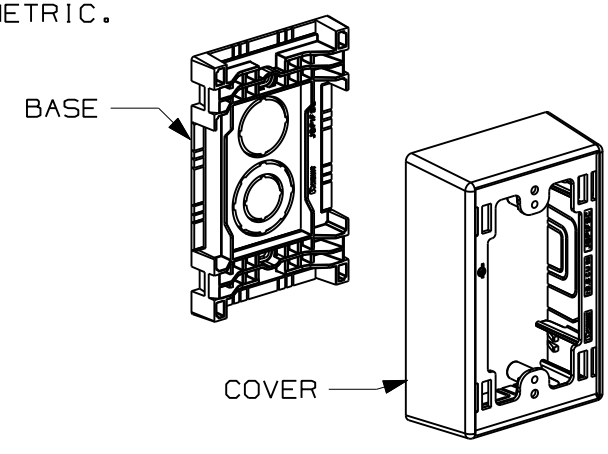

REV	DATE	BY	CHK	DESCRIPTION	ECN	CHK	CUST	SUP
2	11-09-09	BDK	RMHI	RELEASED TO PRODUCTION	39908-02	RMHI		RTFI
1	10-27-09	BDK	RMHI	A. UPDATED DRAWING WITH LATEST COMPONENT GEOMETRY				
R	5-13-09	BDK	RMHI	DRAWING RELEASED				

CAD FILENAME/LAYERS: D39908BB_DC_JBP1FS/01B

PANDUIT CORP. TINLEY PARK, ILLINOIS

1 GANG POWER SNAP-TOGETHER JUNCTION BOX (JBP1FS)

CUSTOMER DRAWING

UNLESS OTHERWISE SPECIFIED, DIMENSIONAL TOLERANCES ARE:
(.X) ± (.XXX) ±
(.XX) ±.03(.8) ANGLES ±

UNLESS OTHERWISE SPECIFIED, ALL DIMENSIONS ARE GIVEN IN INCHES, THIRD ANGLE PROJECTION.

DRAWN BY: BDK
DATE: 5-13-09
CHECKED BY: RMHI
MAT'L: PVC
SCALE: NONE
DRAWING NO.: 39908-02
DWG SIZE: A