© COPYRIGHT BY TRP CONNECTOR ALL RIGHTS RESERVED.

REVISIONS					
P	LTR	DESCRIPTION	DATE	DWN	APVD
	E	LOGO CHANGE	07APR2013	QL	KZ

MECHANICAL:

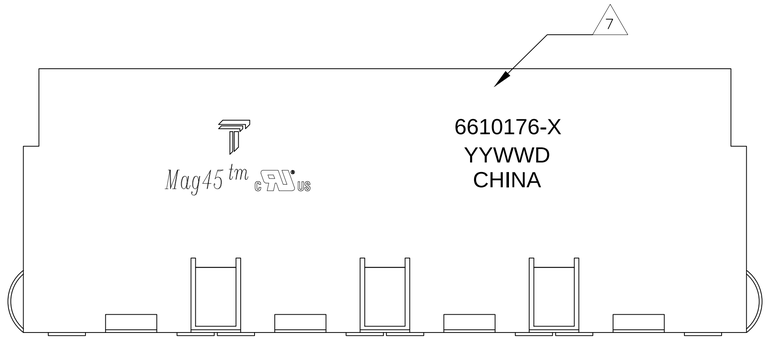

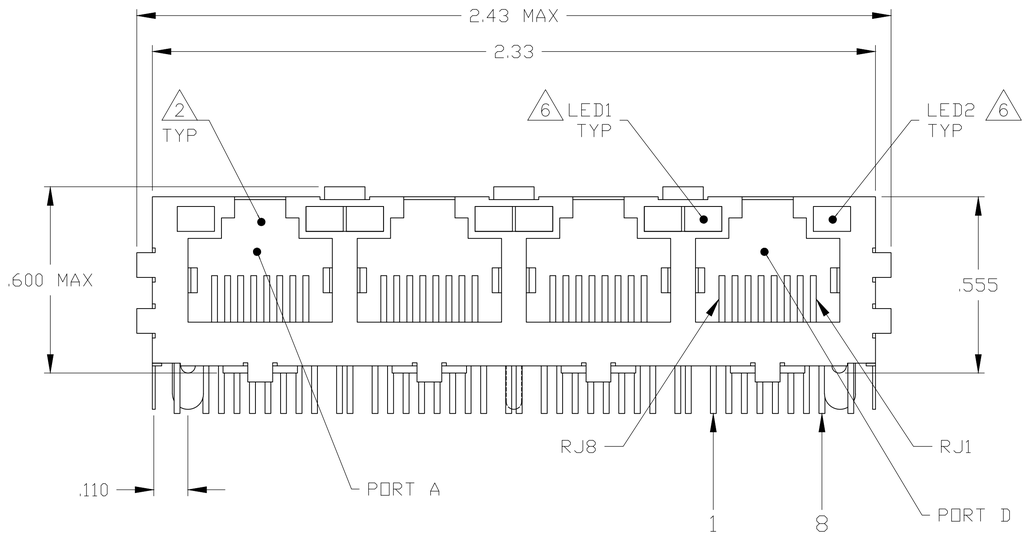

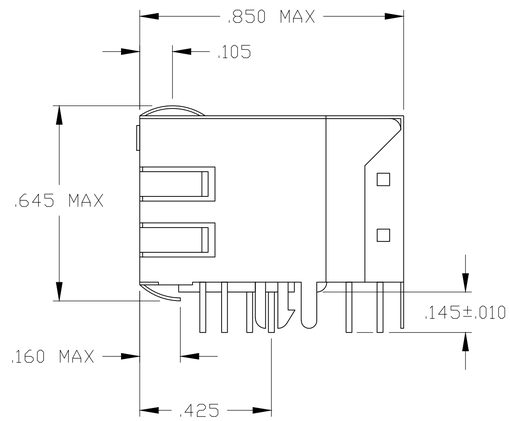

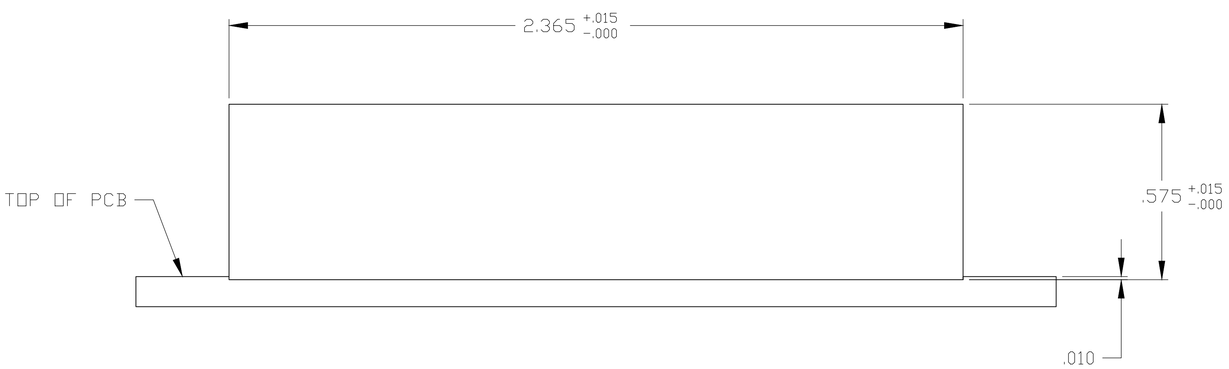

1X4 SUGGESTED PANEL CUTOUT

1. MATERIALS:
-HOUSING - THERMOPLASTIC PET POLYESTER FLAMMABILITY RATING UL 94V-0.
-SHIELD - .010" THICK, C26800 BRASS PREPLATED WITH 30µINCH MIN SEMI-BRIGHT NICKEL. SOLDER TABS POST DIPPED WITH 100µINCH MIN SAC SOLDER.
-MOD JACK CONTACTS - 0.0157 X 0.018" PHOSPHOR BRONZE, 50µINCH MIN OVERALL NICKEL UNDERPLATE WITH SELECT 50µINCH MIN HARD GOLD FINISH PLATE. SOLDERTAILS WITH 100µINCH MIN MATTE TIN AND/OR SAC SOLDER DIP.
-LIGHT EMITTING DIODE(LED) - DIFFUSED EPOXY LENS, .020" X .020" CARBON STEEL WIREFRAME LEADS PRE-PLATED WITH 80µINCH SILVER OVER 40µINCH NICKEL UNDERPLATE OVER 40µINCH COPPER UNDERPLATE. POST-PLATED WITH 100µIN MIN MATTE TIN AND/OR SAC SOLDER DIP OR PURE TIN SOLDER DIP.

2. RJ45 JACK CAVITY CONFORMS TO FCC RULES AND REGULATIONS PART 68, SUB PART F.

3. MAGNETICS
-IMPEDANCE: 100 OHMS
-TURNS RATIO (CHIP:CABLE): TX = 1:1, RX = 1:1
-OPEN CIRCUIT INDUCTANCE (OCL): 350µH MIN @100kHz, 0.1VRMS, 8mADC BIAS FROM 0°C TO 70°C, TX AND RX
-PERFORMANCE @ 25°C:
INSERTION LOSS (IL): 1.1dB MAX FROM 0.5MHz TO 100MHz
RETURN LOSS (RL): 18dB MIN FROM 0.5MHZ TO 30MHz
18-20LOG(f/30)dB MIN FROM 30.1MHz TO 60MHz
12dB MIN FROM 60.1MHz TO 80MHz
CROSSTALK ATTENUATION: 35dB MIN FROM 0.5MHz TO 40MHz
33-20×LOG(f/50)dB MIN FROM 40.1MHz TO 100MHz
COMMON MODE REJECTION RATIO (CMRR): 30dB MIN FROM 0.5MHz TO 100MHz
-ISOLATION VOLTAGE: COMPLIES WITH IEEE802.3 2002, PARA 23.5.1.1, ITEM b.

4. OPERATING TEMPERATURE: FROM 0°C TO +70°C.

5. INDICATED CONNECTIONS ARE FOR HUB CONFIGURATION. THE MAGNETICS ARE SYMMETRICAL AND SUPPORT AUTO-MDIX.

6. LEDS ARE DRIVEN WITH CONSTANT CURRENT AT APPROX 20 mA
LED COLOR: DOMINANT WAVELENGTH (λD): GREEN 568 nm TYP @ IF=20 mA
FORWARD VOLTAGE (VF): GREEN 2.2V TYP @ IF=20 mA
DOMINANT WAVELENGTH (λD): YELLOW 588 nm TYP @ IF=20 mA
FORWARD VOLTAGE (VF): YELLOW 2.1V TYP @ IF-20 mA

7. TRP CONNECTOR LOGO, PART NUMBER, DATE CODE, COUNTRY OF ORIGIN AND AGENCY APPROVAL MARKING IN APPROXIMATE LOCATION SHOWN.

8. THE PART IS RECOMMENDED FOR WAVE SOLDERING PROCESS, PREHEAT TEMPERATURE IS 120°C TO 160°C, 120 SECONDS TO 180 SECONDS, PEAK WAVE SOLDERING TEMPERATURE IS 260°C MAX, 10 SECONDS MAX.

4	1	GREEN/YELLOW	GREEN	6610176-5
BOTTOM PANEL GROUND TABS	REAR GROUND TABS	LED1 6	LED2 6	PART NUMBER

THIS DRAWING IS A CONTROLLED DOCUMENT.

DIMENSIONS: INCHES

TOLERANCES UNLESS OTHERWISE SPECIFIED:
0 PLC ± –
1 PLC ± –
2 PLC ± .010
3 PLC ± .005
4 PLC ± –
ANGLES ± –

MATERIAL 1
FINISH 1

DWN G. ATTADIA – DOCK5 16MAR2005
CHK D. FAROLE 16MAR2005
APVD D. FAROLE 16MAR2005

PRODUCT SPEC 108-2100
APPLICATION SPEC –
WEIGHT –

TRP connector
TRP connector
Dongguan China

NAME 1X4 MAG45(TM) MODULAR JACK, 7K1 SCHEMATIC, 746K1 MAGNETIC CIRCUIT, SHIELDED, DECOUPLING CAPACITOR, LEDS, S3 GROUND TABS

SIZE	CAGE CODE	DRAWING NO	RESTRICTED TO
A1	00779	C-6610176	–

CUSTOMER DRAWING SCALE 4:1 SHEET 1 OF 2 REV E

© COPYRIGHT BY TRP CONNECTOR ALL RIGHTS RESERVED.

746K1 SERIES MAGNETIC CIRCUIT (3/5)
PORTS 1 & 3

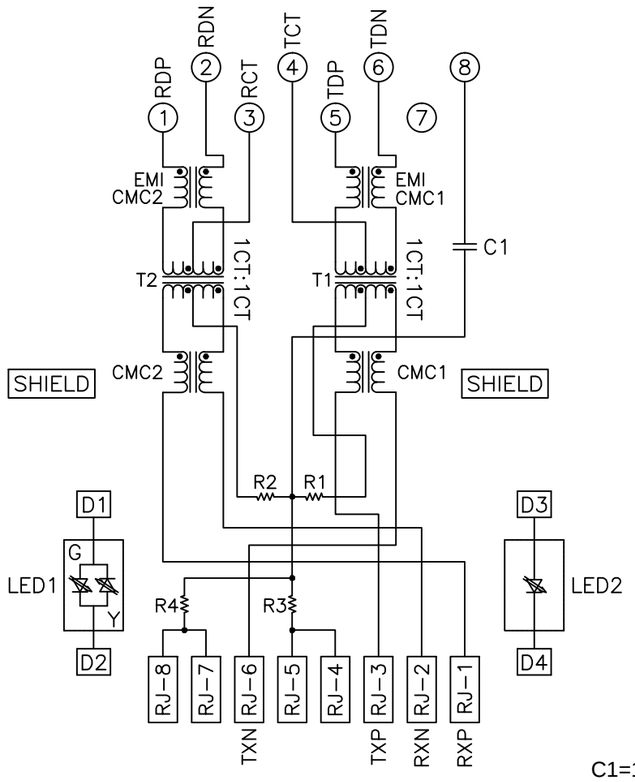

746K1 SERIES MAGNETIC CIRCUIT (3/5)
PORTS 2 & 4

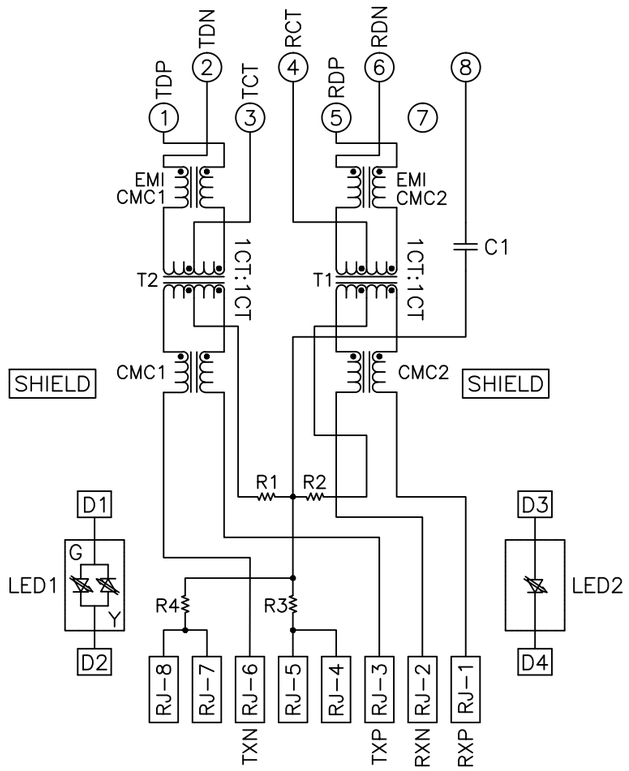

C1=1000pF, 2kV CAPACITOR
R1-R4=75 OHMS, 1/16 W RESISTORS

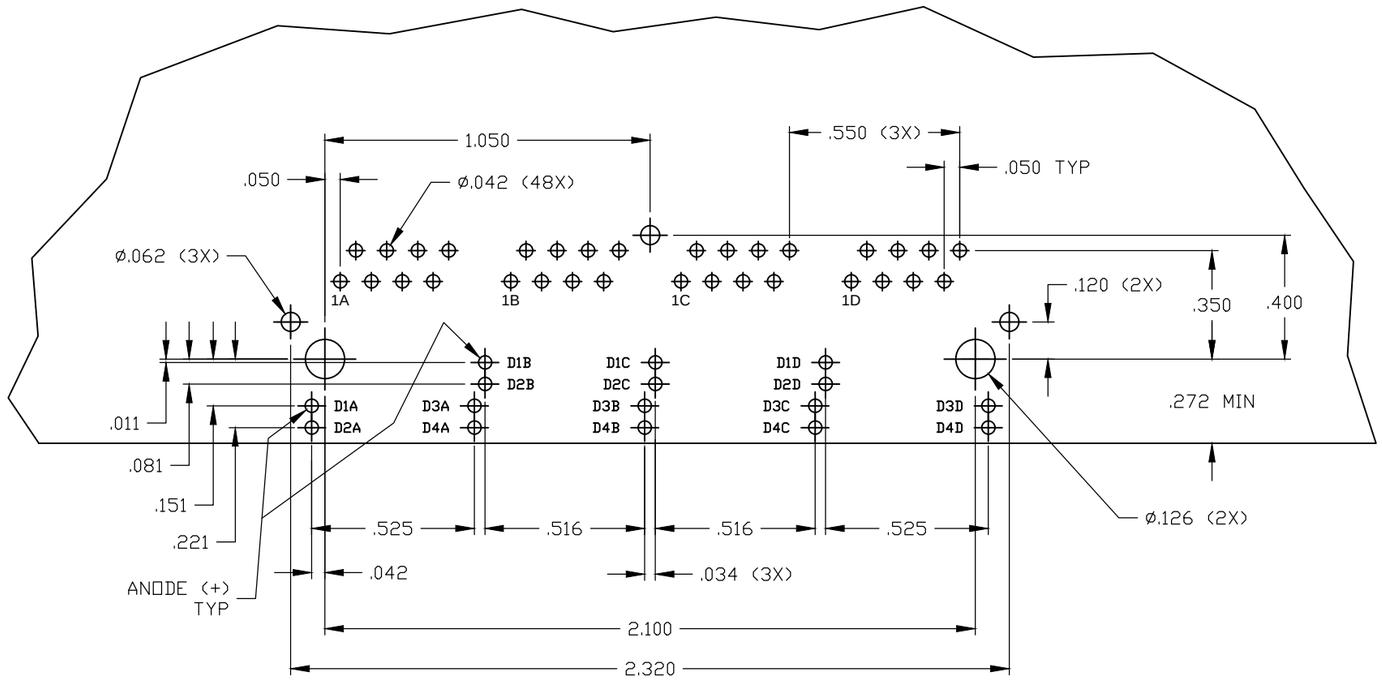

SUGGESTED PCB LAYOUT
(Component Side)

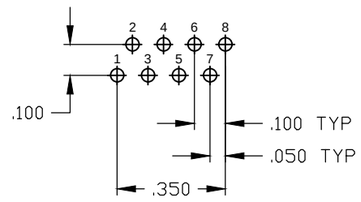

PIN DESIGNATIONS

THIS DRAWING IS A CONTROLLED DOCUMENT.	DWN 16MAR2005 C. ATTADIA – DOCK5	TRP connector Dongguan China	
DIMENSIONS: INCHES	CHK 16MAR2005 D. FAROLE		
TOLERANCES UNLESS OTHERWISE SPECIFIED: 0 PLC ± – 1 PLC ± – 2 PLC ± .010 3 PLC ± .005 4 PLC ± – ANGLES ± –	APVD 16MAR2005 D. FAROLE		
	PRODUCT SPEC 108–2100	NAME 1X4 MAG45(TM) MODULAR JACK, 7K1 SCHEMATIC, 746K1 MAGNETIC CIRCUIT, SHIELDED, DECOUPLING CAPACITOR, LEDS, S3 GROUND TABS	
	APPLICATION SPEC –	SIZE A1 / CAGE CODE 00779 / DRAWING NO C-6610176	RESTRICTED TO –
MATERIAL – / FINISH –	WEIGHT –		
	CUSTOMER DRAWING	SCALE 4:1 / SHEET 2 OF 2	REV E