THIS DRAWING IS UNPUBLISHED. RELEASED FOR PUBLICATION 20
© COPYRIGHT 20 BY TYCO ELECTRONICS CORPORATION. ALL RIGHTS RESERVED.

PART NUMBER	REV	TERMINATOR	FEED TYPE	DESCRIPTION
1528841-1	A	LEADMAKER	MECH POST FEED	CUTS CARRIER
1528841-2	A	BENCH	MECH PRE FEED	CUTS CARRIER
1528841-6	A	LEADMAKER	MECH POST FEED	CONTINUOUS CARRIER
7-1528841-1	A	LEADMAKER	MECH POST FEED	-1 AND SPARE PARTS
7-1528841-2	A	BENCH	MECH PRE FEED	-2 AND SPARE PARTS
7-1528841-6	A	LEADMAKER	MECH POST FEED	-6 AND SPARE PARTS
7-1528841-7	A	-	-	SPARE PARTS KIT

SET UP GAGE 458637-3

LOC	DIST
A	66

REVISIONS

P	LTR	DESCRIPTION	DATE	DWN	APVD
	A	SEE ECO-07-028354	29NOV2007	LJL	MC

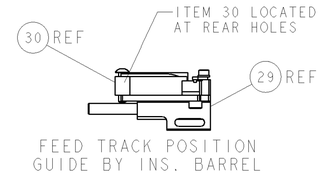

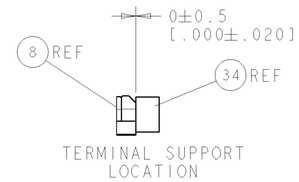

CRIMP DATA		FCI TERMINAL	FCI CRIMP SPECS 5
TERMINAL NAME: SICMA 3 1.5 X 0.8 MALE TERMINAL			
CRIMP	SIZE	TYPE	RANGE
WIRE	2.24 [.088 IN]	F	1.00-2.00mm² 6
INSUL	2.49 [.098 IN]	OV	1.65-2.60 [.067-.102 IN] 6
WIRE STRIP LENGTH 4.10-4.90 [.161-.193 IN]			APPL INSTRUCTIONS 408-8322 & 408-8490
TERMINAL APPL SPEC	FCI DRGS. 8 - PC211CL2SX160 & 211FT0300		FEED 10.50 [.413 IN]

TERMINALS APPLIED

TE TERM PN	MANUF TERM PN	-	-
1949170-1	211 CL 2 S 2160	-	-
-	-	-	-
-	-	-	-
-	-	-	-

WIRE SIZE	CRIMP HEIGHT *	REF SETTING *
2.00mm² 7	1.59 ±0.04 [.063 ±.0016 IN]	C 4
1.50mm² 7	1.54 ±0.04 [.061 ±.0016 IN]	C 7
1.00mm² 7	1.44 ±0.04 [.057 ±.0016 IN]	D 5
-	-	-
-	-	-
-	-	-
-	-	-
-	-	-
-	-	-
-	-	-
-	-	-
-	-	-

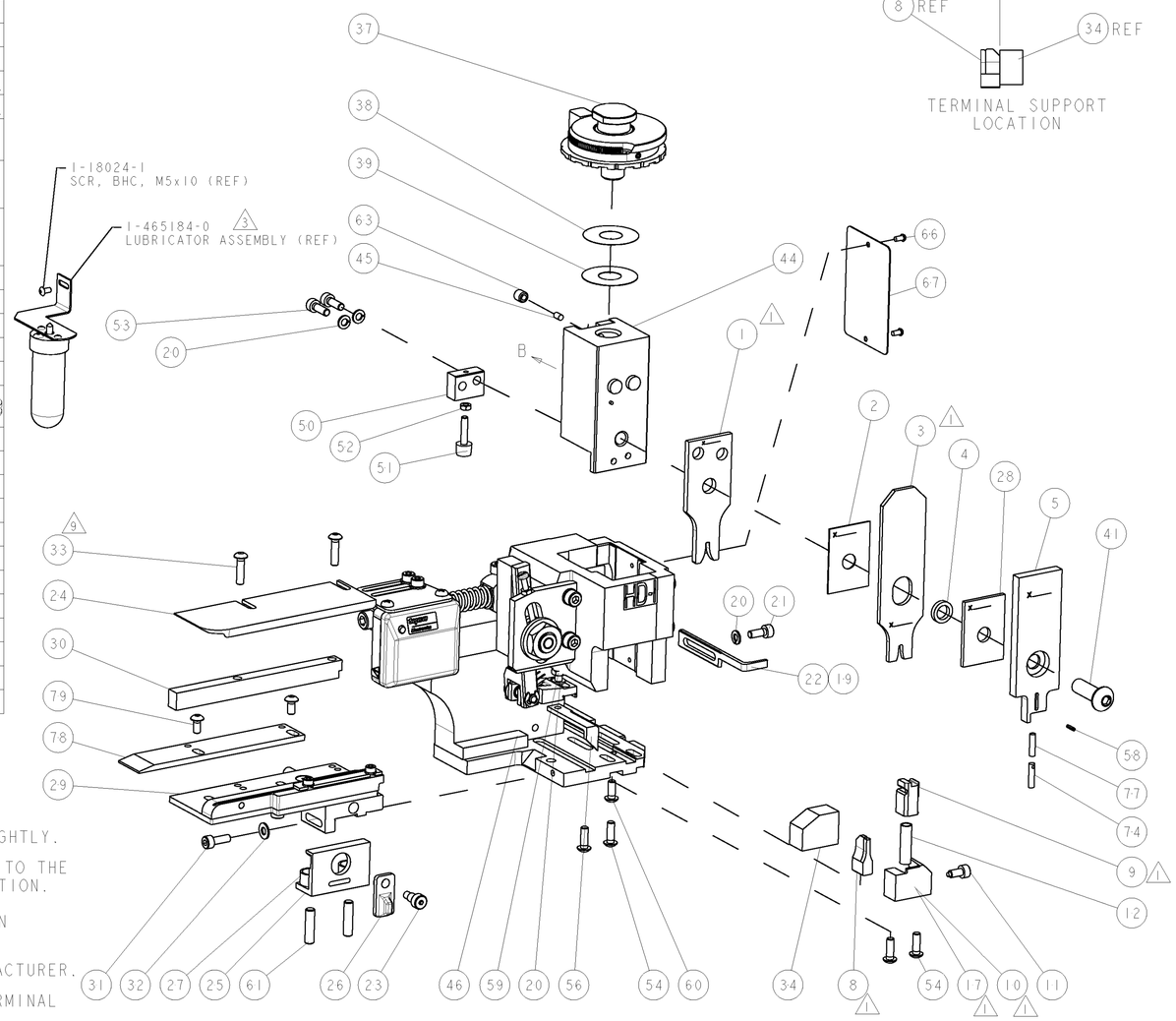

1 RECOMMENDED SPARE PARTS.

2. GREASE RAM, CAM, CAM FOLLOWER AND FEED ROD LIGHTLY.

3 CERTAIN TERMINALS REQUIRE LUBRICATION. REFER TO THE APPLICATOR INSTRUCTION SHEET FOR MORE INFORMATION.

4. LUBRICATE DAILY PER THE APPLICATOR INSTRUCTION SHEET SUPPLIED WITH THE APPLICATOR.

5 ALL CRIMP DATA SUPPLIED BY THE TERMINAL MANUFACTURER.

6 WIRE AND INSULATION RANGES ARE THAT OF THE TERMINAL

7 SEE APPLICATION SPECIFICATION DRGS. FOR RELEVANT WIRE SIZE DETAILS.

8 INSULATION CRIMP HEIGHTS NOT RECOMMENDED BY TYCO ELECTRONICS UK LTD.

9 CUT TO LENGTH AT ASSEMBLY.

* WARNING
ON INSTALLATION, SET WIRE DISC TO LARGEST WIRE SIZE SETTING. USE OF SETTINGS BELOW MIN. REQUIRED CRIMP HEIGHT SETTING WILL CAUSE DAMAGE TO CRIMP TOOLING.

VIEW B ROTATED 180°

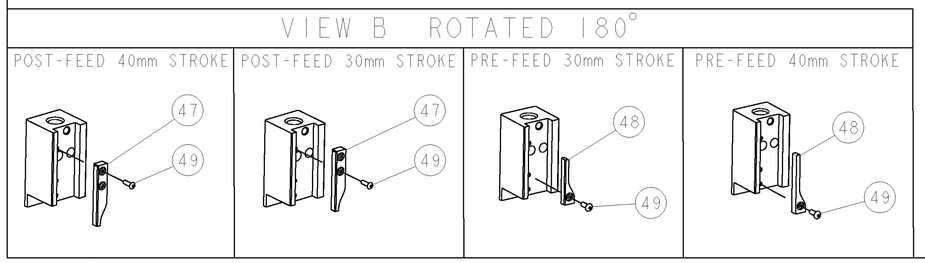

-77	-76	-72	-71	-6	-2	-1	PART NO	DESCRIPTION	ITEM NO
-	-	-	-	-	-	-	-	-	84
-	-	-	-	-	-	-	-	-	83
-	-	-	-	-	-	-	-	-	82
-	-	-	-	-	-	-	-	-	81
-	-	-	-	-	-	-	-	-	80
-	2	2	2	2	2	2	18024-6	SCR, BTN SKT HD CAP (M4 X 8.0)	79
-	1	1	1	1	1	1	525891-1	EXTENSION PLATE STRIP GUIDE ASSEMBLY	78
-	1	1	1	1	1	1	1-22278-0	SPRING, COMPRESSION	77
-	-	-	-	-	-	-	-	-	76
-	-	-	-	-	-	-	-	-	75
-	1	1	1	1	1	1	854769-1	HOLDER, INS	74
-77	-76	-72	-71	-6	-2	-1	PART NO	DESCRIPTION	ITEM NO

-77	-76	-72	-71	-6	-2	-1	PART NO	DESCRIPTION	ITEM NO
-	-	-	-	-	-	-	-	-	73
-	-	-	-	-	-	-	-	-	72
-	1	1	1	1	1	1	1338705-3	DOCUMENTATION PACKAGE	71
-	-	-	-	-	-	-	-	-	70
-	-	-	-	-	-	-	-	-	69
-	-	-	-	-	-	-	-	-	68
-	1	1	1	1	1	1	461264-5	PLATE, IDENTIFICATION	67
-	2	2	2	2	2	2	21017-2	SCREW, DRIVE	66
-	-	-	-	-	-	-	-	-	65
-	-	-	-	-	-	-	-	-	64
-	1	1	1	1	1	1	3-18031-0	SCR, SET, CUP POINT M6 X 6.0	63
-	-	-	-	-	-	-	-	-	62
-	2	2	2	2	2	2	2-18032-5	SCR, SET, FLT POINT M5 X 20.0	61
-	1	1	1	1	1	1	18024-7	SCR, BTN SKT HD CAP (M4 X 10.0)	60
-	1	1	1	1	1	1	5-18022-2	SCR, HEX HD CAP M4 X 8.0	59
-	1	1	1	1	1	1	21028-2	PIN, SLOTTED SPRING .062 X .250	58
-	-	-	-	-	-	-	-	-	57
-	1	1	1	1	1	1	1338685-1	PAWL, FEED	56
-	-	-	-	-	-	-	-	-	55
-	4	4	4	4	4	4	18024-8	SCR, BTN SKT HD CAP (M4 X 12.0)	54
-	2	2	2	2	2	2	1-18023-2	SCR, SKT HD CAP M4 X 12.0	53
-	1	1	1	1	1	1	18030-1	NUT, HEX, REG M3	52
-	1	1	1	1	1	1	811242-5	BUMPER, HOLD DOWN	51
-	1	1	1	1	1	1	690753-2	SPACER, TONKER	50
-	1	1	1	1	1	1	18024-3	SCR, BTN SKT HD CAP (M3 X 10.0)	49
-	-	1	-	-	1	-	1338675-1	CAM, UNIVERSAL PRE FEED	48
-	1	-	1	1	-	1	1338676-1	CAM, UNIVERSAL POST-FEED	47
-	1	1	1	1	1	1	1320999-3	APPLICATOR SUBASSEMBLY, HDI	46
-	1	1	1	1	1	1	690191-1	PLUG,NYLON	45
-	1	1	1	1	1	1	1338660-1	RAM	44
-	-	-	-	-	-	-	-	-	43
-	-	-	-	-	-	-	-	-	42
-	1	1	1	1	1	1	2-18024-6	SCR, BTN SKT HD CAP (M8 X 25.0)	41
-	-	-	-	-	-	-	-	-	40
-	1	1	1	1	1	1	690125-1	SHIM SUB-ASSY	39
-	1	1	1	1	1	1	469367-2	SHIM	38
-	1	1	1	1	1	1	879103-2	FINE ADJUST HEAD ASSEMBLY	37
-	-	-	-	-	-	-	-	-	36
-	-	-	-	-	-	-	-	-	35
-	1	1	1	1	1	1	1320934-6	SUPPORT, TERMINAL	34
9 -	2	2	2	2	2	2	18024-9	SCR, BTN SKT HD CAP (M4 X 16.0)	33
-	1	1	1	1	1	1	18027-2	WASHER, FLAT, REG M4	32
-	1	1	1	1	1	1	1-18023-2	SCR, SKT HD CAP M4 X 12.0	31
-	1	1	1	1	1	1	1-1320908-6	SPACER, STRIP GUIDE	30
-	1	1	1	1	1	1	1633073-2	STRIP GUIDE ASSEMBLY	29
-	1	1	1	1	1	1	2-455888-0	SPACER, CRIMPER	28
-	2	2	2	2	2	2	1-22284-0	SPRING, COMPRESSION	27
-	1	1	1	1	1	1	356835-1	LEVER, DRAG RELEASE	26
-	1	1	1	1	1	1	240792-1	DRAG, TERMINAL	25
-	1	1	1	1	1	1	1320928-5	PLATE, STRIP GUIDE	24
-	1	1	1	1	1	1	980371-4	SCR, SKT HD SHLDR 5.0 DIA X 6.0	23
-	1	-	1	1	-	1	690472-2	STRIPPER	22
-	1	1	1	1	1	1	1-18023-1	SCR, SKT HD CAP M4 X 10.0	21
-	4	4	4	4	4	4	18025-2	WASHER, SPRG LOCK, REG M4	20
-	-	1	-	-	1	-	690472-1	STRIPPER	19
-	-	-	-	-	-	-	-	-	18
1 -	1	-	-	1	-	-	1338684-1	SHEAR HOLDER, FRONT	17
-	-	-	-	-	-	-	-	-	16
-	-	-	-	-	-	-	-	-	15
-	-	-	-	-	-	-	-	-	14
-	-	-	-	-	-	-	-	-	13
-	1	1	1	1	1	1	3-22280-3	SPRING, COMPRESSION	12
-	1	1	1	1	1	1	356885-4	STOP, SHEAR	11
1 -	-	1	1	-	1	1	1320921-1	SHEAR HOLDER, FRONT, CUT	10
1 -	1	1	1	1	1	1	1-454276-9	FLOATING SHEAR, FRONT	9
1 1	2	2	2	1	1	1	7-1633138-1	ANVIL, COMBINATION	8
-	-	-	-	-	-	-	-	-	7
-	-	-	-	-	-	-	-	-	6
-	1	1	1	1	1	1	854772-1	DEPRESSOR, SHEAR	5
-	1	1	1	1	1	1	238011-4	BLOCK, CRIMPER SPACER	4
1 1	2	2	2	1	1	1	9-854830-8	CRIMPER, INSULATION SPECIAL	3
-	1	1	1	1	1	1	455888-5	SPACER, CRIMPER	2
1 1	2	2	2	1	1	1	4-1673600-0	CRIMPER, WIRE	1

THIS DRAWING IS A CONTROLLED DOCUMENT FOR TYCO ELECTRONICS CORPORATION. IT IS SUBJECT TO CHANGE AND THE CONTROLLING ENGINEERING ORGANIZATION SHOULD BE CONTACTED FOR THE LATEST REVISION.

DWN 31OCT2007 L.LOFTHOUSE
CHK -
APVD 31OCT2007 M.CLIFFORD
PRODUCT SPEC -
APPLICATION SPEC -
See Table
WEIGHT -

DIMENSIONS: mm [IN]

TOLERANCES UNLESS OTHERWISE SPECIFIED:
0 PLC ±-
1 PLC ±-
2 PLC ±-
3 PLC ±-
4 PLC ±-
ANGLES ±-

MATERIAL - -
FINISH - -

Tyco Electronics
Tyco Electronics
Harrisburg, PA 17105-3608

NAME FINE ADJUST SIDE FEED HDI APPLICATOR -

SIZE	CAGE CODE	DRAWING NO	RESTRICTED TO
A1	00779	C-1528841	-

CUSTOMER DRAWING | SCALE 3:5 | SHEET 1 OF 1 | REV A

AMP 4805 REV 31MAR2000

Pro/ENGINEER DRAWING