REV.	ECN NO. OR DESCRIPTION	REVISED	DATE
A	PDR NO.T090203-1A	Sky	2009.03.16
B	ECN NO.S090705	LILI	2009.07.07

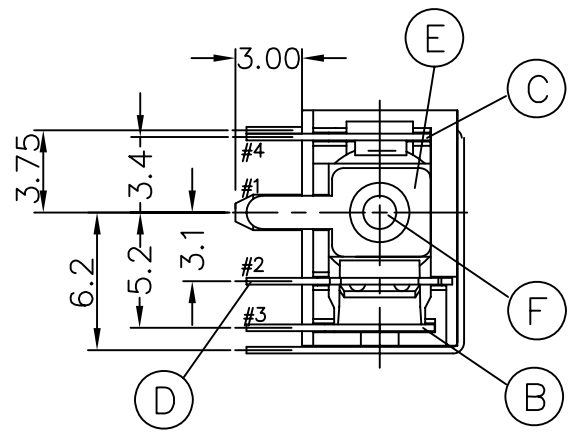

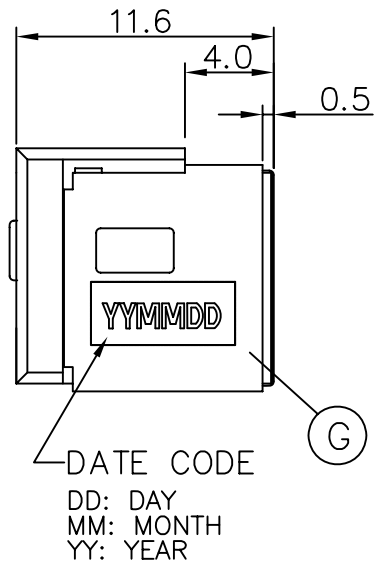

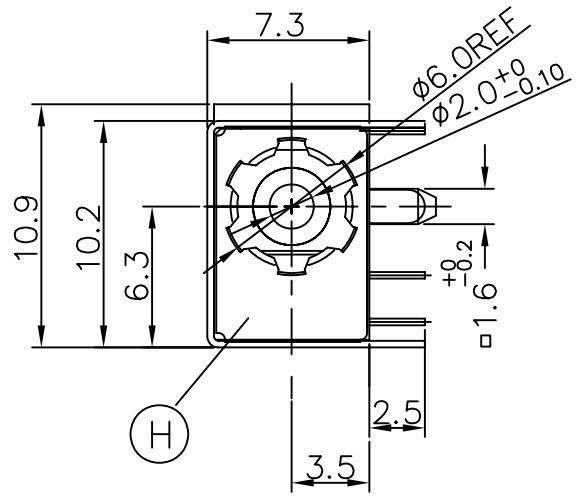

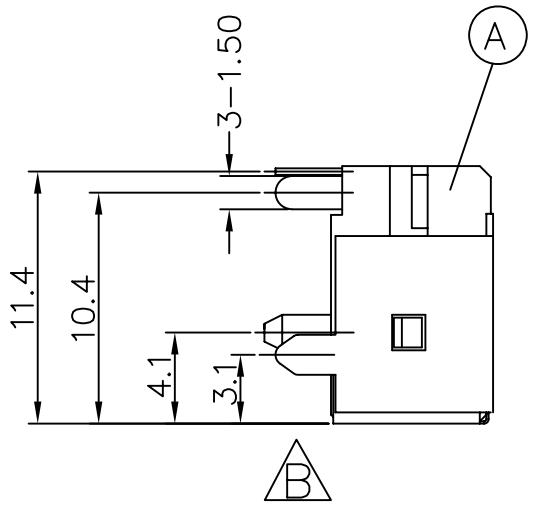

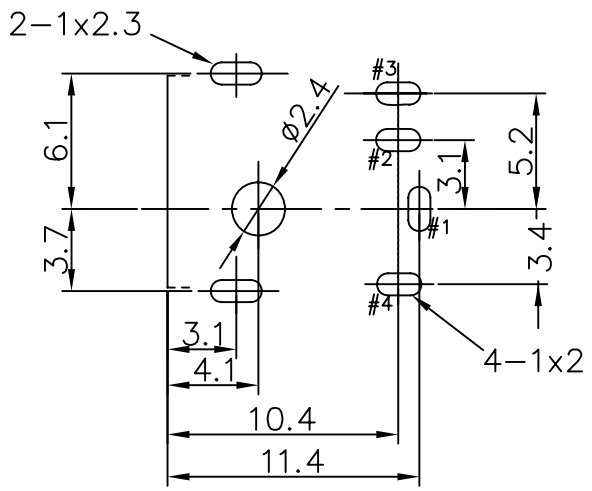

RECOMMEND P.C.B LAYOUT
TOP VIEW(TOL.±0.05)

SPECIFICATIONS:
1.RATING: DC 20V 7A
2.INSERTION FORCE: 3.5KG Max.
WITHDRAWAL FORCE: 0.4~3.5KG
3.INSULATION RESISTANCE BETWEEN ANY ADJACENT TERMINALS SHALL NOT BE LESS THAN 100 MEGOHMS BY 500 VOLTS MEGGER.
4.JACK SHALL WITHSTAND 250 VOLTS BETWEEN ANY ADJACENT TERMINAL FOR ONE MINUTE.
5.CONTACT RESISTANCE SHALL NOT EXCEED 30mΩ.
6.JACK SHALL WITHSTAND 5,000 CYCLES OF INSERTION AND WITHDRAWAL WITH TESTING PLUG,AND CONTACT RESISTANCE SHALL NOT EXCEED 60mΩ.
7.MEASURING CONDITION:
TEMPERATURE: FROM 5°C TO 35°C.
RELATIVE HUMIDITY: FROM 40% TO 85%
8.ENVIRONMENTAL SPECIFICATIONS:
8.1 HUMIDITY TEST: HUMIDITY 90% TO 95% TEMPERATURE 40°C ± 2°C FOR 96 HOURS.
8.2 HEAT TEST: TEMPERATURE 70°C ± 2°C (HUMIDITY BELOW 50%) FOR 96 HOURS.
8.3 COLD TEST: TEMPERATURE -40°C ± 2°C FOR 96 HOURS.
9.SOLDERABILITY TEST: THE TERMINATION IS AT LEAST 95% COVERED BY A CONTINUOUS NEW SOLDER COATING.
TEST CONDITION: DIP IN MOLTEN SOLDER FOR 5 Sec. AT 245±5°C
(TERMINATION SHALL BE IMMERSED IN FLUX BEFORE TEST)
10.PACKAGING: TAPPING REEL
11.TO CONFORM TO SINGATRON HAZARDOUS SUBSTANCE FREE SPECIFICATION.
12.HALOGEN FREE PRODUCT IDENTIFICATION MARK ON JACK: ◎
13.HALOGEN FREE PRODUCT IDENTIFICATION LABEL ON PACKAGING:
14.FOR REFLOW SOLDERING LEAD-FREE PROCESS.

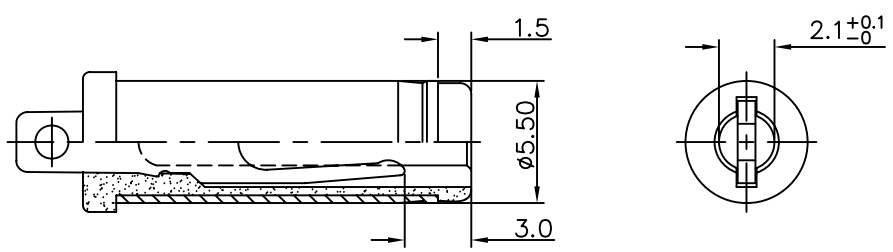

MATING PLUG ø5.50

SCHEMATIC

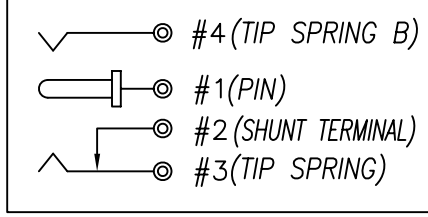

NO	DESCRIPTION	QTY	MATERIAL	PLATING & COLOR
H	GROUNDING SPRING	1	STAINLESS 0.1T	N/A
G	SHIELDING	1	BRASS STRIP 0.3T	Ni 60u'' Min.
F	PIN	1	BRASS BAR	Ni 60u'' Min.
E	TERMINAL	1	BRASS STRIP 0.3T	Ag 20u" OVER Ni 20u"
D	SHUNT TERMINAL	1	BRASS STRIP 0.3T	Ag 20u" OVER Ni 20u"
C	TIP SPRING B	1	COPPER ALLOY 0.25T	Ag 20u" OVER Ni 20u"
B	TIP SPRING A	1	COPPER ALLOY 0.3T	Ag 20u" OVER Ni 20u"
A	BODY	1	HIGH TEMP. THERMOPLASTIC UL 94V-0	BLACK

UNLESS OTHERWISE SPECIFED TOLERANCES

Singatron Enterprise Co., Ltd.
信音企業股份有限公司

DECIMALS: X :±0.5 X.X :±0.3 X.XX :±0.2
ANGLES: X :±2° X.X :±1°

TITLE	DC POWER JACK		
DWN	LILI	PART NO. 2DC-G726-D09	
CHKD	BOYE	SCALE:4:1	UNIT: mm
APVD	MAX	SIZE: A3	SHEET:1 OF 1 REV:B

CUSTOMER COPY

文件編號 RD-06-043-A