THIS DRAWING IS UNPUBLISHED. RELEASED FOR PUBLICATION 20
© COPYRIGHT 20 BY TYCO ELECTRONICS CORPORATION, ALL RIGHTS RESERVED.

LOC	DIST
CE	00

REVISIONS

P	LTR	DESCRIPTION	DATE	DWN	APVD
	B2	REVISE NOTE 2	12MAR2009	BB	SB
	C	REVISED PER ECR 10-007692	06MAY2010	DLF	CB

1. MATERIAL: PROTECTIVE COVER: TPE, COLOR: BLACK, UL94 V-0*
   FERRULE SUB ASSEMBLY: ZIRCONIA/METAL.
   COMPRESSION SPRING: STAINLESS STEEL.
   HOUSING: PPSU, COLOR:SEE DASH NO'S.
   INNER TUBING: PTFE, COLOR: CLEAR, UL VW-1.
   REAR BODY: METAL
   BOOT: TPE, COLOR:BLUE, UL94 V-0*
   *RATED AT QUALIFYING THICKNESS.

2. INSTRUCTION SHEET: 408-8675 AVAILABLE FOR DOWNLOAD AT
   www.tycoelectronics.com/documents OR www.ampnetconnect.com/foguide.

3. BLACK DOT SIGNIFIES SINGLEMODE.

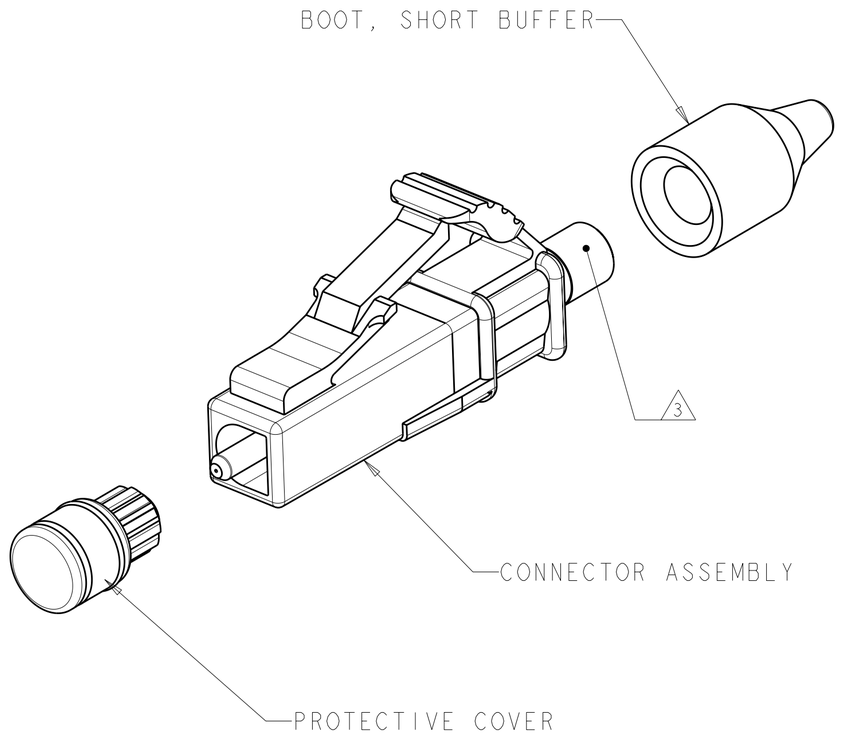

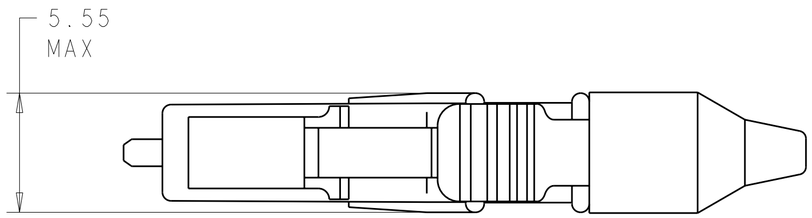

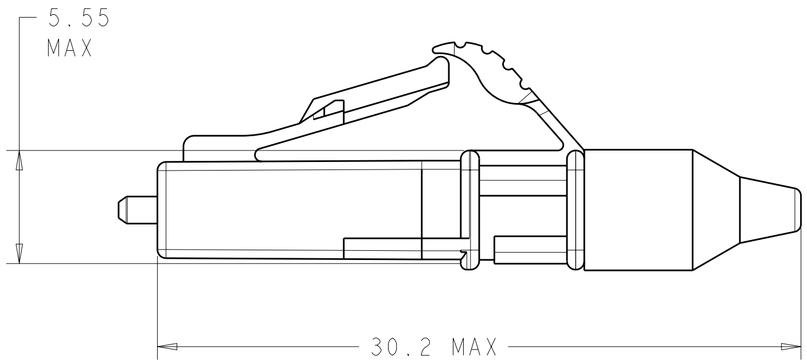

COLOR	PART NO
SLATE	1-1828862-0
ORANGE	1828862-9
VIOLET	1828862-8
BROWN	1828862-7
AQUA	1828862-6
ROSE	1828862-5
BLUE	1828862-4
GREEN	1828862-3
YELLOW	1828862-2
RED	1828862-1

THIS DRAWING IS A CONTROLLED DOCUMENT FOR TYCO ELECTRONICS CORPORATION. IT IS SUBJECT TO CHANGE AND THE CONTROLLING ENGINEERING ORGANIZATION SHOULD BE CONTACTED FOR THE LATEST REVISION.

DIMENSIONS: mm

TOLERANCES UNLESS OTHERWISE SPECIFIED:
0 PLC ±-
1 PLC ±0.1
2 PLC ±0.01
3 PLC ±-
4 PLC ±-
ANGLES ±-

MATERIAL 1 -

FINISH -

DWN D. ERDMAN 22FEB2006
CHK M GURRERI 22FEB2006
APVD D BAECHTLE 22FEB2006
PRODUCT SPEC -
APPLICATION SPEC -
WEIGHT -

Tyco Electronics
Tyco Electronics
Harrisburg, PA 17105-3608

NAME KIT, CONNECTOR, LC SECURE. SIMPLEX, SM, 900um BUFFER

SIZE	CAGE CODE	DRAWING NO	RESTRICTED TO
A2	00779	C-1828862	

CUSTOMER DRAWING | SCALE 5:1 | SHEET 1 OF 1 | REV C

AMP 1471-9 REV 31MAR2000

Pro/ENGINEER DRAWING