Crystal Units
Surface Mount Type CX3225SB (CX-101F)

KYOCERA

3.2×2.5mm for Consumer Products

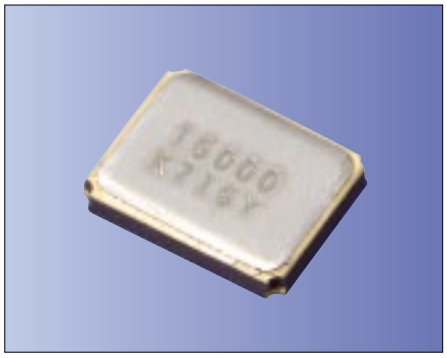

RoHS Compliant

Features

- Crystal unit for Consumer Products
- Miniature and low profile (3.2×2.5×0.55mm)
- Ceramic package
- Reflow compatible
- AEC-Q200 qualified
  (Please contact us for Automotive use)

Applications

- Digital Electronics
- Consumer Products
- Car audio and accessories

How to Order

CX3225SB 12000 □□ □ □ □ □□
① ② ③ ④ ⑤ ⑥ ⑦

① Series
② Frequency
③ Load Capacitance

B0	6 pF	—
D0	8 pF	Std.
F0	10 pF	—

④ Frequency Stability

G	±15×10⁻⁶	Std.

⑤ Operating Temp. Range ⑥ Frequency Temp. Stability

EJ	−10 to +70°C	±15×10⁻⁶	Std.

⑦ Individual Specification

Packaging (Tape & Reel 3000/ 1000 pcs./ reel)

Specifications

Item	Symbol	Specification	Units	Remarks
Frequency Range	f_{nom}	12000 to 54000	kHz	
Overtone Order	OT	Fundamental	—	
Load Capacitance	CL	8	pF	
Frequency Stability	f_{tol}	±15	$\times 10^{-6}$	25°C±3°C
Motional Series Resistance	R1	Table 1	ohm	
Drive Level	DL	Table 2	µW	
Operating Temp. Range	T_{use}	−10 to +70	°C	
Storage Temp. Range	T_{stg}	−40 to +85	°C	
Frequency Temp. Characteristics	f_{tem}	±15	$\times 10^{-6}$	Freq. deviation from the value at 25°C

• Please contact us for other specifications.

Typical Frequencies and Part Numbers

Frequency (kHz)	Part Number
12000.000	CX3225SB12000D0GEJZ1
13560.000	CX3225SB13560D0GEJZ1
14318.180	CX3225SB14318D0GEJZ1
14745.600	CX3225SB14745D0GEJZ1
16000.000	CX3225SB16000D0GEJZ1
18432.000	CX3225SB18432D0GEJZ1
20000.000	CX3225SB20000D0GEJZ1
22579.200	CX3225SB22579D0GEJZ1
24000.000	CX3225SB24000D0GEJZ1
24576.000	CX3225SB24576D0GEJZ1
25000.000	CX3225SB25000D0GEJZ1
26000.000	CX3225SB26000D0GEJZ1
27000.000	CX3225SB27000D0GEJZ1
27120.000	CX3225SB27120D0GEJZ1
30000.000	CX3225SB30000D0GEJZ1
33000.000	CX3225SB33000D0GEJZ1
33333.000	CX3225SB33333D0GEJZ1
40000.000	CX3225SB40000D0GEJZ1
48000.000	CX3225SB48000D0GEJZ1
54000.000	CX3225SB54000D0GEJZ1

Table1 Motional Series Resistance

Frequency Range	Motional Series Resistance
12000 to 12999kHz	200Ω max.
13000 to 14999kHz	150Ω max.
15000 to 15999kHz	100Ω max.
16000 to 19999kHz	80Ω max.
20000 to 26999kHz	50Ω max.
27000 to 54000kHz	40Ω max.

Table2 Level of Drive

Frequency Range	Level of Drive
12000 to 54000kHz	10µW (100µW max.)

Dimensions

(Unit: mm)

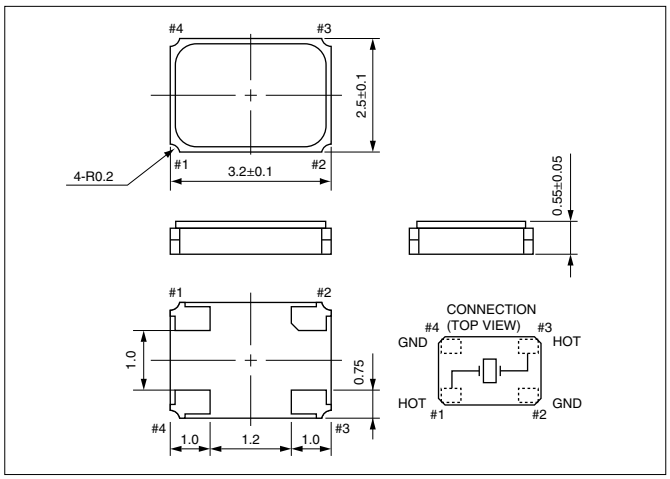

Recommended Land Pattern
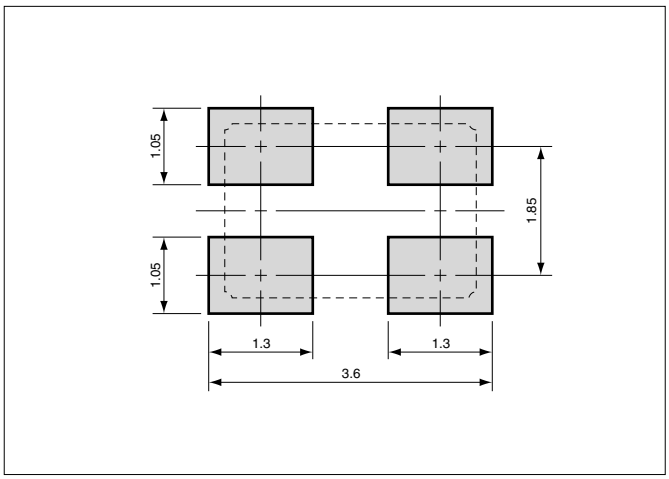
(Unit: mm)