PART NAME	JUNCTION BOX w/ HINGED COVER & KNOCKOUTS	PART No.	JBH-4958-KO	REVISION DATE	7-18-11

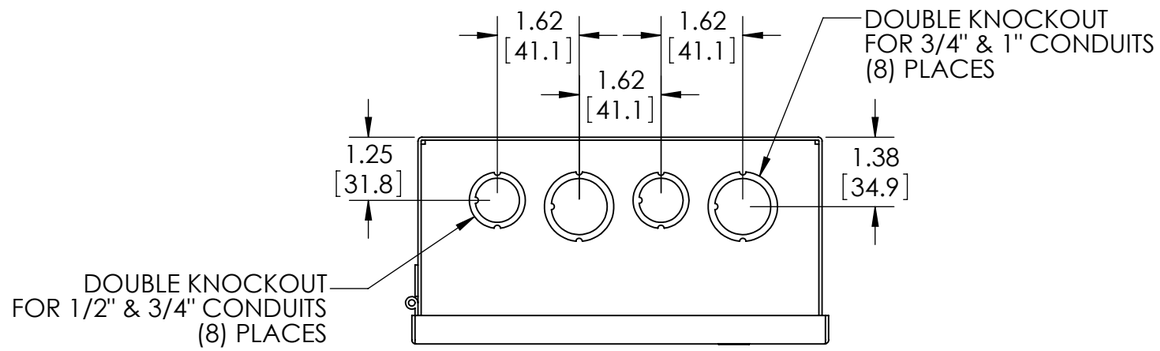

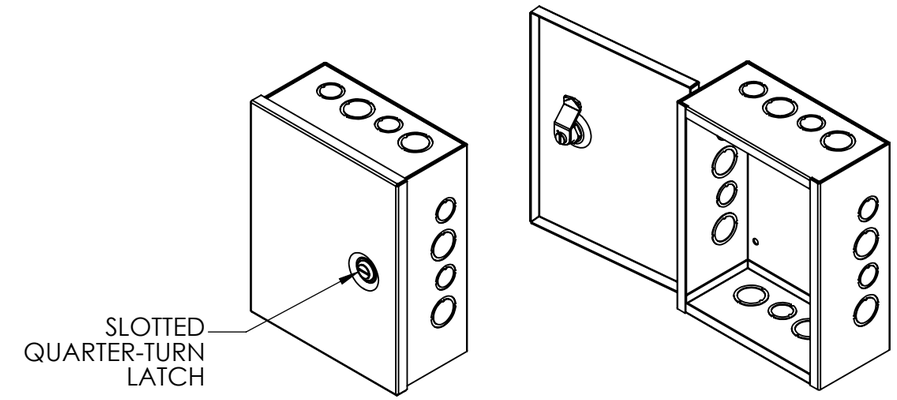

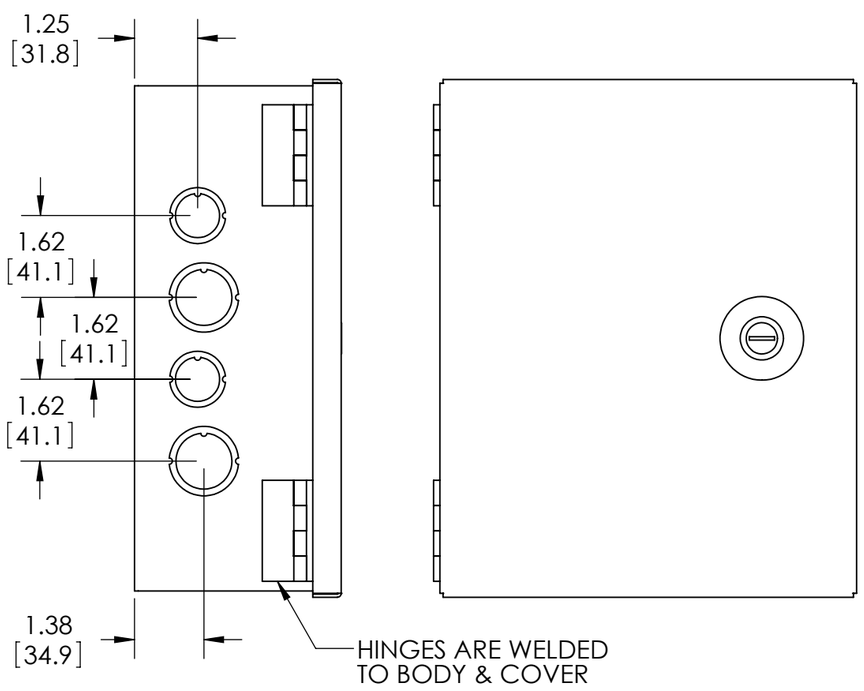

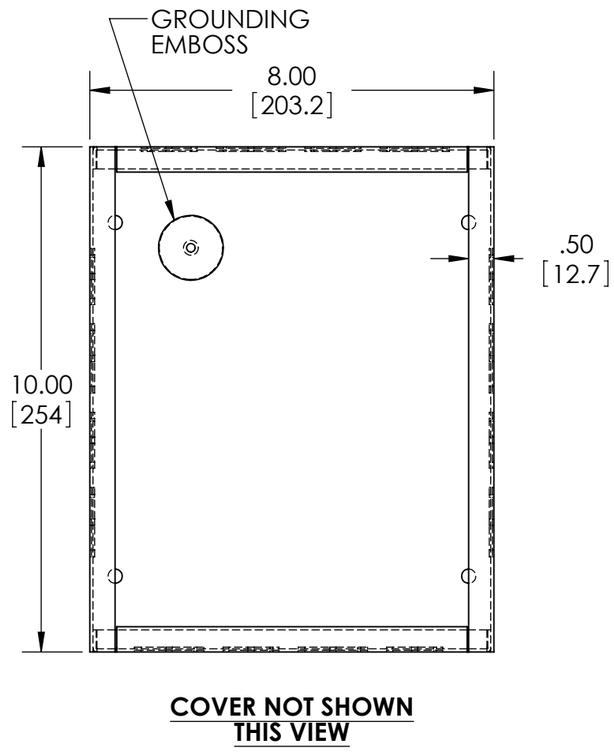

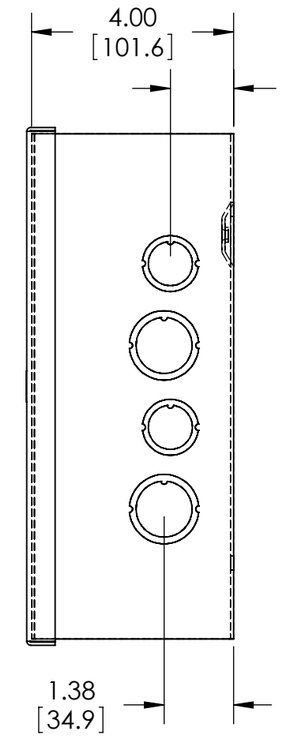

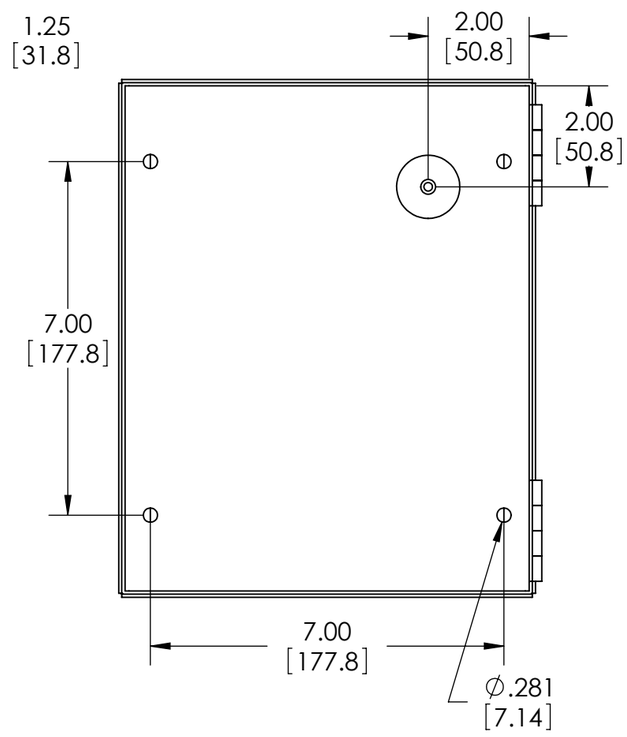

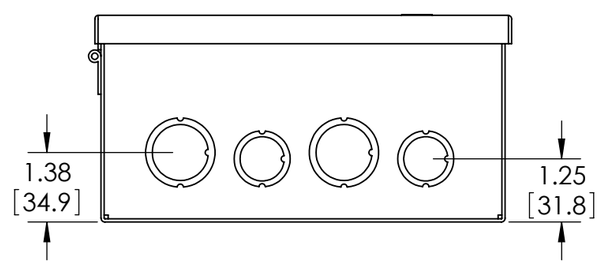

MATERIAL - 16 GA. [1.5mm] STEEL

FINISH - SMOOTH GRAY POWDERCOAT

INCLUDES ONE (1) #10-32 x .31"[8mm] LG. MACHINE, PAN HEAD, SLOTTED/SQUARE COMBINATION STYLE DRIVE, STEEL, ZINC PLATED SCREW FOR GROUND POINT.