No.	Changes and/or Note No.	Date	Intr.	No.	Changes and/or Note No.	Date	Intr.

MATERIALS:
PLASTIC HOUSING: ENGINEERING THERMOPLASTIC
FLAMMBILITY RATING UL 94V-0.
CONTACTS: 0.46MM DIAMETER PHOSPHOR BRONZE
PLATING: GOLD PLATING OVER NICKEL

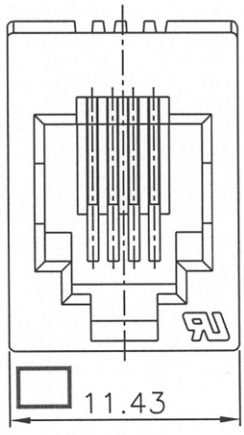

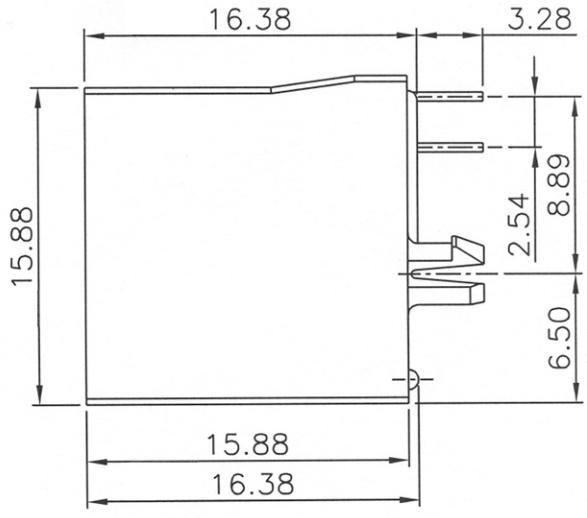

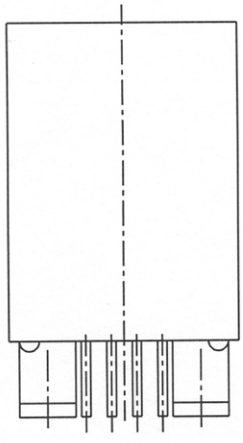

PCB LAYOUT/TOP VIEW

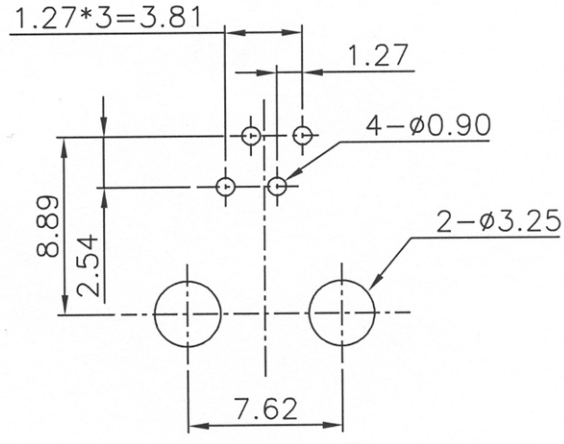

3u" P/N 3002041000
6u" P/N 3002041100
15u" P/N 3002041200
30u" P/N 3002041300
50u" P/N 3002041400

DATE	DRAWN	SCALE	MATERIAL TYPE
040609	MRR	1:1	
	APPROVED		REPLACES

MH CONNECTORS

MHRJJ44NFV

DRAWING No 133