MICRO SWITCH
a Honeywell Division
FED.MFG.CODE 91929

SWITCH – BASIC

CATALOG LISTING
BZ–2R5528–S

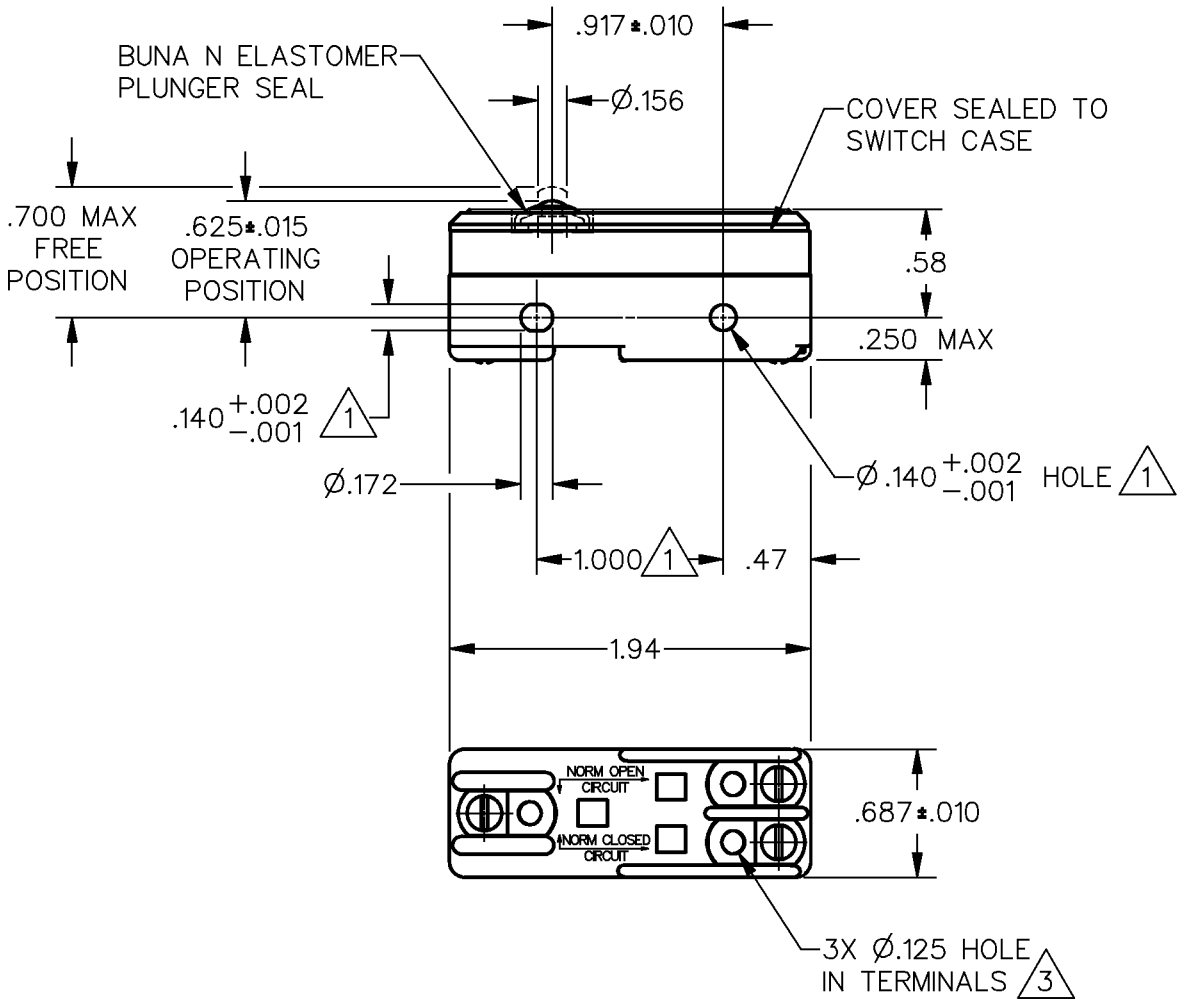

NOTES

(1) MOUNTING HOLES WILL ACCEPT PINS OR SCREWS OF Ø.139 MAX ON 1.000±.002 CENTERS

2 – SEALED CONSTRUCTION PROVIDES SPLASH RESISTANCE

(3) TERMINALS FORMED AT (15°) TO BOTTOM OF SWITCH

ANSI Y14.5M–1982 APPLIES

THIS DRAWING COVERS A PROPRIETARY ITEM AND IS THE PROPERTY OF MICRO SWITCH, A DIVISION OF HONEYWELL. THIS DRAWING IS NOT TO BE COPIED OR USED WITHOUT THE APPROVAL OF MICRO SWITCH.

THIRD ANGLE PROJECTION

CHARACTERISTICS

OPERATING FORCE — — — — 9–15 OZ
RELEASE FORCE — — — — 4 OZ MIN
DIFFERENTIAL TRAVEL ---.0004–.0025
OVERTRAVEL — — — — — — .005 MIN

ELECTRICAL DATA

CONTACT ARRANGEMENT
S P D T

L74	15A 125, 250 OR 480 VAC
L288	2A 600 VAC
L299	1/8HP 125 VAC, 1/4HP 250 VAC
L306	1/2A 125 VDC, 1/4A 250 VDC
	16A 250V ∿ T85 5E4

SCALE FULL — DO NOT SCALE PRINT

UNLESS OTHERWISE SPECIFIED TOLERANCES ARE

ONE PLACE	(.0)	±.030
TWO PLACE	(.00)	±.015
THREE PLACE	(.000)	±.005
ANGLES		±

WEIGHT .053 LBS

CATALOG LISTING BZ–2R5528–S
PAGE 1 OF 1
ISSUE 3
REPLACES X100218–BZ
RELEASE NO. PR–21910

REVISIONS
A CO–93074 CCK 15 JUN 98
B CO–94212–K DLT 4 NOV 99

DRAWN KDR 10 NOV 95
CHECK
MAM 13 NOV 95
CHECK
CHECK

FORMTEK

Mouser Electronics

Authorized Distributor

Click to View Pricing, Inventory, Delivery & Lifecycle Information:

Honeywell:
BZ-2R5528-S