THIS DRAWING IS UNPUBLISHED. RELEASED FOR PUBLICATION ?,? .
© COPYRIGHT ? By Tyco Electronics Japan G.K. ALL RIGHTS RESERVED.

REVISIONS
変更

P	LTR	DESCRIPTION	DATE	DWN	APVD
	G	ECR-16-003360	07MAR2017	WL	SY

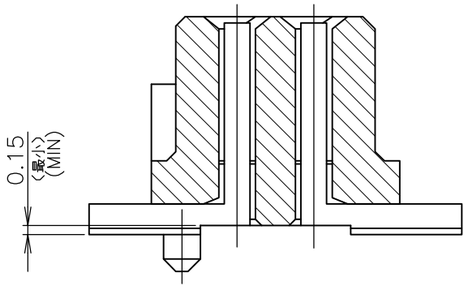

SECT "B"-"B"

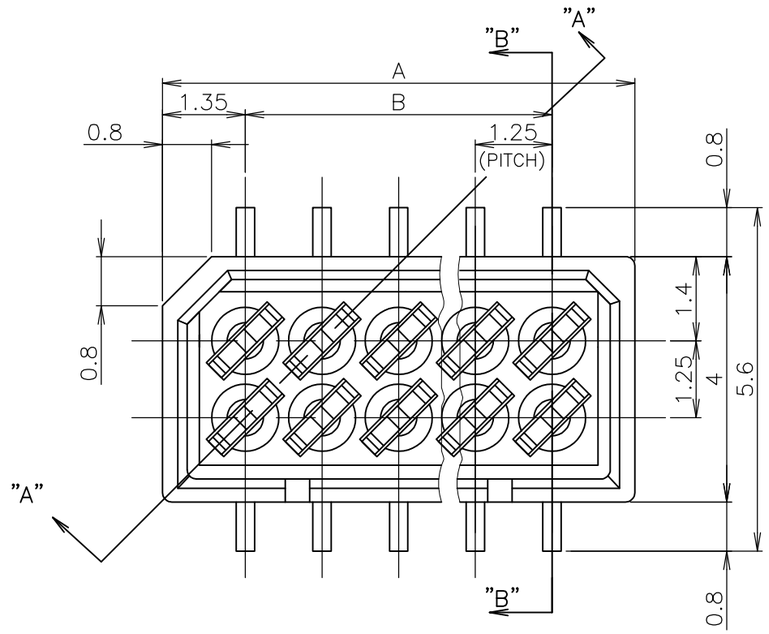

1 嵌合相手製品型番及び、嵌合時寸法は
MATING COUNTER PART NUMBER AND DIMENSIONS
表-1 参照のこと。
AFTER MATING: SEE TABLE 1.

嵌合時寸法: 巾(mm)×高さ(mm)
DIMENSIONS AFTER MATING : WIDE(mm) x HEIGHT(mm)

	MATING COUNTER CONN 嵌合相手側コネクタ POST HDR ASSY 製品型番 P/N	高さ H	REC HDR ASSY SMT V TYPE WITH BOSS X-176311-X
DIP TYPE	X-174643-X	3.95	5.6 (巾W) x 5.0 (高さH)
		5.95	5.6 (巾W) x 7.0 (高さH)
	X-176320-X	8.85	5.6 (巾W) x 10.0 (高さH)
	X-176871-X	9.85	5.6 (巾W) x 11.0 (高さH)
SMT TYPE	ボス無 WITHOUT BOSS X-174645-X ボス付 WITH BOSS X-176769-X	3.95	5.6 (巾W) x 5.0 (高さH)
	ボス無 WITHOUT BOSS X-174621-X ボス付 WITH BOSS X-176140-X	5.45	5.6 (巾W) x 6.5 (高さH)
	ボス無 WITHOUT BOSS X-174645-X ボス付 WITH BOSS X-174821-X	5.95	5.6 (巾W) x 7.0 (高さH)
	ボス無 WITHOUT BOSS X-178041-X ボス付 WITH BOSS X-176757-X	6.85	5.6 (巾W) x 8.0 (高さH)
	ボス無 WITHOUT BOSS X-176769-X ボス付 WITH BOSS X-176140-X	8.85	7.0 (巾W) x 10.0 (高さH)
	ボス無 WITHOUT BOSS X-178041-X ボス付 WITH BOSS X-176757-X	9.35	7.0 (巾W) x 10.5 (高さH)
		9.85	7.0 (巾W) x 11.0 (高さH)

TABLE 1 SMT TYPEは、巾及び高さ寸法に
SMT TYPE INCLUDE DIMENSIONS
半田付タイン部寸法を含みます。
OF SOLDER DIP TINE.

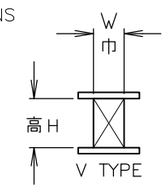

REC HEADER HOUSING
リセ・ヘッダー・ハウジング
PPS
(UL94V-0)

REC CONTACT
リセ・コンタクト
(ニッケル下地錫めっき仕上げ燐青銅
POST TIN PL.
Ni UNDER PL. ALL OVER Phos-Broz)
板厚: 0.3t
THK: 0.3t

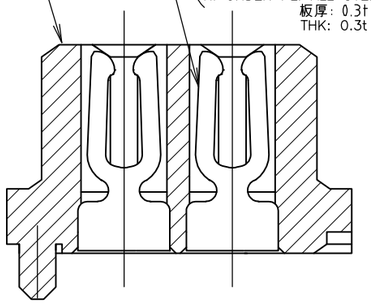

SECT "A"-"A"

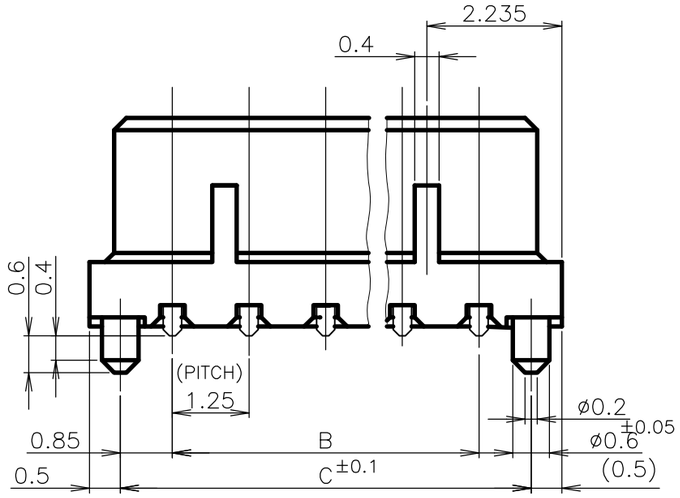

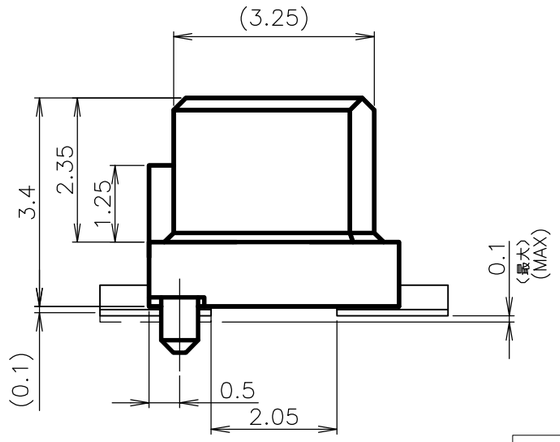

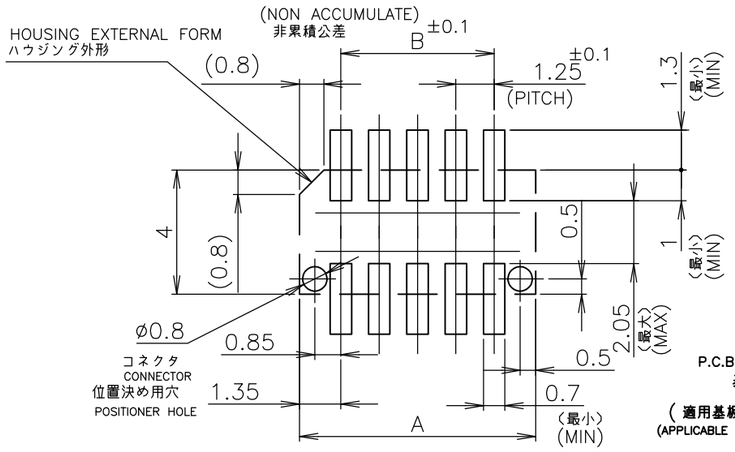

P.C.B MOUNTING LAYUOUT
基板加工寸法

(適用基板厚 :0.6mm 最小)
(APPLICABLE P.C.B THK : 0.6mm MIN)

OBSOLETE		~~19.20~~	~~17.50~~	~~20.20~~	~~30~~	~~6-~~	~~-0~~
		16.70	15.00	17.70	26	5-	-6
		15.45	13.75	16.45	24	5-	-4
OBSOLETE		~~14.20~~	~~12.50~~	~~15.20~~	~~22~~	~~5-~~	~~-2~~
	黒色 BLACK	10.45	8.75	11.45	16	4-176311-6	
	色別 COLOR	C	B	A	極数 Pos.	型番 P/N	

THIS DRAWING IS A CONTROLLED DOCUMENT.

DIMENSIONS: 単位: 粍 mm

TOLERANCES UNLESS OTHERWISE SPECIFIED: 一般公差
~~0 PLC ±~~
~~1 PLC ±~~
~~2 PLC ±~~
~~3 PLC ±~~
~~4 PLC ±~~
~~ANGLES ±~~
1桁以下 : ±0.2
10を超え 30以下 : ±0.25
30を超え 100以下 : ±0.3
角度 : ±3°

MATERIAL 材料: AS SHOWN 図中参照
FINISH 仕上: AS SHOWN 図中参照

DWN S.KANEKI 22JUN89
CHK J.TANIGAWA 22JUN89
APVD N.ONOUE 22JUN89
PRODUCT SPEC 製品規格
APPLICATION SPEC 取付適用規格
WEIGHT 0.000000

TE Connectivity

NAME 名称: 1.25 F-P CONNECTOR B-T-B DOUBLE ROW REC HDR ASSY (V) SMT TYPE WITH BOSS IMPROVED

SIZE	CAGE CODE	DRAWING NO 番号	RESTRICTED TO
A3	00779	C-176311	—

CUSTOMER DRAWING | SCALE 尺度 10:1 | SHEET 1 OF 1 | REV G