THIS DRAWING IS UNPUBLISHED. RELEASED FOR PUBLICATION ,19 .
© COPYRIGHT 19 BY AMP INCORPORATED. ALL RIGHTS RESERVED.

LOC	DIST
J	

REVISIONS 変更

P	LTR	DESCRIPTION	DATE	DWN	APVD
	0	作成 RELEASED (FJ00-0314-00)	22FEB00	S.A	N.S

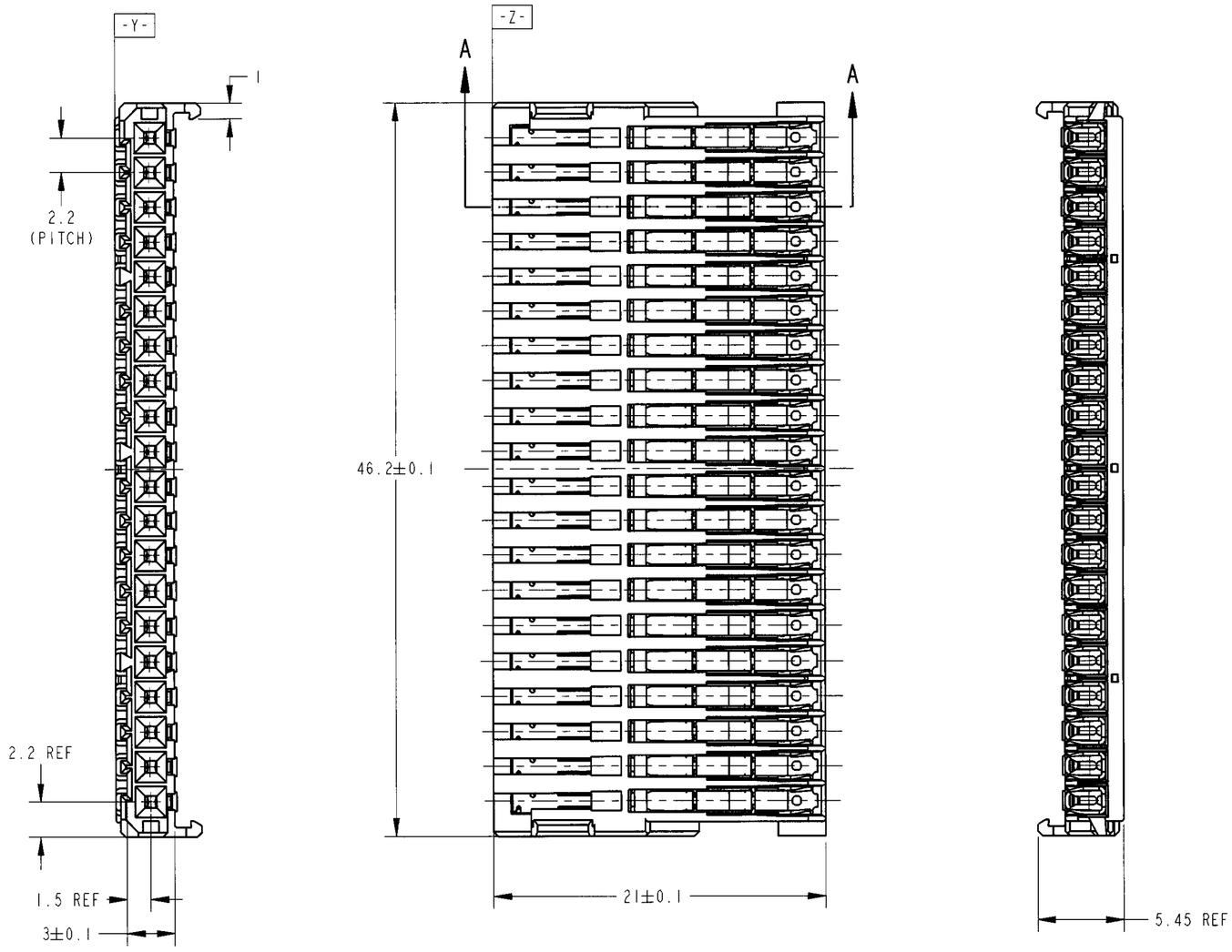

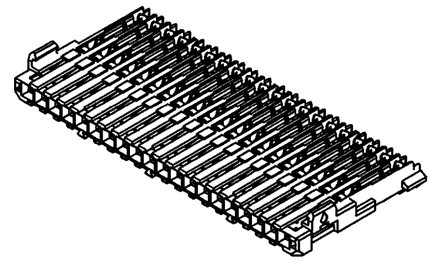

SCALE 2:1

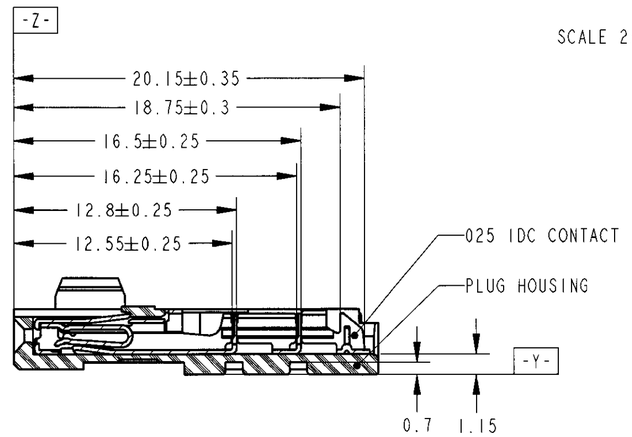

断面 A-A

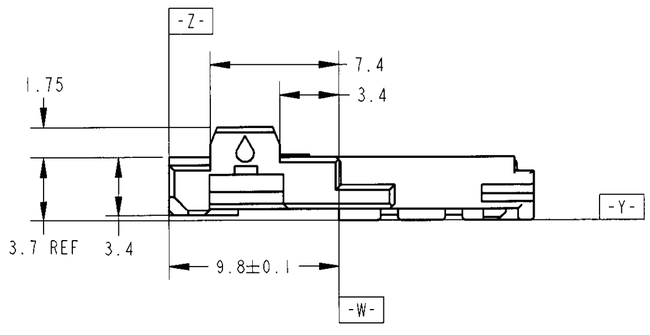

1. 取扱説明書: 411-5912
2. 本品はロックハウジング型番 1318695を装着して使用する。
3. 嵌合相手型番: 1318384

1. INSTRUCTION SHEET: 411-5912
2. PLUG HOUSING MUST BE USED WITH LOCK HOUSING
   P/N: 1318695
3. PART NUMBER OF HOUSINGS TO BE MATED: 1318384

NATURAL	1318691-1
HOUSING COLOR	PART NUMBER

THIS DRAWING IS A CONTROLLED DOCUMENT FOR AMP INCORPORATED. IT IS SUBJECT TO CHANGE AND THE CONTROLLING ENGINEERING ORGANIZATION SHOULD BE CONTACTED FOR THE LATEST REVISION.

DIMENSIONS: 単位: 寸 mm

TOLERANCES UNLESS OTHERWISE SPECIFIED: 一般公差 = ±0.3
0 PLC ±
1 PLC ±
2 PLC ±
3 PLC ±
4 PLC ±
ANGLES ±3°

MATERIAL 材料 HSG: PBT CONT: Cu Alloy

FINISH 仕上 HSG: SEE TABLE CONT: POST TIN

DWN	S.AMEMIYA	22FEB00
CHK	N.SAI	22FEB00
APVD	N.SAI	22FEB00
PRODUCT SPEC 製品規格	108-5660	
APPLICATION SPEC 取付適用規格	114-5276	
WEIGHT	6.1g	

CUSTOMER DRAWING

AMP Tyco Electronics AMP K.K. Kawasaki, Japan

NAME 名称: 20POSITION PLUG ASSEMBLY 025 IDC CONNECTOR

SIZE	CAGE CODE 番号	DRAWING NO
A2	00779	C-1318691

SCALE 尺度 4:1 SHEET 1 OF 1 REV 0