THIS DRAWING IS UNPUBLISHED. RELEASED FOR PUBLICATION -,- .
© COPYRIGHT - BY TYCO ELECTRONICS CORPORATION. ALL RIGHTS RESERVED.

LOC	DIST
J	—

REVISIONS

P	LTR	DESCRIPTION	DATE	DWN	APVD
	A	RELEASED ECR-07-023898	09OCT07	T.Z	S.Y

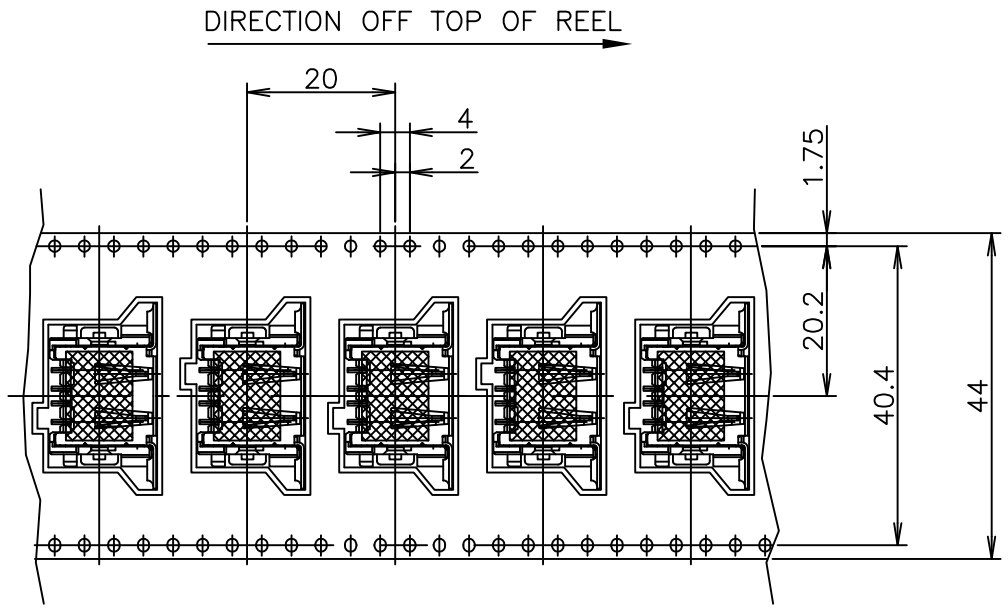

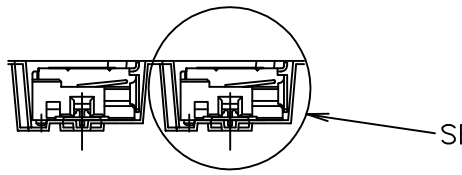

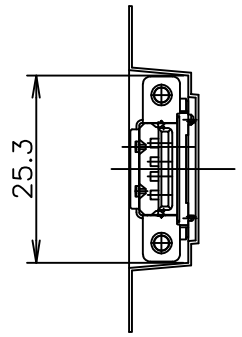

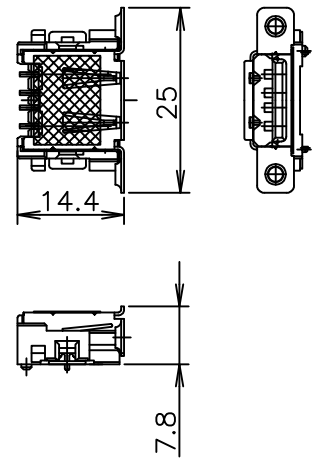

CONNECTOR DETAIL

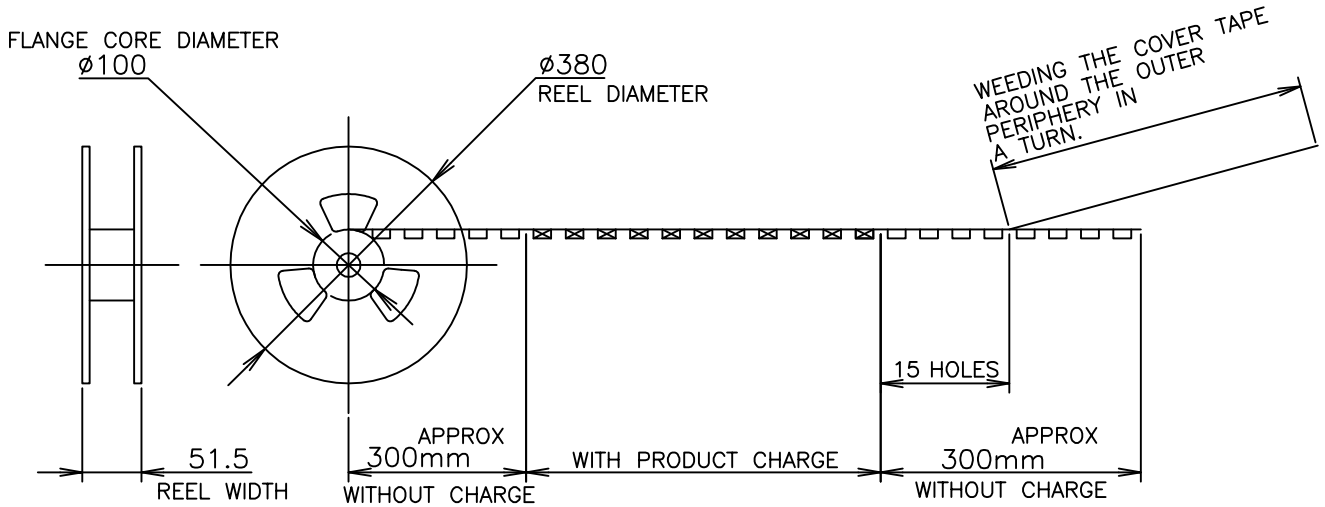

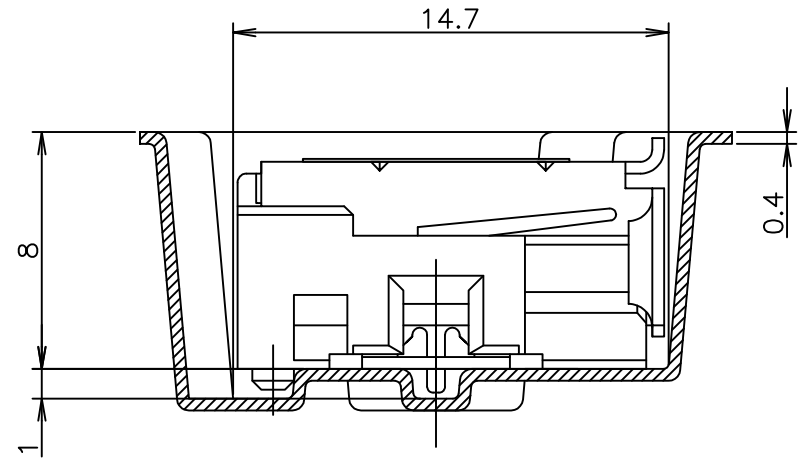

DETAIL A
(SCALE 4:1)

HOUSING COLOR	QTY	POS	EMBOSS P/N	PART NO.
BLACK	350	4	1-912070-8	5353928-2
WHITE	350	4	1-912070-8	5353928-1

THIS DRAWING IS A CONTROLLED DOCUMENT.

DIMENSIONS: mm

TOLERANCES UNLESS OTHERWISE SPECIFIED:

0 PLC	± 0.3
1 PLC	± 0.3
2 PLC	± 0.3
3 PLC	± 0.3
4 PLC	± 0.3
ANGLES	± 5°

MATERIAL —

FINISH —

DWN G. ZHANG 24MAR06
CHK S. YAO 24MAR06
APVD J. QU 24MAR06
PRODUCT SPEC —
APPLICATION SPEC —
WEIGHT —

Tyco Electronics

Tyco Electronics AMP K.K.
Kawasaki, Japan

NAME
EMBOSS ASSY
REVERSE TYPE USB CONN. REC.
WITH COVER TYPE

SIZE	CAGE CODE	DRAWING NO	RESTRICTED TO
A3	00779	C-5353928	—

CUSTOMER DRAWING

SCALE	SHEET	REV
1:1	1 OF 2	A

THIS DRAWING IS UNPUBLISHED. RELEASED FOR PUBLICATION -,- .
© COPYRIGHT - BY TYCO ELECTRONICS CORPORATION. ALL RIGHTS RESERVED.

LOC	DIST
J	—

REVISIONS

P	LTR	DESCRIPTION	DATE	DWN	APVD
	—	SEE SHEET 1	-	—	—

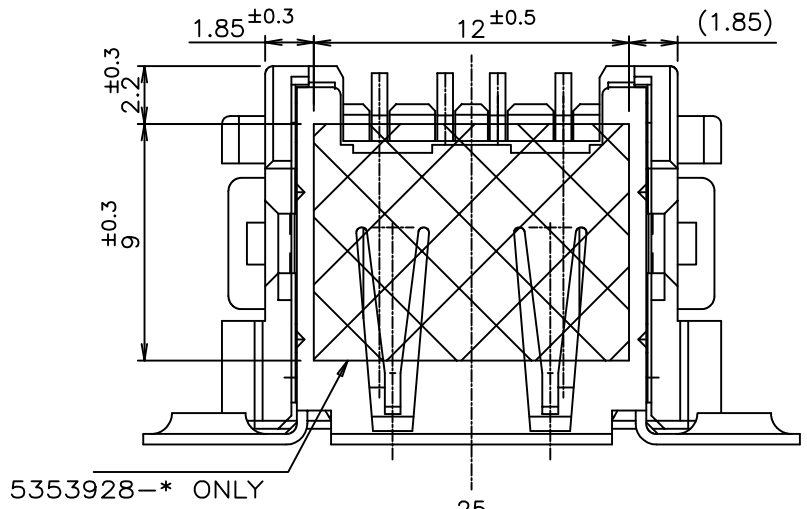

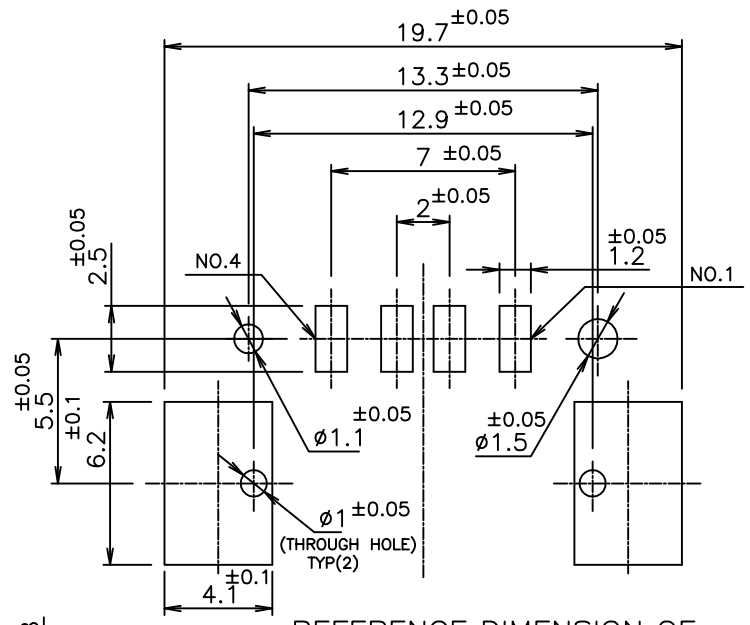

REFERENCE DIMENSION OF P.C.BOARD(MOUNTING SIDE)

1 MATERIAL & FINISH
CONTACT: COPPER ALLOY
Au PL. ON Pd-Ni PL. AT CONTACT AREA OVER Ni PL.
TIN PL. AT TINE AREA OVER Ni PL.
HOUSING: THERMO-PLASTICS, UL-94V-0
SHELL : COPPER ALLOY, TIN PL.

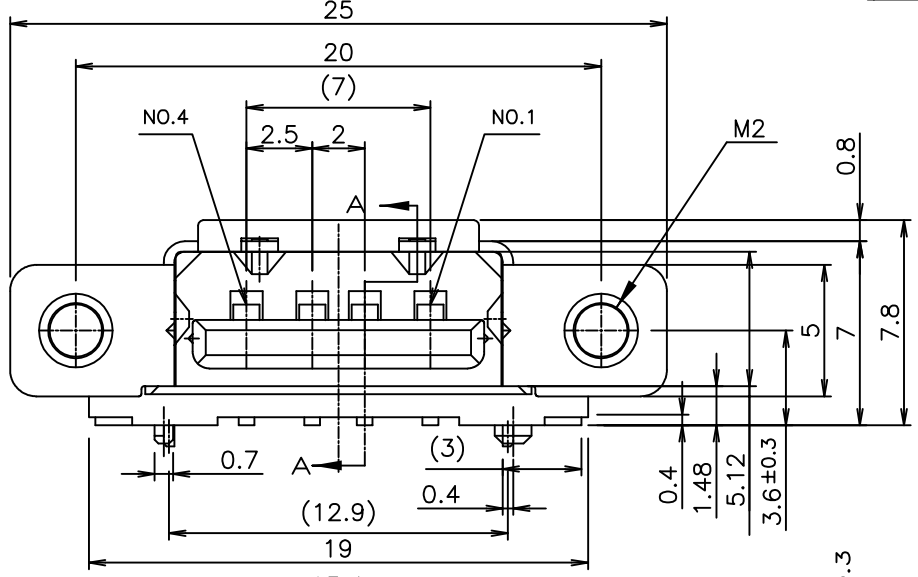

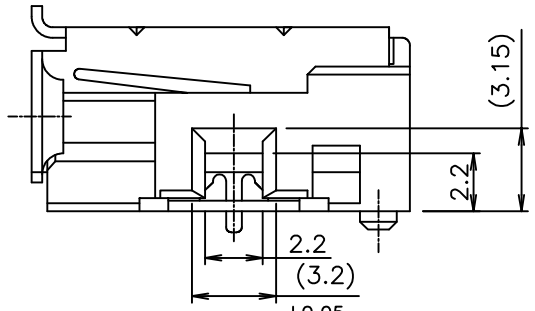

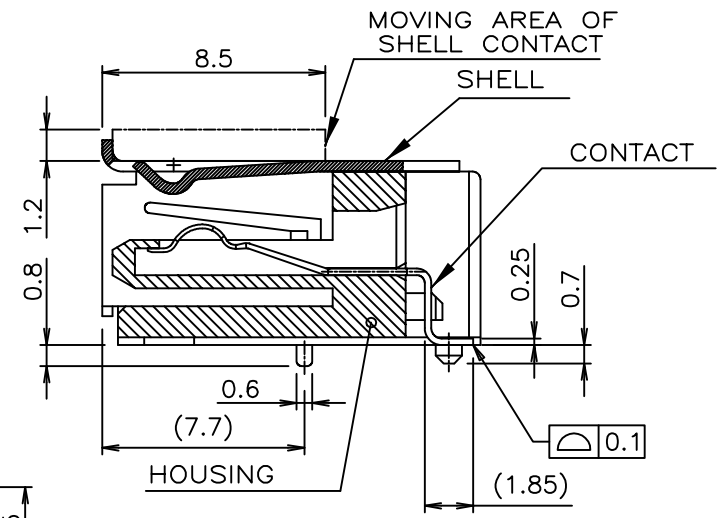

SECTION A-A

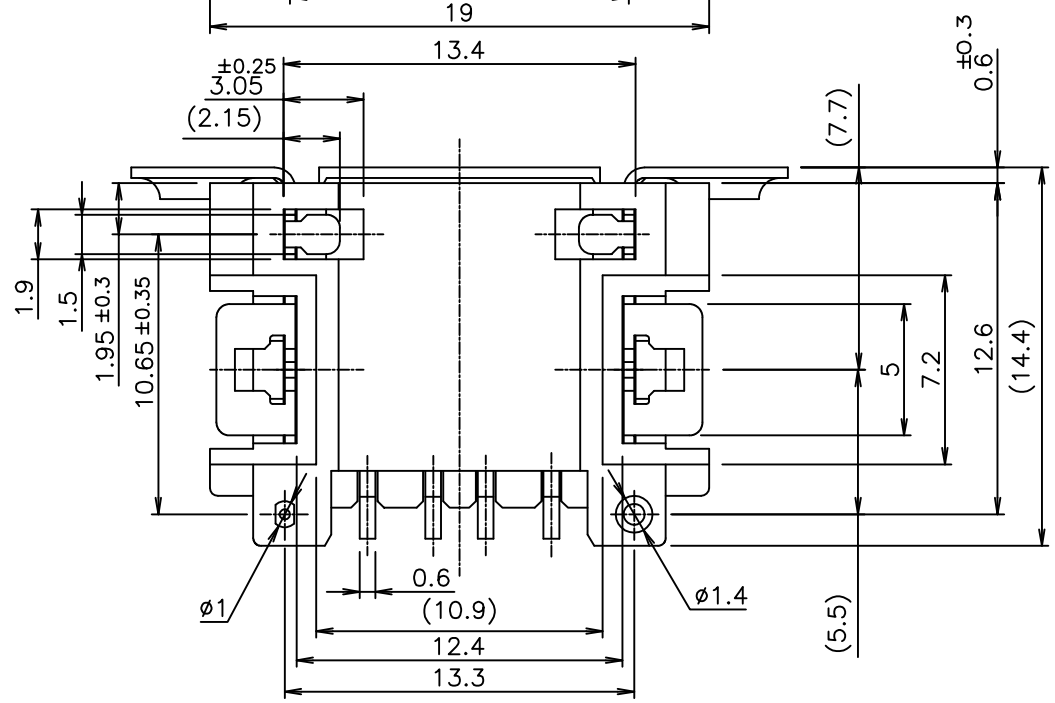

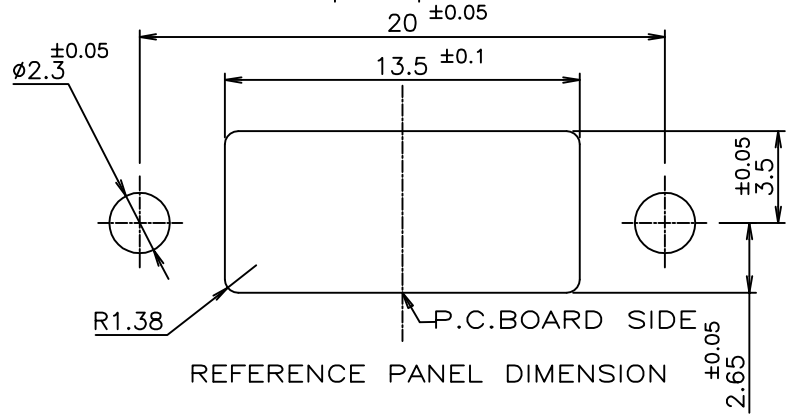

REFERENCE PANEL DIMENSION

HOUSING COLOR	REMARKS	PART NO.
BLACK	WITH TAPE	5353928-2
WHITE	WITH TAPE	5353928-1

THIS DRAWING IS A CONTROLLED DOCUMENT.

DIMENSIONS: mm

TOLERANCES UNLESS OTHERWISE SPECIFIED:

0 PLC	± 0.3
1 PLC	± 0.3
2 PLC	± 0.3
3 PLC	± 0.3
4 PLC	± 0.3
ANGLES	± 5°

MATERIAL —

FINISH —

DWN	G. ZHANG	24MAR06
CHK	S. YAO	24MAR06
APVD	J. QU	24MAR06
PROJECT SPEC	—	
APPLICATION SPEC	—	
WEIGHT	—	

Tyco Electronics

Tyco Electronics AMP K.K.
Kawasaki, Japan

NAME
EMBOSS ASSY
REVERSE TYPE USB CONN. REC.
WITH COVER TYPE

SIZE	CAGE CODE	DRAWING NO	RESTRICTED TO
A3	00779	C-5353928	—

CUSTOMER DRAWING

SCALE	SHEET	REV
1:1	2 OF 2	A