THIS DRAWING IS UNPUBLISHED. RELEASED FOR PUBLICATION 20
© COPYRIGHT 20 BY - ALL RIGHTS RESERVED.

REVISIONS					
P	LTR	DESCRIPTION	DATE	DWN	APVD
	A	MODIFY DISTORTION ON DIM 1, 32 AND 33	29NOV2017	FB	DB

CONDITIONNEMENT:

1000 pièces mise en vrac dans un carton type standard 580x380x175

PACKAGING

1000 pieces in bulk delivered in one standard box (dim: 580x380x175)

NOTICE DE CONTROLE:

- TOUTE COTE (MSP) OU FONCTIONNELLE ⊽ FIGURANT SUR CE PLAN ET NON RESPECTEE SUR UN LOT, FERA L'OBJET D'UN REFUS PAR RAPPORT AU CONTRACT QUALITE COMPOSANT.
- AU PIED A COULISSE OU AU PROJECTEUR DE PROFIL VERIFIER LES COTES D'ENCOMBREMENTS ET FONCTIONNELLES PORTEES AU PLAN.

DIMENSIONAL-CHECK PROCEDURE

- *Any SPC or functional ⊽ dimension in a batch which is off-spec will result in the refusal of the batch, in accordance with the component quality contract.*
- *Using a calliper rule or profile projector, checks are made of all dimensions shown on the drawing above.*

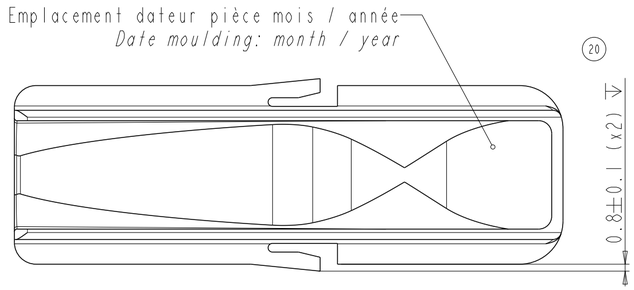

COUPE A-A
SECTION A-A

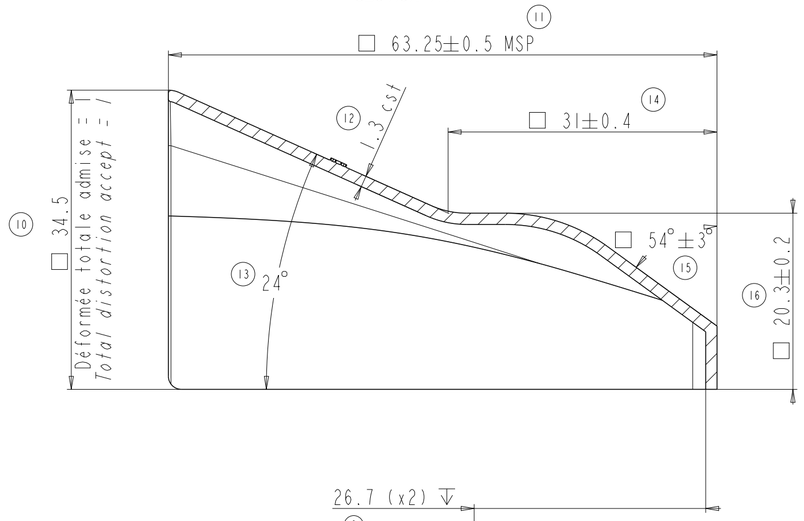

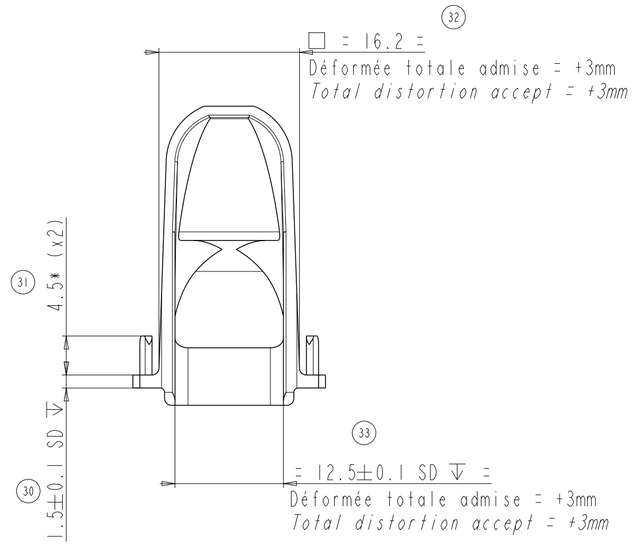

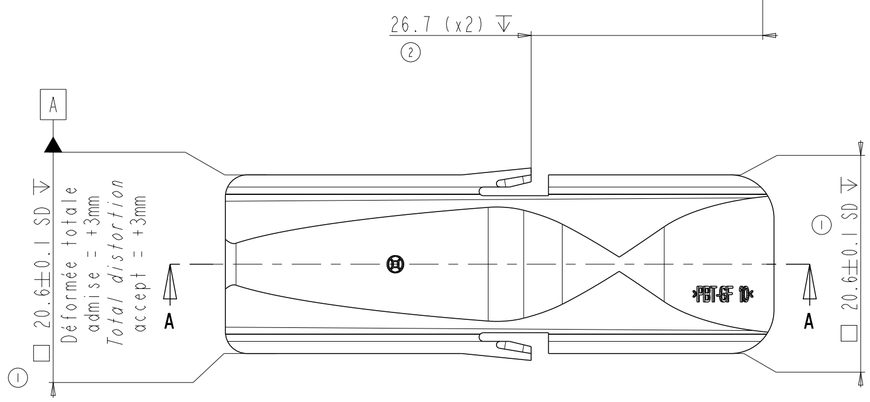

ECHELLE 1
SCALE 1

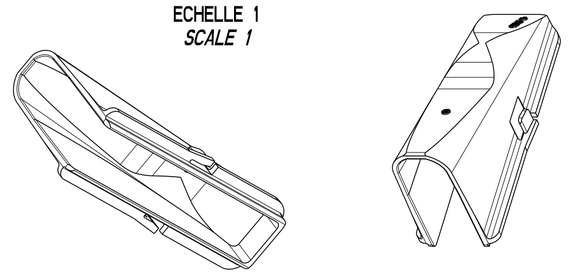

NOTA:

- = X = : Symétrie générale de 0.2 par rapport à A
- *= X = : general symmetry to 0.2 by A*
- ⊽ = Cote fonctionnelle
- *⊽ = Functional dimension*
- □ = cote d'encombrement
- *▱ = Overall dimension*
- MSP = Cote suivie en MSP
- *MSP = SPC dimension*

1544552-1
PART NUMBER

THIS DRAWING IS A CONTROLLED DOCUMENT.	DWN F.BACHAR 29NOV2017	TE Connectivity	
DIMENSIONS: mm	CHK D. BANCE 29NOV2017	NAME CAPOT POUR CONNECTEUR 5 VOIES COVER FOR 5 WAY 6.35 NGI CONNECTOR	
TOLERANCES UNLESS OTHERWISE SPECIFIED: 0 PLC ±0.2, 1 PLC ±0.2, 2 PLC ±0.2, 3 PLC ±0.2, 4 PLC ±0.2, ANGLES ± 2°	APVD X. ROUILLARD 29NOV2017	SIZE A2	CAGE CODE 00779
	PRODUCT SPEC 108-15368	DRAWING NO C-1544552	RESTRICTED TO -
MATERIAL PBT 10% FV NOIR / PBT GF10 BLACK	APPLICATION SPEC -	SCALE 2:1	SHEET 1 OF 1
FINISH - / -	WEIGHT 6.90 g	REV A	
	CUSTOMER DRAWING		

1471-9 (3/13)