DRAWING MADE IN THIRD ANGLE PROJECTION

THIS DRAWING IS UNPUBLISHED. RELEASED FOR PUBLICATION ,19 .
© COPYRIGHT 19 BY AMP INCORPORATED. ALL INTERNATIONAL RIGHTS RESERVED.

LOC	DIST
DF	XO

P	F	ZONE	LTR	REVISIONS DESCRIPTION	DATE	APPD
			G	REV PER 0G3D-0579-00 CT	1-01	SG

PART NO	CABLE	DIM A	DIM B	DIM C	DIM D	DIM E	REMARKS
222190-1	M17-176-00002; NORTHROP 05A078-1	.143 [3.63]	.032 [0.81]	.054 [1.37]	.112 [2.84]	.047 [1.19]	12
222190-2	M17-176-00002; NORTHROP 05A078-1	.143 [3.63]	.032 [0.81]	.054 [1.37]	.112 [2.84]	.047 [1.19]	12
222190-3	TENSOLITE 24463/9P025X-2(LD) OR TENSOLITE 24463/9B017X-2(LD) (OBSOLETE)	.157 [3.99]	.050 [1.27]	.063 [1.60]	.140 [3.56]	.052 [1.32]	-
222190-4	M17-176-00002; NORTHROP 05A078-1	.143 [3.63]	.032 [0.81]	.054 [1.37]	.112 [2.84]	.047 [1.19]	-

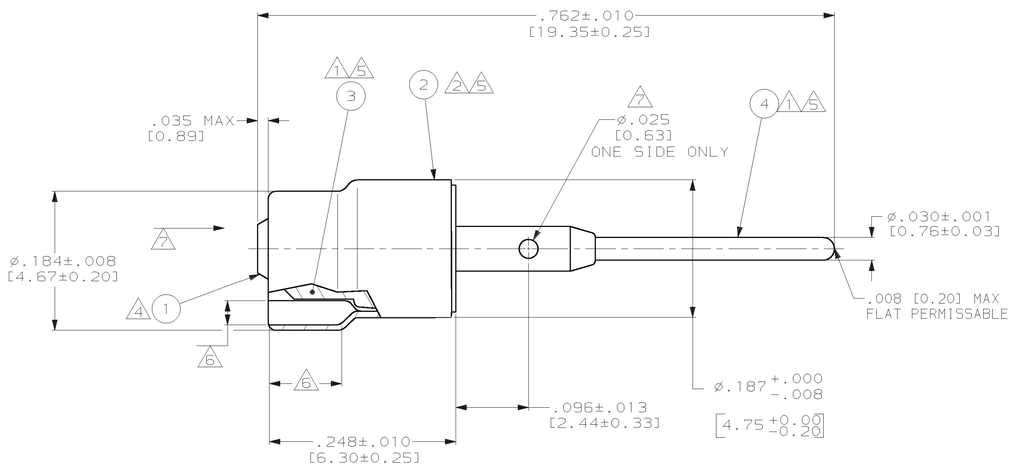

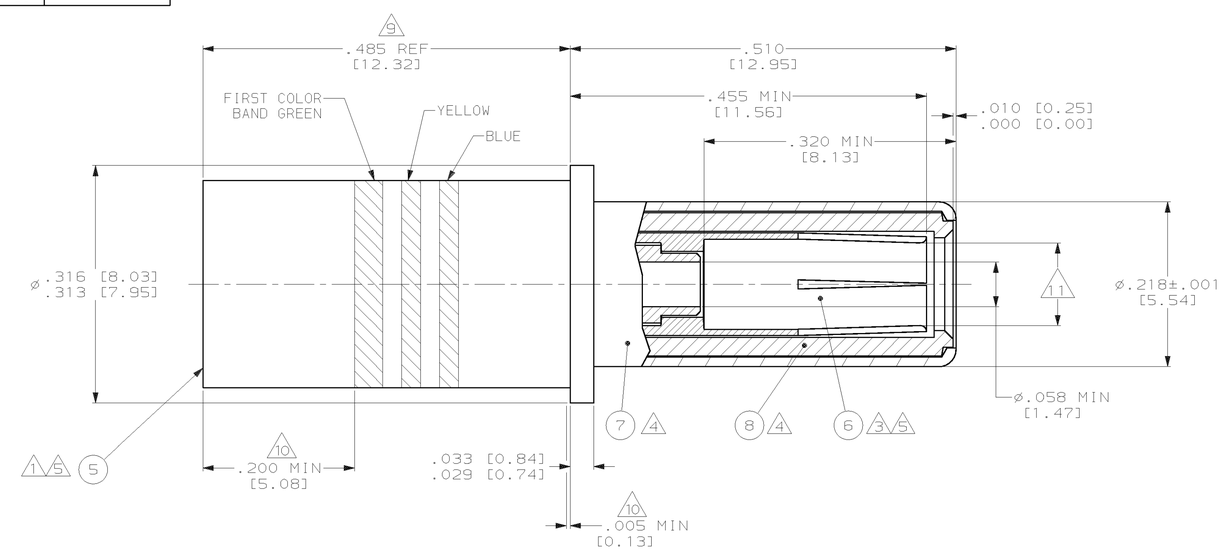

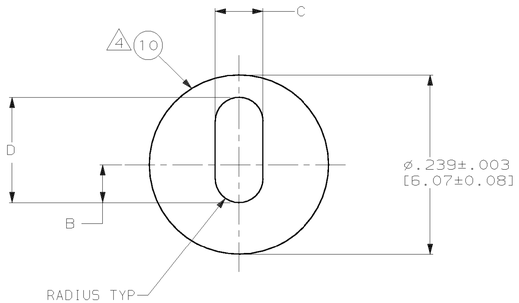

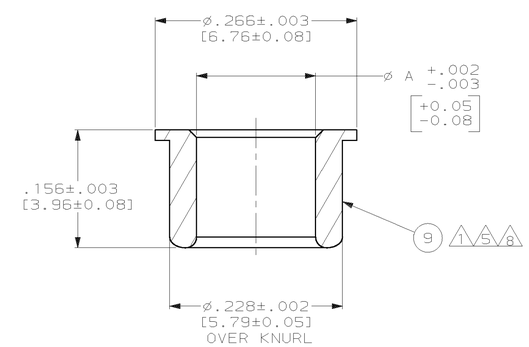

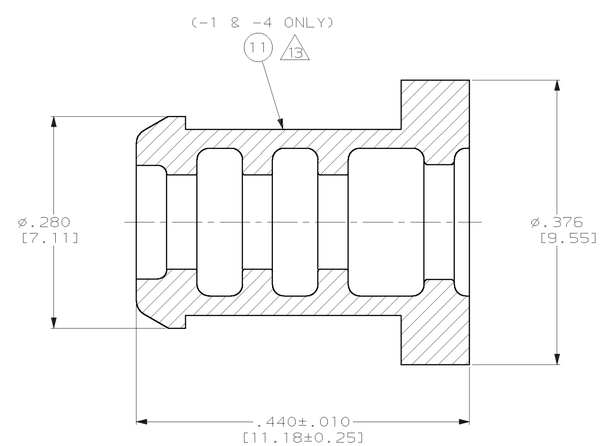

1. MAT'L: BRASS PER ASTM-B-16
2. MAT'L: COPPER PER ASTM-B-152.
3. MAT'L: BERYLLIUM COPPER PER ASTM-B-196.
4. MAT'L: PTFE PER ASTM-D-1710.
5. FINISH: GOLD PLATE PER MIL-G-45204, TYPE 1, GRADE C, CLASS 1 OVER NICKEL .000050 [0.0013] THK PER QQ-N-290, CLASS 2.
6. A .0285 [0.72] GAGE PIN MUST ENTER FOR A LENGTH OF .085 [2.16] MIN.
7. .028 [0.71] GO - .030 [0.76] NO GO GAGE WILL ENTER TO A DEPTH OF SIGHT HOLE.
8. 160 DP. FULL DIAMOND KNURL OVER THIS LENGTH.
9. .533 [13.54] MAX AFTER TERMINATION TO CABLE
10. BANDS COLOR CODED PER MIL-C-39029 COLOR CODE BANDS CAN BE LOCATED ANYWHERE BETWEEN THE .200 [5.08] MIN AND .005 [0.13] MIN DIMENSIONS.
11. MATES WITH A .113±.001 [2.87±0.03] PIN.
12. BAG MARKED WITH CUSTOMER P/N (05A075-1) FOR -1 & -2 ONLY.
13. MAT'L: FLOUROSILICONE MLDG. CMPD. PER ZZ-R-765.

DESCRIPTION	ITEM NO
SEALING PLUG	11
BUSHING	10
FERRULE	9
DIELECTRIC,OUTER,FRONT	8
DIELECTRIC	7
CONTACT,INTERMEDIATE,SIZE 8	6
SHELL,OUTER,PIN	5
CONTACT,CENTER,PIN	4
SHELL,CRIMP END	3
FERRULE	2
DIELECTRIC	1

THIS DRAWING IS A CONTROLLED DOCUMENT FOR AMP INCORPORATED. IT IS SUBJECT TO CHANGE AND THE CONTROLLING ENGINEERING ORGANIZATION SHOULD BE CONTACTED FOR THE LATEST REVISION.

DO NOT SCALE PRINT.
UNLESS SPECIFIED
DIMENSIONS IN INCHES [mm]
TOLERANCES ON :
2 PLC DEC ± -
3 PLC DEC ± .005 [0.13]
ANGLES ± -

MATERIAL: SEE CALLOUTS

FINISH: SEE CALLOUTS

DR 7-26-93 C.C.THOMAS
CHK 8-11-93 C. SHELLY
APPD 8-11-93 C. SHELLY
APPD 8-11-93 C.C.THOMAS
PRODUCT SPEC 108-12092
APPLICATION SPEC 114-12010
WEIGHT -

AMP Incorporated
Harrisburg, PA 17105-3608

NAME: PIN,SIZE 8,KIT,ARINC-TWINAX

SIZE D | CAGE CODE 00779 | DRAWING NO C-222190
SCALE 10:1 | SHEET 1 OF 1

CUSTOMER DRAWING

AMP 1756-3 REV 3-92

10-JAN-01 10:02:32 amp16412 /home/amp16412/edsmod