THIS DRAWING IS UNPUBLISHED. RELEASED FOR PUBLICATION ,19 .
DIFFUSION RESTREINTE AMP DIFFUSION PUBLIQUE
© COPYRIGHT 19 BY AMP INCORPORATED. ALL RIGHTS RESERVED. TOUS DROITS RESERVES.

LOC	DIST
F	7

REVISIONS

P	LTR REV	DESCRIPTION MODIFICATIONS	DATE	DWN DESS.	APVD APP.
	–	–	–	–	–

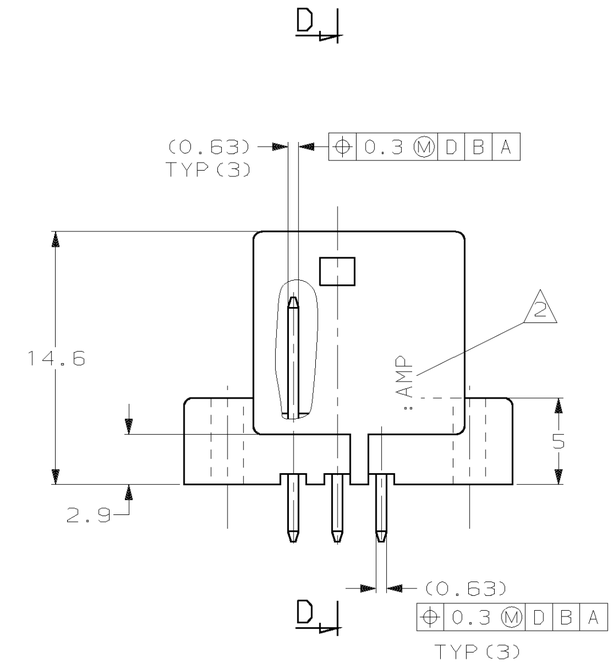

SECTION DD

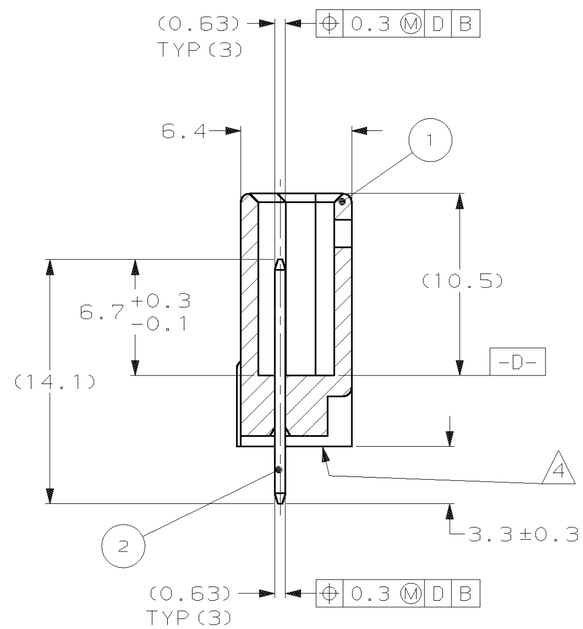

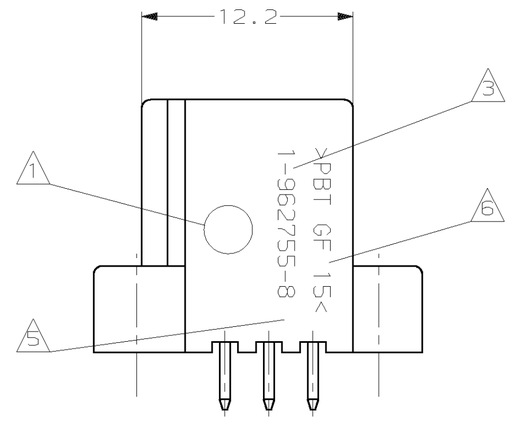

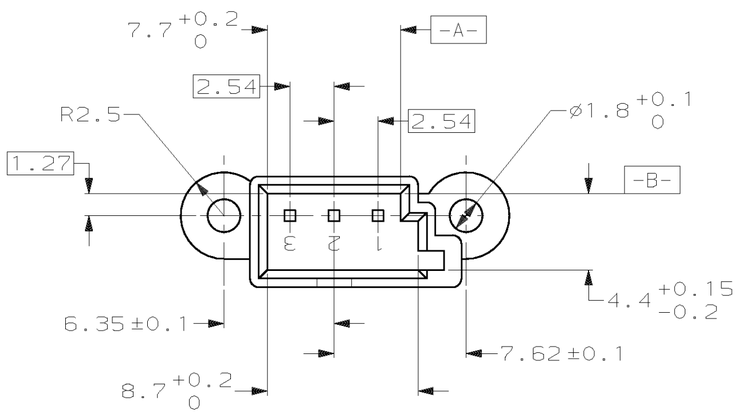

NOTES:

1. DATE CODE
2. LOGO D'AMP
3. REFERENCE DU BOITIER
4. N° D'EMPREINTE DU MOULE
5. REVISION DU MOULE
6. MATIERE

POST ETAME	3	BRONZE	CONTACT MQS	2	185730-1
NOIR	1	PBT CV 15%	BOITIER 3 VOIES	1	
FINITION	QTE	MATIERE	DESCRIPTION	POS	REFERENCE

THIS DRAWING IS A CONTROLLED DOCUMENT FOR AMP INCORPORATED. IT IS SUBJECT TO CHANGE AND THE CONTROLLING ENGINEERING ORGANIZATION SHOULD BE CONTACTED FOR THE LATEST REVISION. CE PLAN EST UN DOCUMENT CONTROLE PAR AMP INCORPORATED. IL EST SUSCEPTIBLE D'ETRE REVISE. CONTACTER LE SERVICE TECHNIQUE D'AMP DE FRANCE POUR OBTENIR LA DERNIERE REVISION.

DIMENSIONS: mm

TOLERANCES UNLESS OTHERWISE SPECIFIED: TOLERANCES NON SPECIFIEES (SUIV NB DE DECIMALES):
~~0 PLC/DEC~~ ±
~~1 PLC/DEC~~ ±0.3
~~2 PLC/DEC~~ ±
~~3 PLC/DEC~~ ±
~~4 PLC/DEC~~ ±
ANGLES ±5°

MATERIAL MATIERE –
FINISH FINITION –

DWN/DESSINE 04-SEP-96 Jacques LAQUERBE
CHK/VERIFIE 18-SEP-96 J.LAQUERBE
APVD/APPROUVE 18-SEP-96 JJ.REVIL
PRODUCT SPEC SPEC. PRODUIT 108-15156
APPLICATION SPEC SPEC. APPLICATION 411-15579
WEIGHT MASSE APPROX. 1 g

AMP
AMP DE FRANCE
95301 PONTOISE

NAME TITRE: EMBASE DROITE 3 VOIES MQS

SIZE FORMAT: A2
CAGE CODE: 00779
DRAWING NO TITRE: C-185730

CUSTOMER DRAWING/PLAN CLIENT UNIQUEMENT POUR REFERENCE
SCALE ECHELLE 4:1
SHEET FEUILLE 1 OF DE 1
REV 0

AMP1471-9 REV 10/93

05-SEP-96 16:29:05 jL3237 /home/dept1302/jL3237/edmmod