REV	DESCRIPTION	DET	DATE
D	128601 ASSY WAS 126749 COLLET & 126751 DRAWBAR, ADDED NOTE 7		03/04/08
E	128491 WAS 128601 ADDED 128488	JJC	07/31/12
F	ADDED 508511, 130322-1 WAS 126746, 130326-1 WAS 126745; ADDED VIEW	NDG	06/04/13

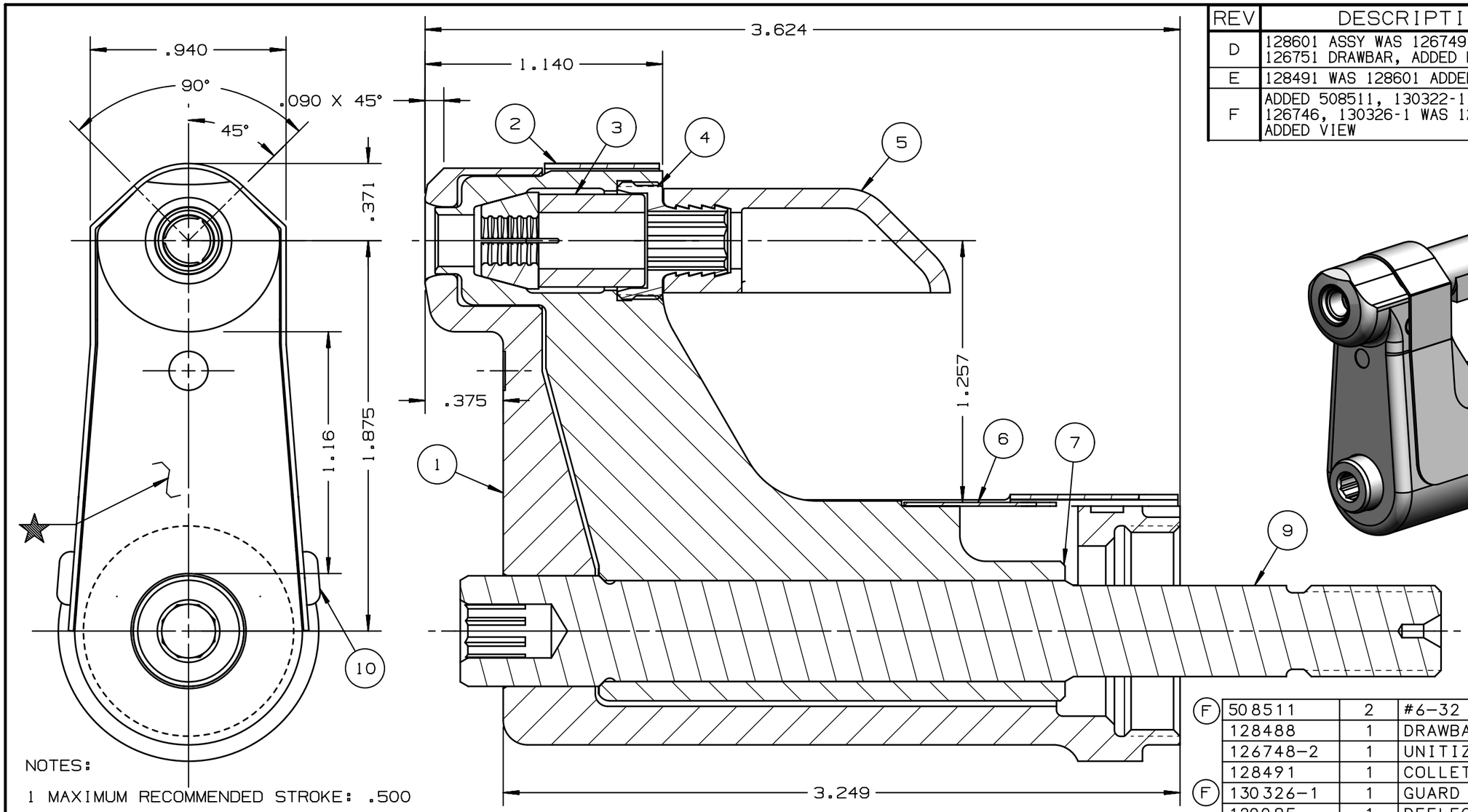

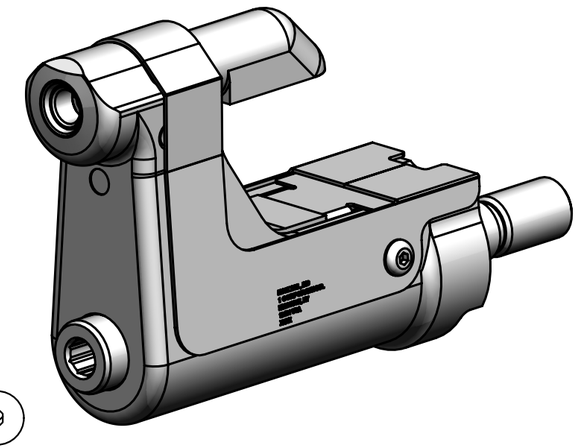

	PART NO.	QTY	DESCRIPTION	ITEM
F	508511	2	#6-32 B.H.C.S.	10
	128488	1	DRAWBAR	9
	126748-2	1	UNITIZED DEFLECTOR	8
	128491	1	COLLET	7
F	130326-1	1	GUARD	6
	120095	1	DEFLECTOR	5
	122727	1	BARBED RETAINER	4
	122725	1	UNITIZED CHUCK JAW	3
F	130322-1	1	TOP GUARD	2
	126750	1	ANVIL	1

NOTES:

1 MAXIMUM RECOMMENDED STROKE: .500

2 FOR USE WITH THE 225/245 TOOL, USE ATTACHMENT P/N 119400-1 AND STROKE LIMITER 118362

3 FOR USE WITH 2500 TOOL, USE ATTACHMENT P/N 119400-1 AND STROKE LIMITER KIT 119888

4 FOR OTHER TOOLS AND/OR OTHER TOOL AND STROKE COMBINATIONS, CONSULT ENGINEERING DEPARTMENT

5 SHIP WITH STOP 126747

6 SHIP WITH DEFLECTOR 126748-2

7 SHIP WITH (2) .030 SHIMS 128290 REFERENCE PB563 FOR PROPER USE

8 PRIMARILY USED WITH 206-375

IDENTIFICATION PER SPEC 42-311: ★ ETCH

ITAR:

ECCN: EAR99

SCH B#: 8467.99.0190

HTS: 8467.99.0190

HUCK INTERNATIONAL, INC., I.S.D.
1 CORPORATE DR, P.O. BOX 2270
KINGSTON, NEW YORK 12401

NOSE ASSEMBLY
-08 LGP STRADDLE LONG

DET: MVM CK: DATE: 02/19/02 SCALE: 2:1

B **99-3735-1**

FORM KE104 Rev D By accepting this proprietary Huck drawing, recipient agrees not to reproduce or disclose any part thereof to any other without the written permission of Huck International, Inc.