THIS DRAWING IS UNPUBLISHED. RELEASED FOR PUBLICATION -,- .
© COPYRIGHT - By - ALL RIGHTS RESERVED.

LOC	DIST
AF	50

REVISIONS

P	LTR	DESCRIPTION	DATE	DWN	APVD
	D	REVISED PER ECR-12-013518	23NOV2012	KH	PD

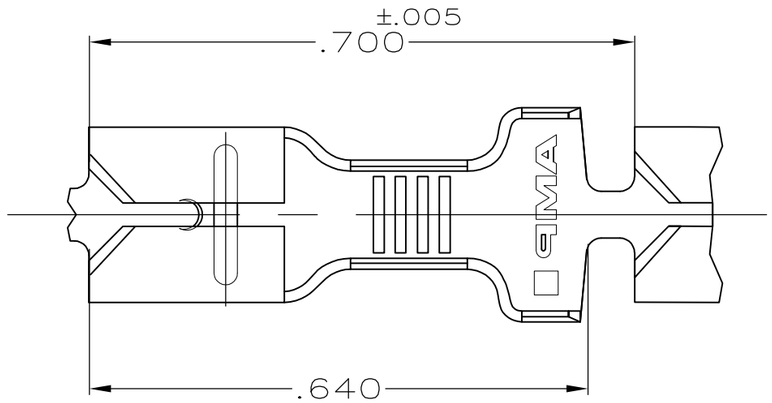

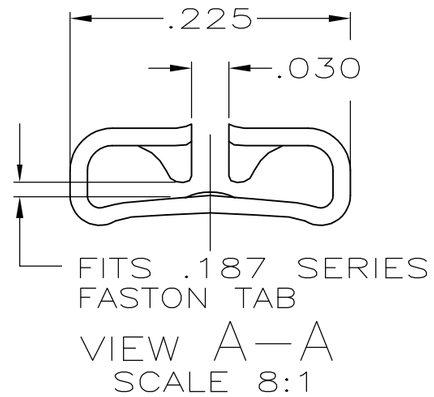

1 CONTINUOUS STRIP ON REELS.

2 FINISH:
63596-1 PLAIN
63596-2 PRE-TIN

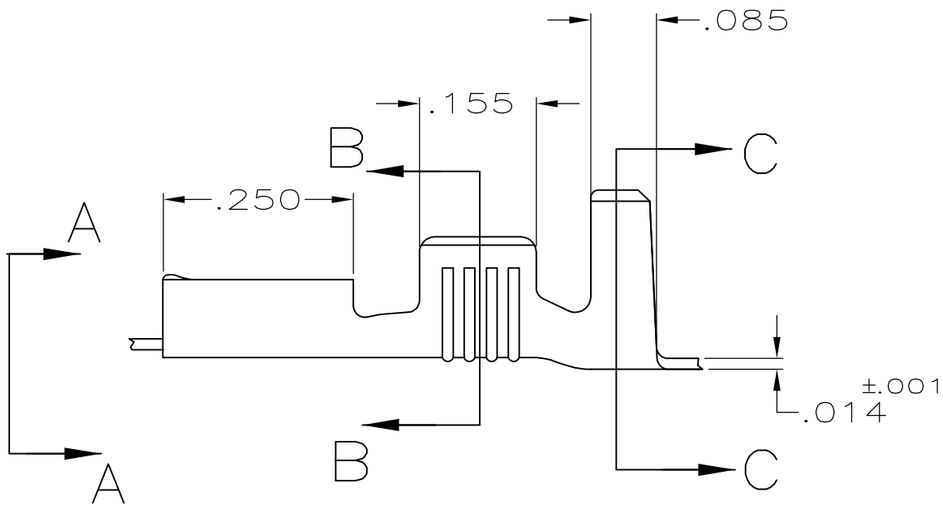

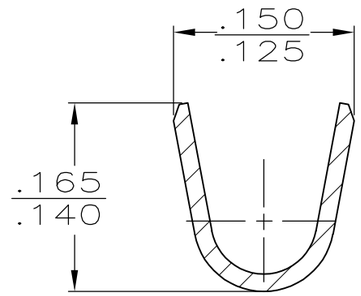

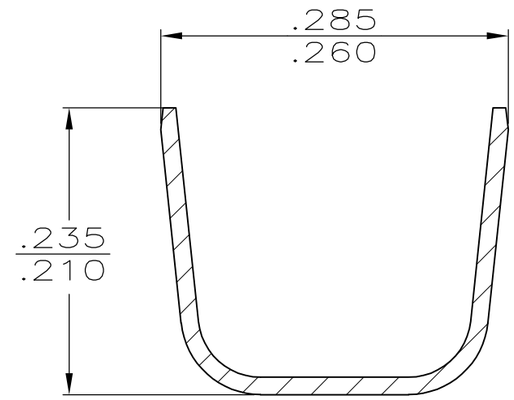

.180 — .230 OR (2) .110 MAX	18-14 OR (2) #16'S	.032	63596-2
			63596-1
INSUL RANGE	WIRE SIZE	MATING TAB THK ±.001	PART NO

THIS DRAWING IS A CONTROLLED DOCUMENT.

DIMENSIONS: INCHES

TOLERANCES UNLESS OTHERWISE SPECIFIED:

0 PLC	± -
1 PLC	± -
2 PLC	± -
3 PLC	± .010
4 PLC	± -
ANGLES	± -

MATERIAL: BRASS

FINISH: 2

DWN	JR RUTH	10/4/90
CHK	MS FEHER	10/4/90
APVD	C MEYERS	10/4/90
PRODUCT SPEC	—	
APPLICATION SPEC	—	
WEIGHT	—	

CUSTOMER DRAWING

TE Connectivity

NAME: RECEPTACLE, FASTON,™ .187 SERIES

SIZE	CAGE CODE	DRAWING NO	RESTRICTED TO
A3	00779	C-63596	—

SCALE	SHEET	REV
5:1	1 OF 1	D