THIS DRAWING IS UNPUBLISHED. RELEASED FOR PUBLICATION ,19 .
© COPYRIGHT 19 BY AMP INCORPORATED. ALL RIGHTS RESERVED.

LOC	DIST
AJ	16

REVISIONS

P	LTR	DESCRIPTION	DATE	DWN	APVD
	E1	REVISED PER ECO-06-018711	30AUG2006	MC	JH

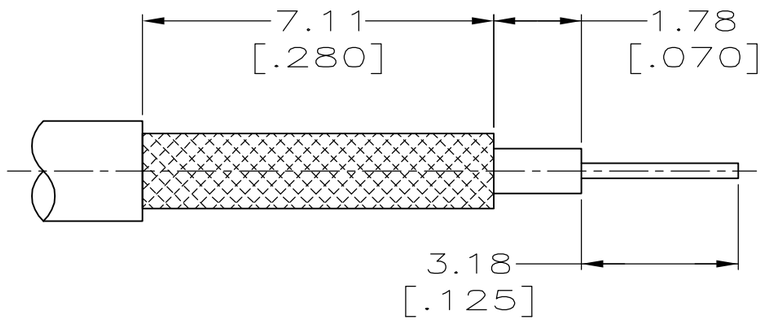

RECOMMENDED STRIP LENGTHS

1. PARTS PACKAGED UNASSEMBLED.
2. CONTACT CRIMP: CRIMP TOOL MIL-C-22520/5-01 WITH DANIELS POSITIONER K727; SET ON POSITION #2.
3. BRAID CRIMP: AMP HAND TOOL PART NUMBER 220190-1 WITH DIE SET PART NUMBER 58046-1, OR HAND TOOL MIL-C-22520/5-01 WITH DANIELS DIE SET NUMBER Y144.
4. BRAID CRIMP: AMP HAND TOOL PART NUMBER 220190-1 WITH DIE SET PART NUMBER 59969-2, OR HAND TOOL MIL-C-25520/5-01 WITH DANIELS DIE SET NUMBER Y196.

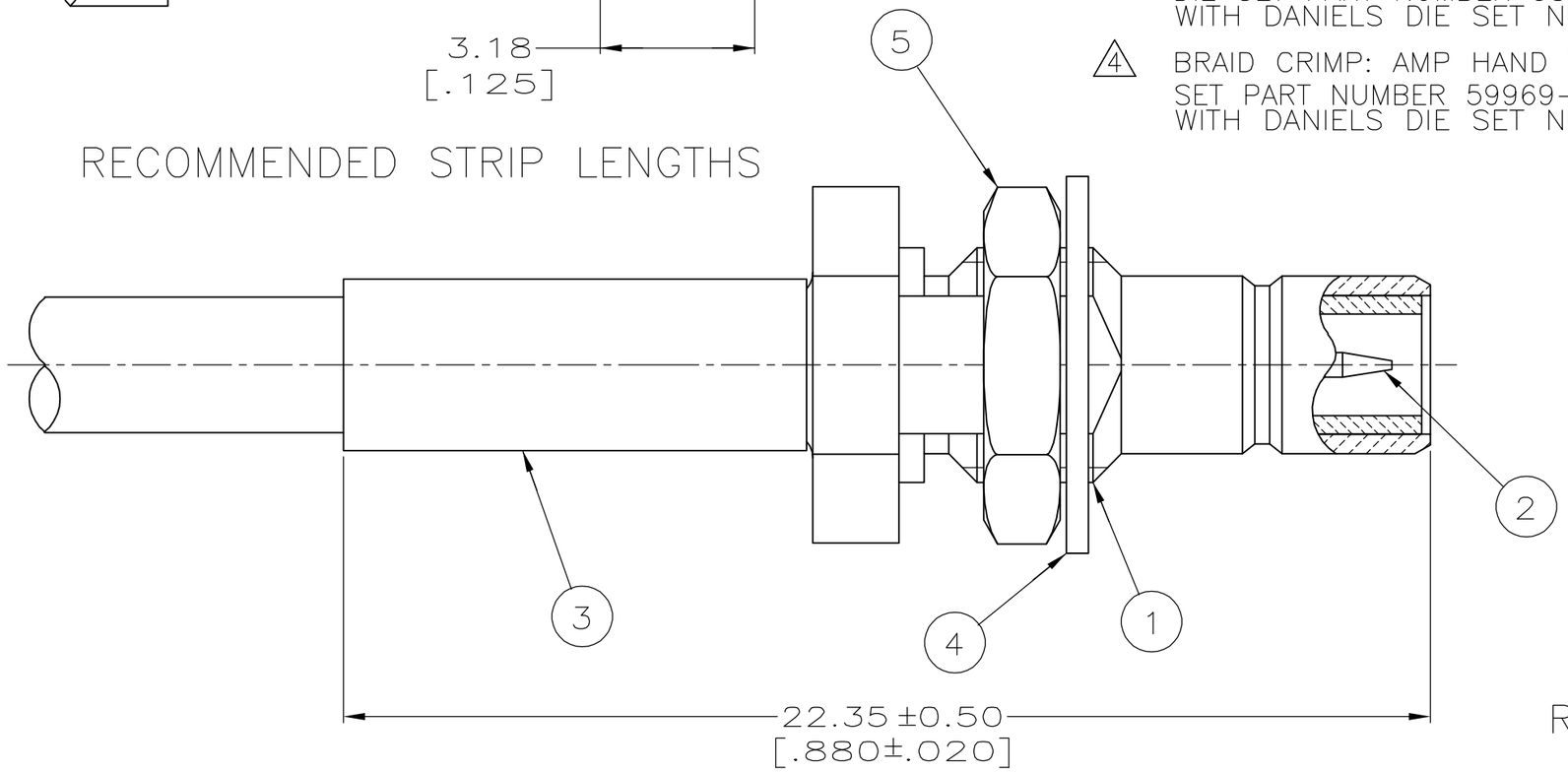

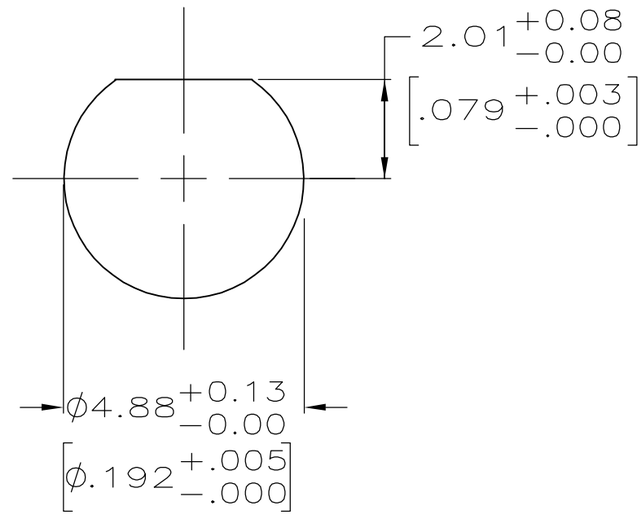

RECOMMENDED PANEL CUT-OUT

OBSOLETE	RG-178/U	2 3	414969-2	415001-2	1-413889-3	228570-2	415007-1	415006-3
OBSOLETE	RD-316	2 4	414969-2	415001-2	1-413889-4	228225-2	415007-1	415006-2
	RG-188/U & -316/U	2 3	414969-2	415001-2	1-413889-3	228225-2	415007-1	415006-1
	CABLE	CRIMP TOOLING	5 JAM NUT QTY=1	4 LOCKWASHER QTY=1	3 FERRULE QTY=1	2 CONTACT QTY=1	1 JACK ASSY QTY=1	PART NUMBER

THIS DRAWING IS A CONTROLLED DOCUMENT.

DIMENSIONS: mm[INCHES]

TOLERANCES UNLESS OTHERWISE SPECIFIED:
0 PLC ±–
1 PLC ±–
2 PLC ±0.25 [.010]
3 PLC ±–
4 PLC ±–
ANGLES ±–

MATERIAL –
FINISH –

DWN B. MOYER 16SEP96
CHK J. CABARLO 17SEP96
APVD J. CABARLO 17SEP96
PRODUCT SPEC –
APPLICATION SPEC –
WEIGHT –

CUSTOMER DRAWING

AMP Incorporated
Harrisburg, PA 17105-3608

NAME
BULKHEAD JACK, SMB

SIZE	CAGE CODE	DRAWING NO
A3	00779	C-415006

SCALE	SHEET	REV
8:1	1 OF 1	E1