MATERIAL NO.	ENG. NO.	STUD SIZE	"S"±.003	MATERIAL	PLATING
190840004	SRZ-4129-06	6	.146/3.71	BRASS	ELECTRO-TIN
190840005	SRZ-4129-08	8	.173/4.39		
190840006	SRZ-4129-10	10	.198/5.03		
190840007	SRZ-S-4129-06	6	.146/3.71	STEEL	
190840008	SRZ-S-4129-08	8	.173/4.39		
190840009	SRZ-S-4129-10	10	.198/5.03		

C

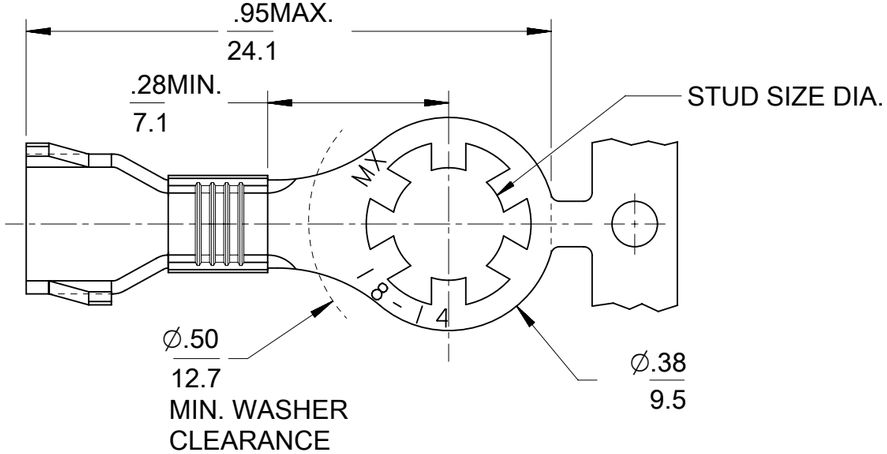

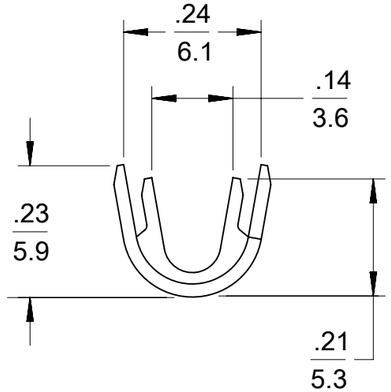

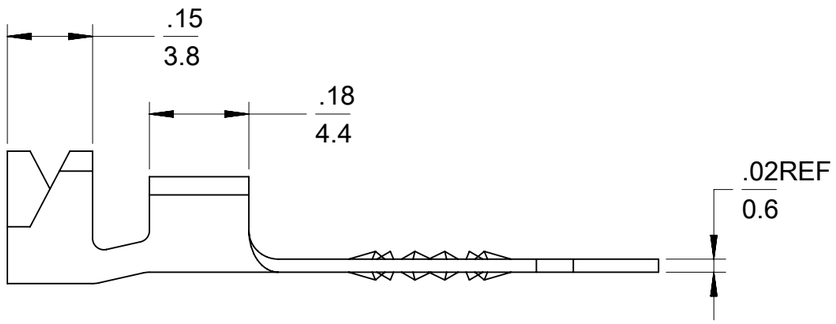

NOTE(S):

1. WIRE: SIZE: 18-14 AWG
   0.7 - 2.6 MM²
2. PARTS ARE RoHS COMPLAINT.

THIS DRAWING CONTAINS INFORMATION THAT IS PROPRIETARY TO MOLEX ELECTRONIC TECHNOLOGIES, LLC AND SHOULD NOT BE USED WITHOUT WRITTEN PERMISSION

DIMENSION UNITS	SCALE
INCH/MM	NTS

GENERAL TOLERANCES (UNLESS SPECIFIED)

	MM	INCH
4 PLACES	±	±
3 PLACES	±	± 0.005
2 PLACES	± 0.13	± 0.01
1 PLACE	± 0.25	±
0 PLACES	±	±
ANGULAR TOL	± 0.5 °	

DRAFT WHERE APPLICABLE MUST REMAIN WITHIN DIMENSIONS

CURRENT REV DESC: PLATING - TIN WAS NONE

EC NO: 659487
DRWN: CD 2020/05/19
CHK'D: JMACNEIL 2020/05/21
APPR: JMACNEIL 2021/03/29

INITIAL REVISION:
DRWN: JHACKNEY 1995/05/05
APPR: RDEROSS 1995/05/05

THIRD ANGLE PROJECTION | DRAWING: B-SIZE | SERIES: 19084

molex

OPEN BARREL STRIP
STAR RING, VIBRAKRIMP 18-14 AWG

PRODUCT CUSTOMER DRAWING

DOCUMENT NUMBER	DOC TYPE	DOC PART	REVISION
SD-19084-001	PSD	001	C1

MATERIAL NUMBER	CUSTOMER	SHEET NUMBER
SEE TABLE	GENERAL MARKET	1 OF 1

DOCUMENT STATUS	P1	RELEASE DATE	2021/03/29 21:18:49

FORMAT: Eng-lega-master-tb-prod-B
REVISION: E
DATE: 2020/01/14