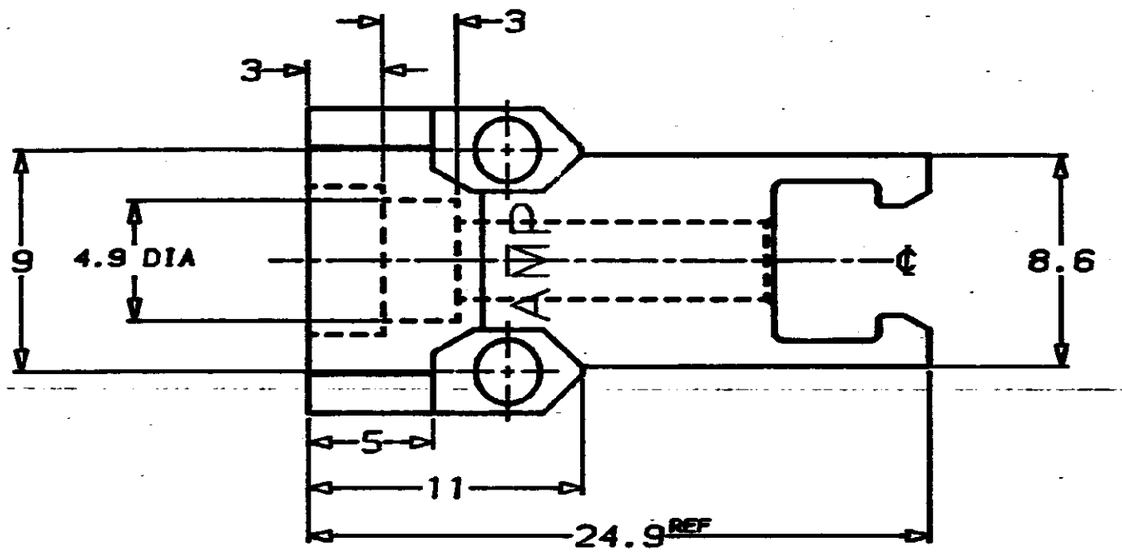

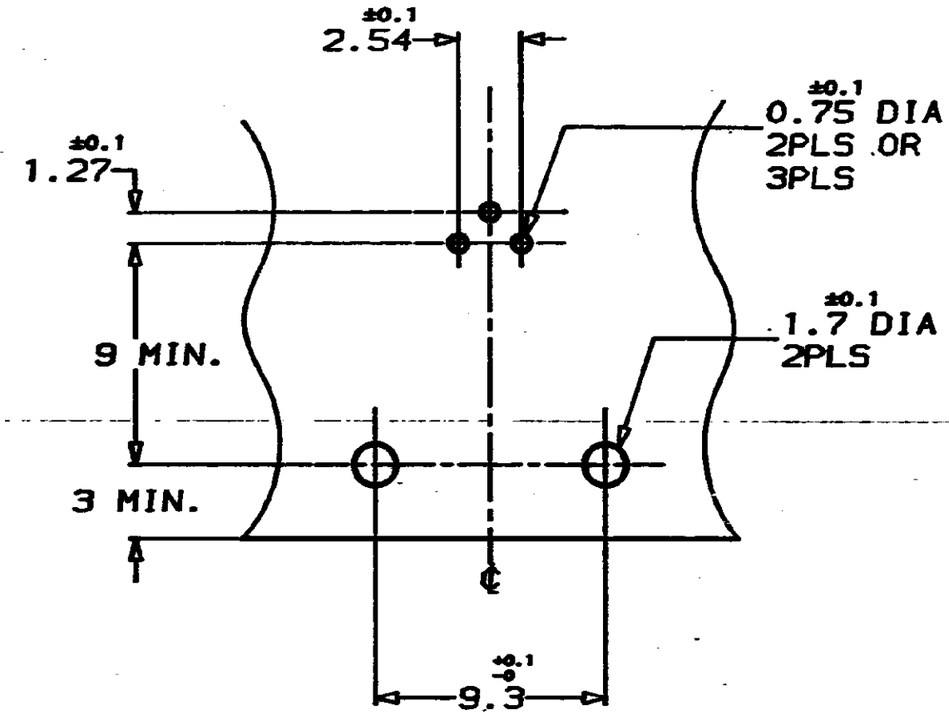

PCB LAYOUT
（基板取付寸法）

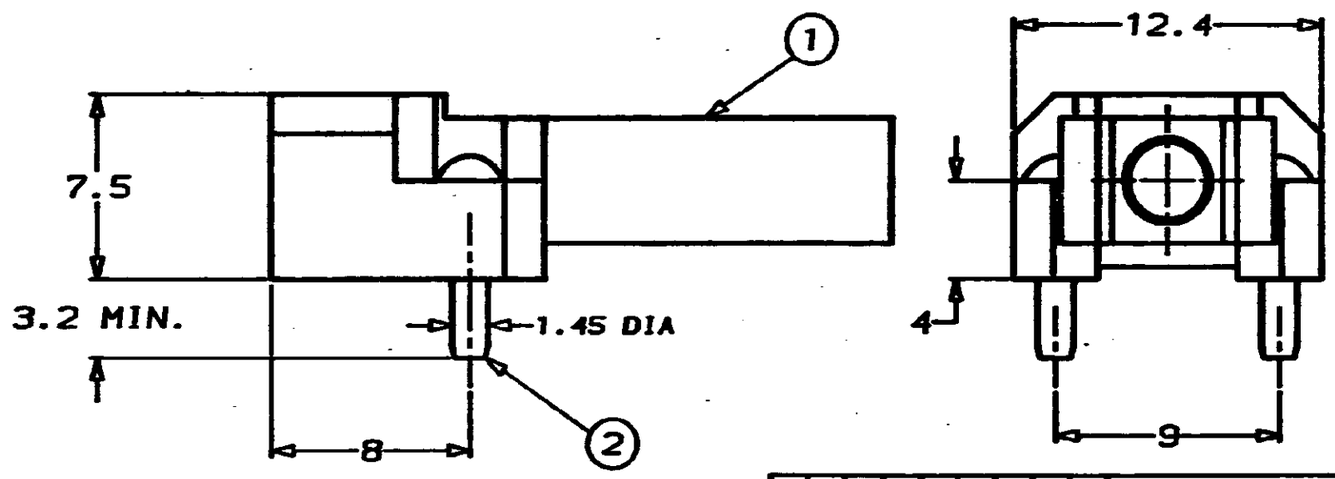

ITEM		NAME (P/N)
2	2	SOLDERING POST, DNP (P/N 171948-1)
1	-	ADM, MOLD, For TO-18, (RED BROWN), DNP (P/N 173079-2)
-	1	ADM, MOLD, For TO-18, (BLACK), DNP (P/N 173079-1)
-2	-1	

174065-※

LTR	REVISION RECORD	DR	CHK	DATE
0	RELEASED (J-90800)	KT	EY	2/17/86

© 1986 BY AMP (Japan) LTD.
ALL RIGHTS RESERVED.
AMP PRODUCTS COVERED BY PATENTS
AND OR PATENTS PENDING

AMP
AMP (JAPAN), LTD.
Tokyo, Japan

WIRE RANGE: mm² (AWG) – ×
INSULATION DIA: – mm
MATERIAL: —
FINISH: —
DR. 2/17/86 K. TAKAHASHI
CHK. EYOSHIKA 2/18/86
DE. 2/18/86
APP.

NAME: DNP. TO—18型素子用 アクティブ・デバイス・マウント・ポスト・アッセンブリ
ADM, POST ASS'Y, For TO-18, DNP

GENERAL TOLERANCE: 0<dim<10 : ±0.2; 10<dim<30 : ±0.25; 30<dim<100 : ±0.3; ANGLES : ±5°

SIZE	LOC	NUMBER
A3	J	C-174065

SCALE	REV.	SHEET
4-1	0	1 OF 1

CUSTOMER DRAWING

NUMBER C-174065
3rd ANGLE PROJECTION
METRIC
DIMENSIONS IN MILLIMETERS, DO NOT SCALE PRINT
PRINT DIST