THIS DRAWING IS UNPUBLISHED. RELEASED FOR PUBLICATION -,- .
© COPYRIGHT - By - ALL RIGHTS RESERVED.

LOC	DIST
G	14

REVISIONS

P	LTR	DESCRIPTION	DATE	DWN	APVD
	AJ1	REVISED PER ECO-11-004820	11MAR11	RK	HMR

AMP WIRE RANGE	Listed FILE E13288	LR7189 Certified
22-14 AWG SOLID OR STRANDED	22-14 AWG SOLID OR STRANDED	22-14 AWG SOLID OR STRANDED

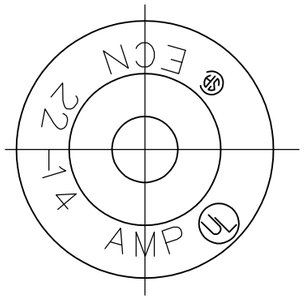

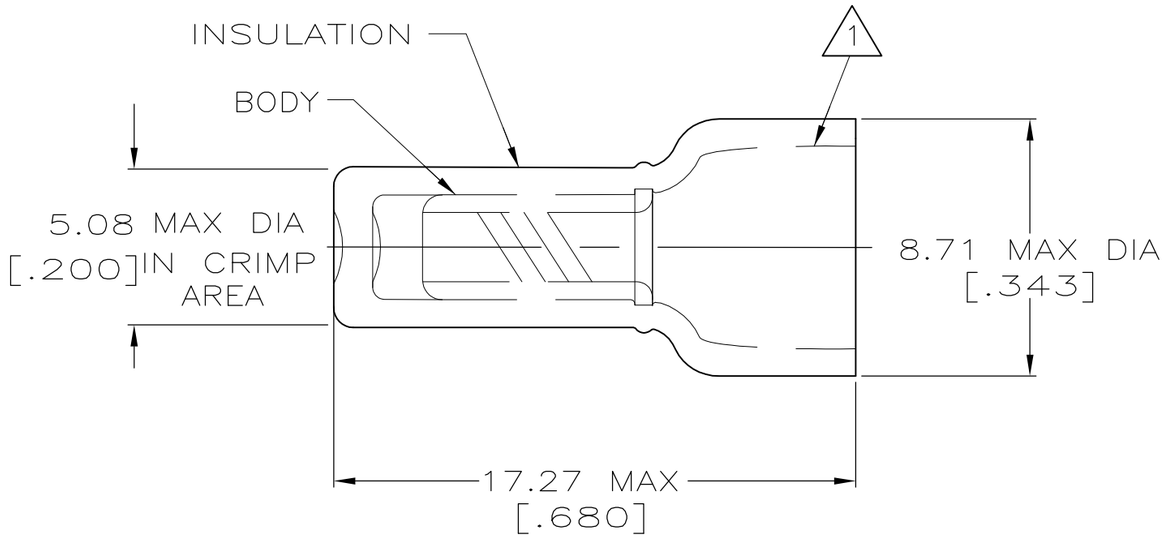

1. FOR 6.35 [.250] MAX WIRE INSULATION DIA
2. SUPERSEDED BY 35115
3. SUPERSEDED BY 8-35115-5
4. MATERIAL, BODY, COPPER INSULATION, NYLON
5. FINISH, BODY, TIN PLATE ASTM B545 INSULATION, COLOR NATURAL

QTY	DESCRIPTION	PART NO
25	LOOSE PC,BAG	8-35115-5
5	LOOSE PC,BLS	8-35115-4 (3)
100	LOOSE PC,BOX	8-35115-1
10000	SPECIAL PKG	1-35115-2 (2)
2500	TAPE MOUNTED	1-35115-0
1000	LOOSE PC,BOX	35115

AMP INCORPORATED
CUSTOMER SERVICE SYSTEMS

FOR ADDITIONAL PRODUCT INFORMATION OR COPIES OF DRAWINGS AND TECHNICAL DOCUMENTS	PRODUCT INFORMATION CENTER 1-800-522-6752
FOR APPLICATION TOOLING INFORMATION	TOOLING ASSISTANCE CENTER 1-800-722-1111
FOR ORDER ENTRY	1-800-526-5142

THIS DRAWING IS A CONTROLLED DOCUMENT FOR AMP INCORPORATED. IT IS SUBJECT TO CHANGE AND THE CONTROLLING ENGINEERING ORGANIZATION SHOULD BE CONTACTED FOR THE LATEST REVISION.

MAX RECOMMENDED OPERATING TEMPERATURE: 105° C MAX

VOLTAGE RATING: 300V MAX

CIRCULAR MIL AREA: 0.26-2.62mm² [509-5,180] SOLID OR STRANDED

THIS DRAWING IS A CONTROLLED DOCUMENT.

DIMENSIONS: INCHES

TOLERANCES UNLESS OTHERWISE SPECIFIED:

0 PLC	± -
1 PLC	± -
2 PLC	± 0.20[.008]
3 PLC	± -
4 PLC	± -
ANGLES	± -

MATERIAL - (4)

FINISH - (5)

DWN	JR RUTH	23MAR04
CHK	T MICHIELUTTI	23MAR04
APVD	T MICHIELUTTI	23MAR04
PRODUCT SPEC	—	
APPLICATION SPEC	—	
WEIGHT	—	

TE Connectivity

NAME: SPLICE, WIRE, CLOSED END

SIZE	CAGE CODE	DRAWING NO	RESTRICTED TO
A3	00779	C-35115	—

CUSTOMER DRAWING

SCALE	SHEET	REV
2:1	1 OF 1	AJ1

1470-19 (3/11)