THIS DRAWING IS UNPUBLISHED. RELEASED FOR PUBLICATION -.-.
© COPYRIGHT - BY TYCO ELECTRONICS CORPORATION. ALL RIGHTS RESERVED.

LOC	DIST
GP	00

REVISIONS

P	LTR	DESCRIPTION	DATE	DWN	APVD
	O	RELEASED PER EC 0513-0016-05	04-12-05	GA	JG

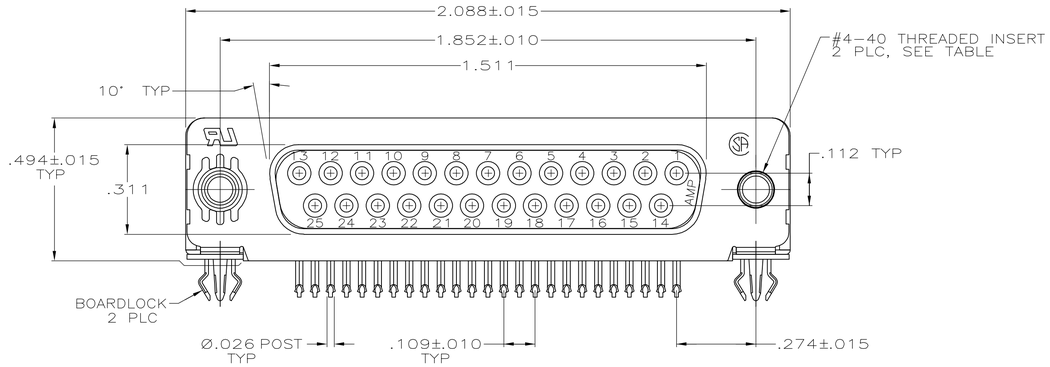

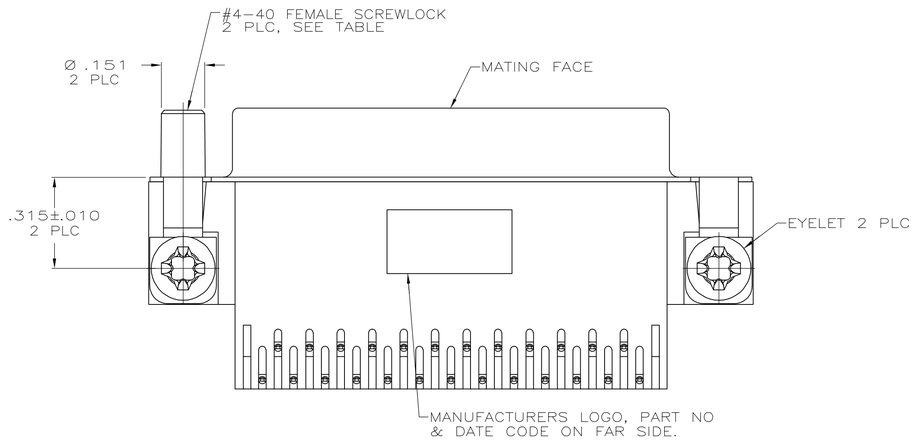

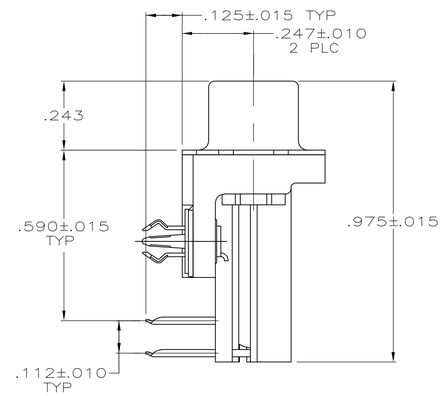

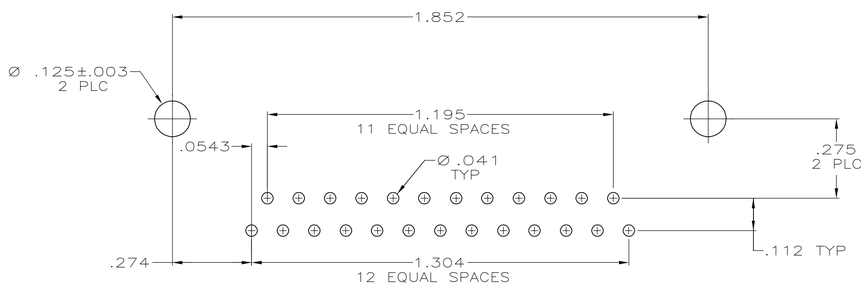

RECOMMENDED P.C. BOARD MOUNTING DIMENSIONS

1. HOUSING: NYLON OR POLYESTER, FLAME RETARDANT, UL 94V-O RATED, GLASS FILLED, BLACK.
   SHELL: CARBON STEEL
   CONTACTS: PHOSPHOR BRONZE
   EYELETS: BRASS
   SCREWLOCKS: ZINC
   INSERTS: ZINC
   BOARDLOCKS: COPPER ALLOY
2. SHELL: .000100 MIN TIN OVER .000050 MIN COPPER.
   EYELETS: .000100 MIN TIN OVER COPPER FLASH.
   CONTACTS: SEE TABLE
   BOARDLOCKS: .000150 MIN TIN OVER .000050 MIN NICKEL.
   INSERTS: CLEAR CHROMATE
   SCREWLOCKS: CLEAR CHROMATE
3. GOLD FLASH FOR A DISTANCE OF .100 MIN FROM MATING END, .000100 MIN TIN ON TERMINATION END, ALL OVER .000050 MIN NICKEL ON ENTIRE CONTACT.
4. .000030 MIN GOLD FOR A DISTANCE OF .100 MIN FROM MATING END, .000100 MIN TIN ON TERMINATION END, ALL OVER .000050 MIN NICKEL ENTIRE CONTACT.

MOUNTING HARDWARE	CONTACT FINISH	PART NUMBER
FEMALE SCREWLOCKS	4	5747838-6
THREADED INSERTS	4	5747838-4
THREADED INSERTS	3	5747838-3

COPYRIGHT 2005
TYCO ELECTRONICS CORP
ALL RIGHTS RESERVED

THIS DRAWING IS A CONTROLLED DOCUMENT.

DIMENSIONS: INCHES

TOLERANCES UNLESS OTHERWISE SPECIFIED:
0 PLC ± -
1 PLC ± -
2 PLC ± -
3 PLC ± .005
4 PLC ± -
ANGLES ± 2°

MATERIAL 1
FINISH 2

DWN 04-12-05 G. ATTADIA - DOCK5
CHK 04-12-05 S. BOLASH
APVD 04-12-05 M. WALMSLEY
PRODUCT SPEC 108-40025
APPLICATION SPEC 114-40010
WEIGHT -

tyco Electronics
Tyco Electronics Corporation
Harrisburg, PA 17105-3608

NAME RECEPTACLE ASSEMBLY, SIZE 3, 25 POSITION, RIGHT ANGLE, FRONT METAL SHELL, .590 SERIES, .026 DIA POSTS, BOARDLOCKS, AMPLIMITE HD-20

SIZE	CAGE CODE	DRAWING NO	RESTRICTED TO
A1	00779	C-5747838	-

CUSTOMER DRAWING | SCALE 4:1 | SHEET 1 OF 1 | REV O