MICRO SWITCH
a Honeywell Division
FED. MFG. CODE 91929

SWITCH - ENCLOSED

CATALOG LISTING
1EN51-6

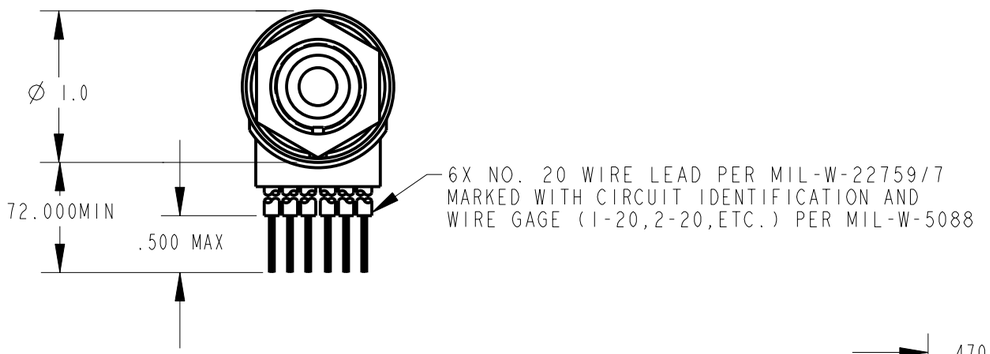

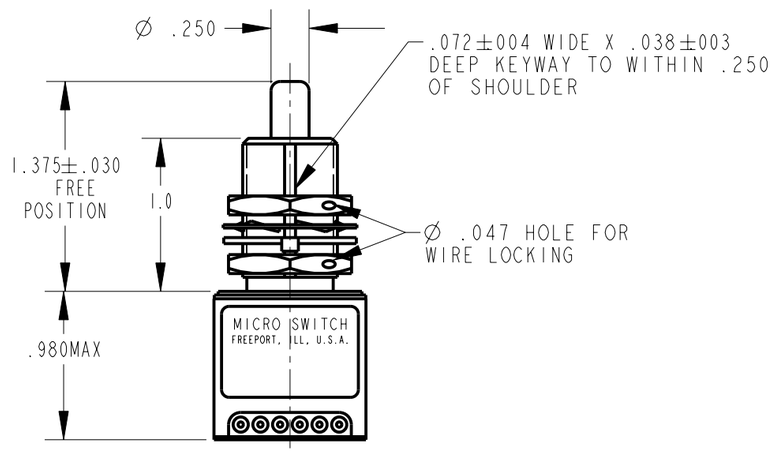

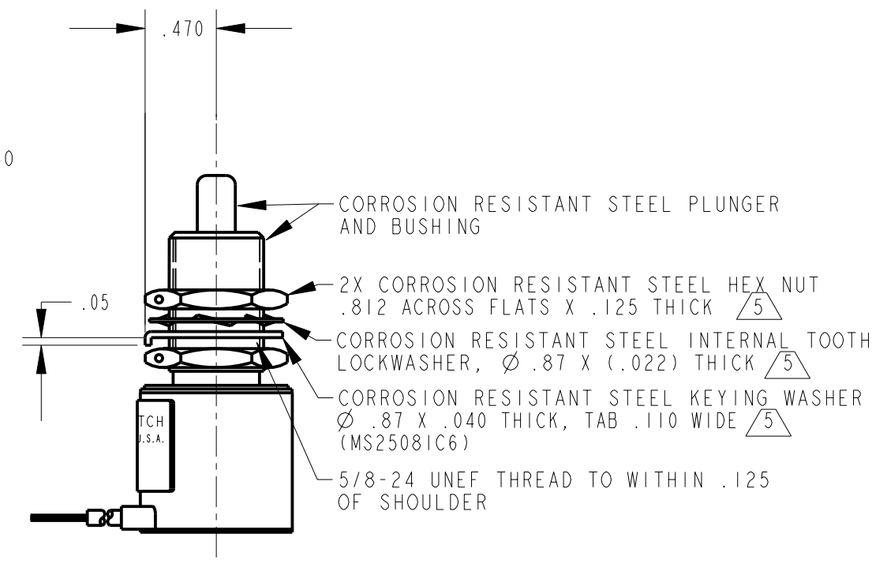

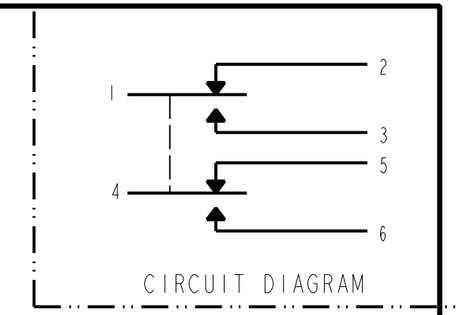

NOTES
1 - CORROSION RESISTANT STEEL ENCLOSURE
2 - SWITCH SEALED PER MIL-PRF-8805 SYMBOL 4
3 - COINCIDENCE OF OPERATING AND RELEASING POINTS:
.010 OF PLUNGER TRAVEL
4 - CIRCUIT DIAGRAM AND CATALOG LISTING ARE SHOWN ON NAMEPLATE
5 HARDWARE MAY BE PACKAGED UNASSEMBLED PER MIL-PRF-8805

THIS DRAWING COVERS A PROPRIETARY ITEM AND IS THE PROPERTY OF MICRO SWITCH. A DIVISION OF HONEYWELL. THIS DRAWING IS NOT TO BE COPIED OR USED WITHOUT THE APPROVAL OF MICRO SWITCH

THIRD ANGLE PROJECTION

SCALE FULL

DO NOT SCALE PRINT

UNLESS OTHERWISE SPECIFIED TOLERANCES ARE

ONE PLACE	(.0)	±.030
TWO PLACE	(.00)	±.015
THREE PLACE	(.000)	±.005
ANGLES		±

WEIGHT 7.5 OZ MAX

ANSI Y14.5M-1982 APPLIES

CHARACTERISTICS

OPERATING FORCE	3-6 LB
FULL OVERTRAVEL FORCE	17 LB MAX
RELEASE FORCE	2 LB MIN
PRETRAVEL	.040 MAX
DIFFERENTIAL TRAVEL	.020 MAX
OVERTRAVEL	.250 MIN

ELECTRICAL DATA

CONTACT ARRANGEMENT
2X S P D T

LOAD	28 VDC	
	SEA LEVEL	50,000 FT.
RES	4	4
IND	2	2
MOTOR	4	
LAMP		

CATALOG LISTING 1EN51-6
PAGE 1 OF 1
RELEASE NO. SR-5982
REPLACES
ISSUE 23
REVISIONS
A 205395 LJK 15APR02
CHECK
CHECK 15APR02
SAV
CHECK 15APR02
DRAWN LJK 15APR02
PTC/CAD 2D