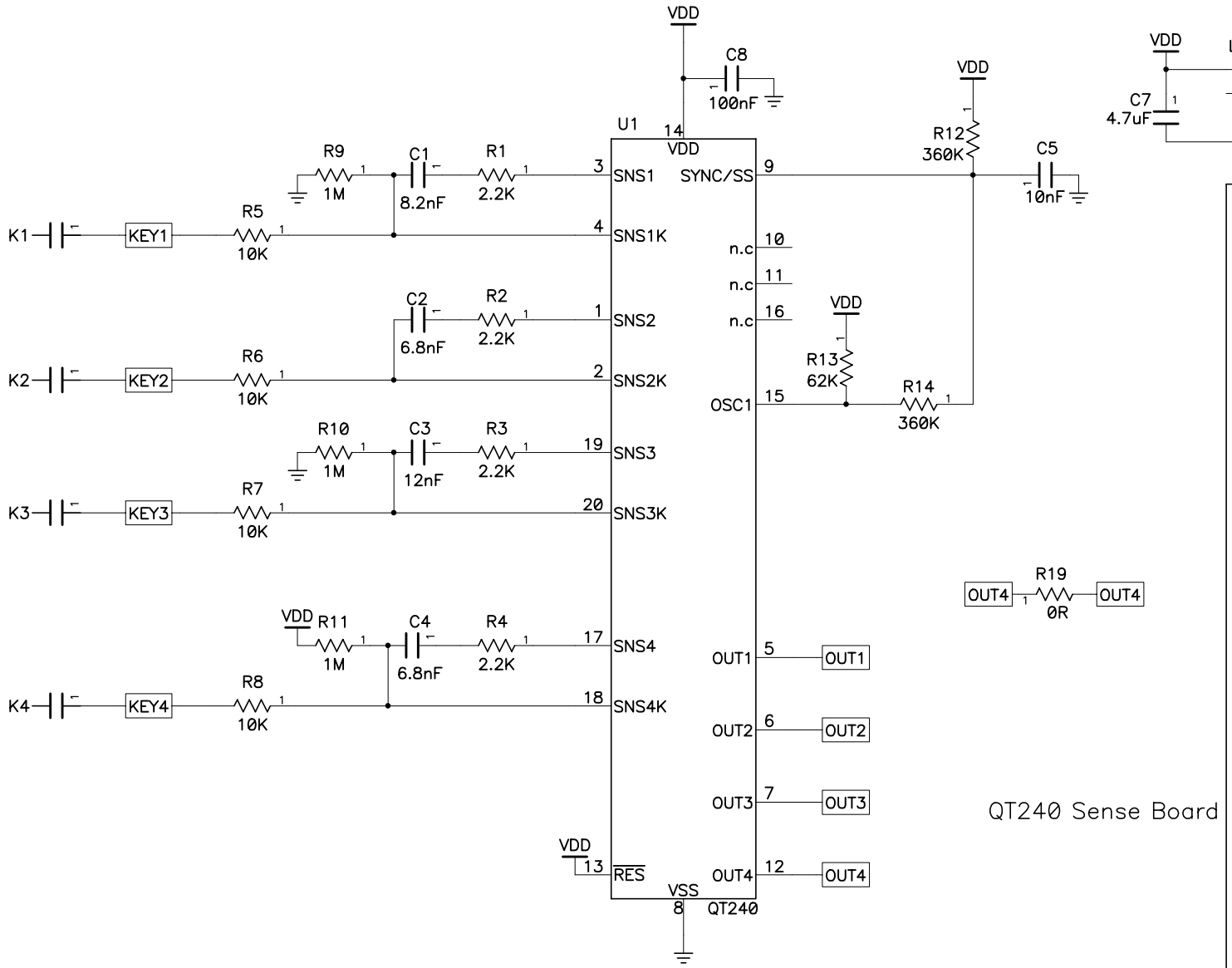

QT240 Sense Board

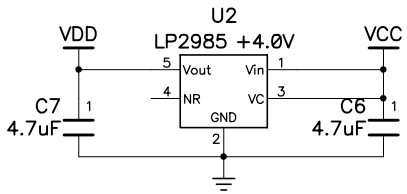

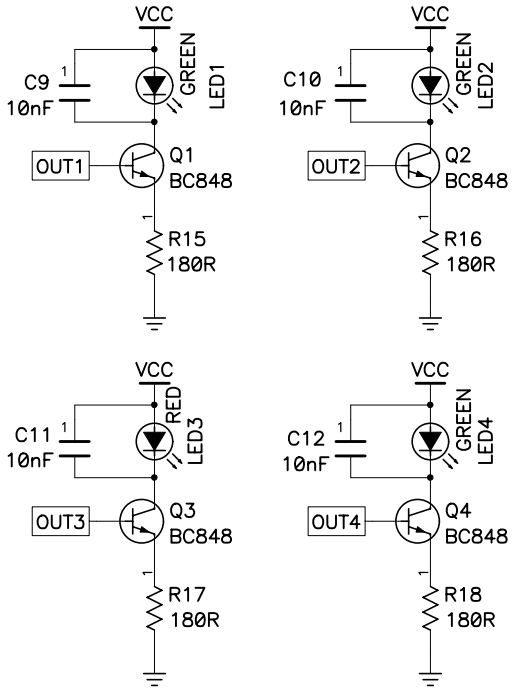

LED board

Battery Cable
Strain Relief Point

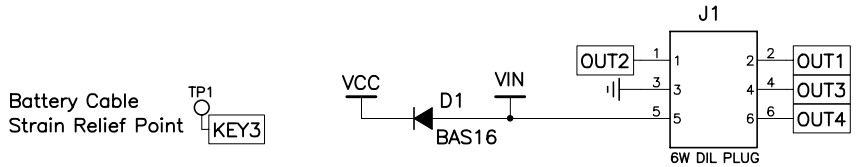

Iss	Notes	Drn	Date
1	LED capacitors fitted USB removed	MT	4th July 2005
C	USB Connector Added	MT	2nd June 2005
B	J1 pinout changed	MT	26th May 2005
A	First Issue	MT	3rd May 2005

Title: E240B Board

Number: E240B

Checked:

Filename: E240B-ISS-1.SCH

Approved:

Sheet 1 of 1 | Drn: M Trend

© 2005 Quantum Research Group - This drawing is confidential and must only be used for the purpose for which it was supplied. No part of this may be reproduced without prior permission from the owner.

QUANTUM RESEARCH GROUP