3 mm Square SMT Trimmer Potentiometers (Cermet, Sealed Type)

Type: **EVM7J**
EVM7L

■ Features

- 3 mm square types for flow and reflow soldering
- Cost saving filmless sealed structure
- Automatic adjustment type (EVM7L)
- Approved under the ISO 9001 system
- Conforms to JIS C5261

■ Recommended Applications

- Audio Visual equipment, Office Automation equipment, Communication equipment
- Other general electronic equipment

■ Explanation of Part Numbers

1	2	3	4	5	6	7	8	9	10	11	12
E	V	M	7					0	B		
Product Code			Type/Structure (7J, 7L)		Packaging				Taper & Resistance		

✻For details of Part Number, refer to page EV4.

■ Major Specifications

Total Resistance Value	100 Ω to 1 MΩ
Resistance Tolerance	±25 %
Power Rating	0.05 W
Maximum Operating Voltage	15 V
Rotation Torque	1 to 15 mN·m
Temperature Coefficient of Resistance	$\pm 250 \times 10^{-6}$/°C

■ Minimum Quantity/Packing Unit

Part Number	Taping			Bulk	
	Quantity per reel	Packaging quantity	Dia. of reel (mm)	Quantity per pack	Packaging quantity
EVM7J	1000	4000	ϕ178	1000	5000
	5000	20000	ϕ380		
EVM7L	750	3000	ϕ178		
	4000	16000	ϕ380		

Design, Specifications are subject to change without notice. Ask factory for technical specifications before purchase and/or use.
Whenever a doubt about safety arises from this product, please inform us immediately for technical consultation without fail.

■ Dimensions in mm (not to scale)

● 3-terminal, Filmless Sealed EVM7J

No. 1

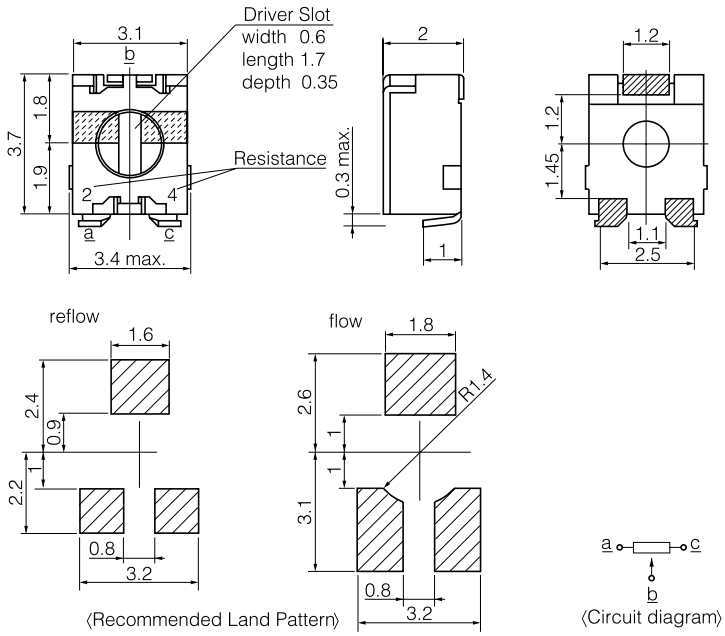

⟨Recommended Land Pattern⟩ ⟨Circuit diagram⟩

Note: Mounting not possible after trimming knob has been rotated.

● 3-terminal, Filmless Sealed for Automatic Trimming Adjustment EVM7L

No. 2

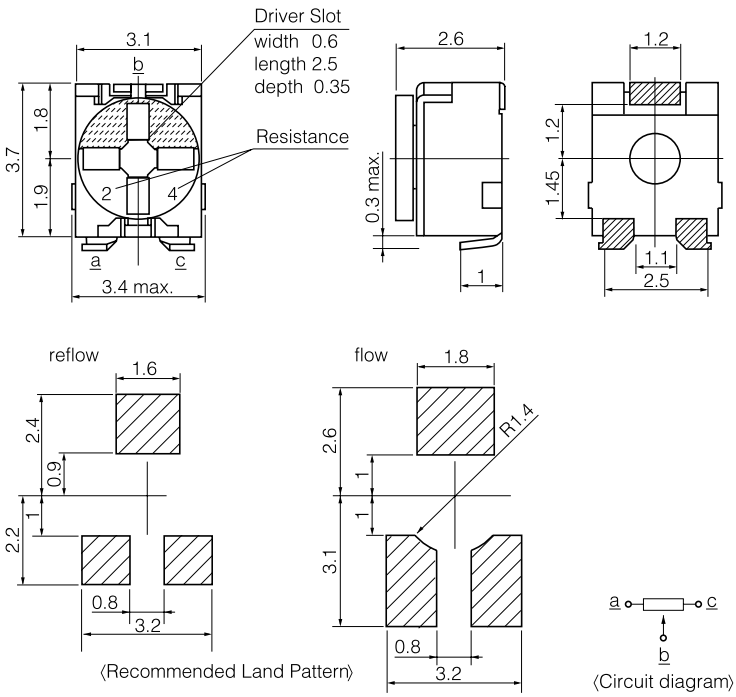

⟨Recommended Land Pattern⟩ ⟨Circuit diagram⟩

Note: Mounting not possible after trimming knob has been rotated.

Design, Specifications are subject to change without notice. Ask factory for technical specifications before purchase and/or use.
Whenever a doubt about safety arises from this product, please inform us immediately for technical consultation without fail.

■ Explanation of Part Numbers

Classification	Type	Symbol
Cermet	2 mm Open	EVM2W(low-profile)
	3 mm Open	EVM3Y, EVM3S EVM3W(low-profile) EVM3V(with rotation stopper)
	4 mm Open	EVM1D, EVM1E EVM1U
	3 mm Sealed	EVM7J, EVM7L
Carbon	3 mm Dustproof	EVN5E(with rotation stopper) EVN5C

10 th	11 th	12 th
Taper B	Significant Number of resistance	Number of zero

Example:

Resistance	Symbol
500 Ω	52
47 kΩ	Q4
1 MΩ	16

Note: When significant number is odd, letters are assigned as shown below.

11th	Significant number
C	1.5
E	2.2
Y	3.3
Q	4.7
S	6.8

1	2	3	4	5	6	7	8	9	10	11	12
E	V							0	B		
Product Code			Type/Structure		Packaging				Taper & Resistance		

6th	7th	Packaging
G	A	Cermet Bulk
S	W	Carrier tape (7th: Direction of insertion. Refer to Packaging Specifications)
	X	

8th	Quantity
0	750
1	5000
3	1000
4	4000
5	2000
6	12000
7	7500
8	3000

Refer to "Packaging Specifications" regarding packing quantity for each part number.

Design, Specifications are subject to change without notice. Ask factory for technical specifications before purchase and/or use.
Whenever a doubt about safety arises from this product, please inform us immediately for technical consultation without fail.