NO. OF CCTS	DIMN. "A"	DIMN. "B"
2	(5.08) .200	(2.54) .100
3	(7.62) .300	(5.08) .200
4	(10.16) .400	(7.62) .300
5	(12.70) .500	(10.16) .400
6	(15.24) .600	(12.70) .500
7	(17.78) .700	(15.24) .600
8	(20.32) .800	(17.78) .700
9	(22.86) .900	(20.32) .800
10	(25.40) 1.000	(22.86) .900
11	(27.94) 1.100	(25.40) 1.000
12	(30.48) 1.200	(27.94) 1.100
13	(33.02) 1.300	(30.48) 1.200
14	(35.56) 1.400	(33.02) 1.300
15	(38.10) 1.500	(35.56) 1.400
16	(40.64) 1.600	(38.10) 1.500

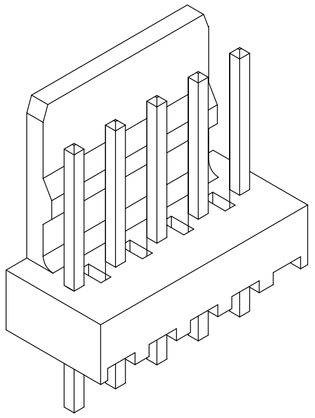

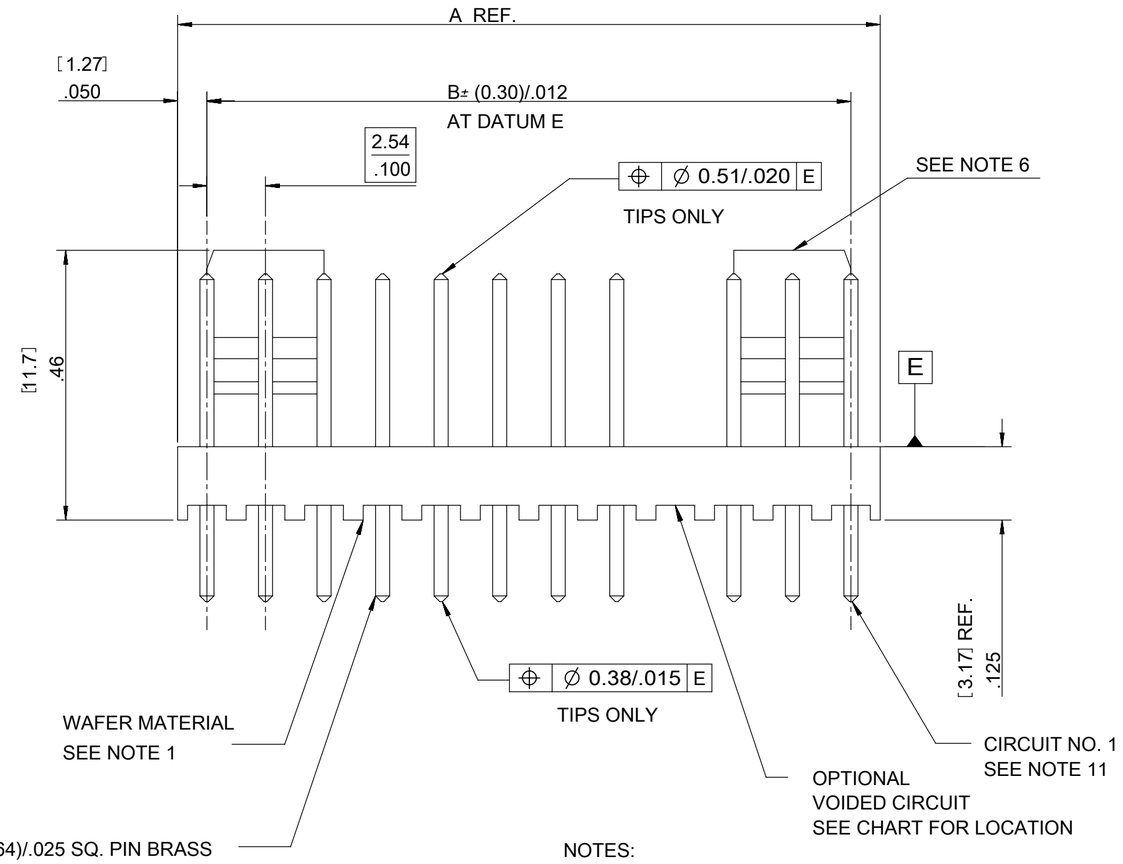

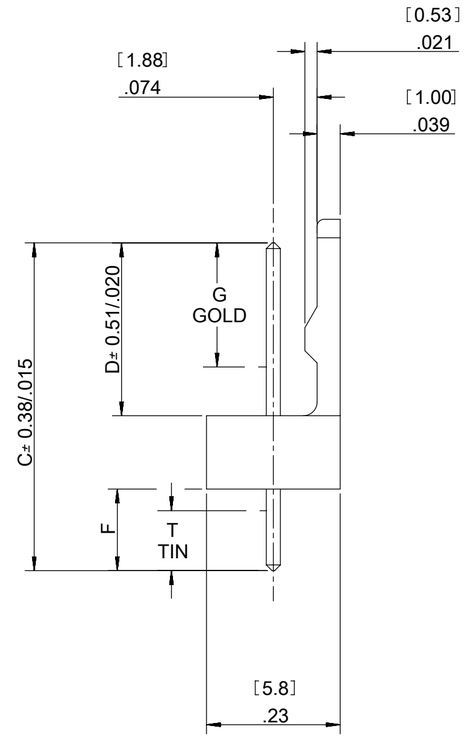

AE-6410- N * (*) - *

- NO. OF CCTS
- WAFER ASSY. OPTION
- PLATING TYPE
- VOIDED CIRCUIT CODE NO. CORRESPONDS TO CIRCUIT NO. VOIDED. MULTIPLE VOIDS START WITH 51 BLANK = NONE

NOTES:

1. WAFER MATERIAL: NYLON, UL94V-0, PIN MATERIAL: BRASS
2. FINISH:
   154 = OVERALL TIN: 0.00254/.00100 MIN. OVER 0.00127/.000050 MIN. NICKEL
   197 = OVERALL REFLOWED MATTE TIN: 0.00152/.00060 MIN. OVER 0.00127/.000050 MIN. NICKEL
   222 = OVERALL MATTE TIN: 0.00254/.00100 MIN. OVER 0.00127/.000050 MIN NICKEL
   228 = SELECT GOLD 0.00076/.000030 MIN., SELECT MATTE TIN: 0.00254/.00100 OVER 0.00127/.000050 MIN NICKEL
   231 = SELECT GOLD 0.00127/.000050 MIN., SELECT MATTE TIN: 0.00254/.00100 OVER 0.00076/.000030 MIN NICKEL
   241 = SELECT GOLD 0.00051/.000020 MIN., SELECT MATTE TIN: 0.00254/.00100 OVER 0.00076/.000030 MIN NICKEL
3. THIS PART CONFORMS TO MOLEX PROD. SPEC. PS-99020-0088.
4. PACKAGING: PER PK-6410-002
5. PIN SOLDERABILITY PER MOLEX SPEC. SMES-152.
6. SINGLE RAMP ON 2-6 CCTS TWO RAMPS ON 7-16 CCTS, AS SHOWN.
7. PIN PUSH OUT FORCE: (0.907 Kg)/2lbs MIN.
8. PCB THICKNESS 1.6MM
9. WAFERS STACKABLE END TO END WITH (2.54)/.100 BETWEEN END PINS
10. THIS PART CONFORMS TO CLASS B REQUIREMENTS OF COSMETIC SPECIFICATION PS-45499-002.
11. CIRCUIT 1 DESIGNATION IS USED TO DEFINE VOID LOCATION. CIRCUIT 1 MAY OR MAY NOT LINE UP WITH CIRCUIT 1 ON THE MATING HOUSING.

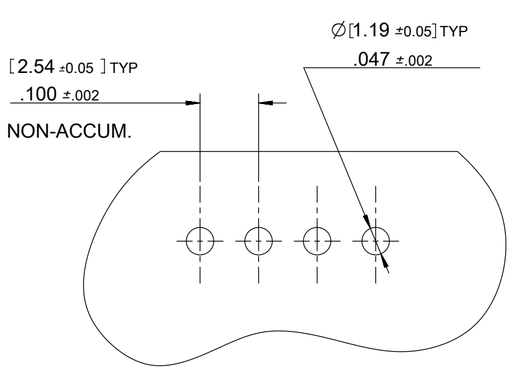

RECOMMENDED P.C.B. HOLE DIMENSIONS
(STANDARD SERIES)

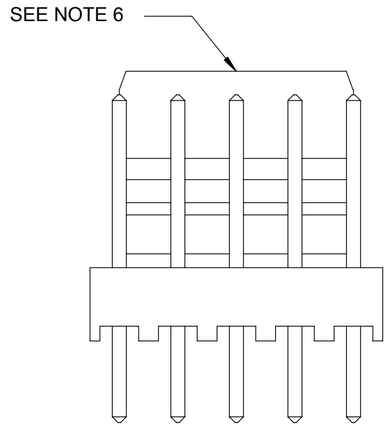

EM-6410-010
EM-6410-12A
EM-6410-12C

RELEASE STATUS	P1	RELEASE DATE	14.06.2016 16:45:46

QUALITY SYMBOLS: FA = 0; FE = 0; FD = 0; ▼ = 0; C = 0; ☒ = 0; ■ = 0; C = 0

ADD 46999-0696 — 2016/01/21
EC NO: 104930 — 2016/05/31
DRWN: MKIPPER — 2016/06/14
CHKD: JDFOX
APPR: FSMITH
REV: BC1

GENERAL TOLERANCES (UNLESS SPECIFIED)

	MM	INCH
4 PLACES	±	±
3 PLACES	±	± 0.01
2 PLACES	± 0.25	± 0.014
1 PLACES	± 0.35	±
0 PLACES	±	±

ANGULAR TOL ± 0.5

DRAFT WHERE APPLICABLE MUST REMAIN WITHIN DIMENSIONS

THIS DRAWING CONTAINS INFORMATION THAT IS PROPRIETARY TO MOLEX ELECTRONIC TECHNOLOGIES, LLC AND SHOULD NOT BE USED WITHOUT WRITTEN PERMISSION

DIMENSION UNITS: MM/IN — SCALE: 5:1
DRWN BY: T. MAHON — DATE: 28/01/03
CHK'D BY: BMAGUIRE — DATE: 28/01/03
APPR BY: JDENNEHY — DATE: 2005/03/11
DRAWING SIZE: C — THIRD ANGLE PROJECTION

molex®

WAFER, FRICTION LOCK
KK (2.54)/.100 FOR (0.64)/.025 SQ. PINS

PRODUCT CUSTOMER DRAWING

SERIES	MATERIAL NUMBER	CUSTOMER
6410	SEE CHART	GENERAL MARKET

DOCUMENT NUMBER	DOC TYPE	DOC PART	SHEET NUMBER
SDAE-6410-N	PSD	000	1 OF 4

FORMAT: Eng-tega-master-tb-prod-C
REVISION: C
DATE: 2016/02/04

ENG. NO.	AE-6410-NA (222)	AE-6410-NC (197)	AE-6410-NH (197)	AE-6410-NJ (197)	AE-6410-NL (154)	AE-6410-NM (154)
DIMN. "D"	(7.50) .295	(7.14) .281	(7.49) .295	(18.80) .740	(8.58) .338	(7.62) .300
DIMN. "C"	(14.22)/.560	(20.32)/.800	(14.98)/.590	(25.40)/1.000	(23.88)/.940	(20.32)/.800
DIMN. "F"	(3.56)/.140 REF	(10.00)/.394 REF	(4.32)/.170 REF	(3.43)/.135 REF	(12.13).477 REF	(9.53)/.375 REF
DIMN. "G"	N/A	N/A	N/A	N/A	N/A	N/A
DIMN. "T"	OVERALL	OVERALL	OVERALL	OVERALL	OVERALL	OVERALL
PLATING	222	197	197	197	154	154

NO. OF CIRCUITS											
2	AE-6410-2A(222)	22-27-2021	AE-6410-2C(197)	38-00-6292	AE-6410-2H(197)	38-00-6754	AE-6410-2J(197)	NOT TOOLED	AE-6410-2L(154)	NOT TOOLED	AE-6410-2M(154)	NOT TOOLED
3	3 A(222)	2031	3 C(197)	6293	3 H(197)	NOT TOOLED	3 J(197)	NOT TOOLED	3 L(154)	26-01-3195	3 M(154)	26-01-3179
4	4 A(222)	2041	4 C(197)	6294	4 H(197)	22-27-2046	4 J(197)	NOT TOOLED	4 L(154)	NOT TOOLED	4 M(154)	NOT TOOLED
5	5 A(222)	2051	5 C(197)	6295	5 H(197)	NOT TOOLED	5 J(197)	22-27-2057	5 L(154)		5 M(154)	NOT TOOLED
6	6 A(222)	2061	6 C(197)	6296	6 H(197)		6 J(197)	NOT TOOLED	6 L(154)		6 M(154)	NOT TOOLED
7	7 A(222)	2071	7 C(197)	6297	7 H(197)		7 J(197)	NOT TOOLED	7 L(154)		7 M(154)	46999-0696
8	8 A(222)	2081	8 C(197)	6298	8 H(197)		8 J(197)	22-27-2087	8 L(154)		8 M(154)	NOT TOOLED
9	9 A(222)	2091	9 C(197)	6299	9 H(197)		9 J(197)	NOT TOOLED	9 L(154)		9 M(154)	
10	10 A(222)	2101	10 C(197)	6300	10 H(197)		10 J(197)		10 L(154)		10 M(154)	
11	11 A(222)	2111	11 C(197)	6301	11 H(197)	NOT TOOLED	11 J(197)		11 L(154)		11 M(154)	
12	12 A(222)	2121	12 C(197)	6302	12 H(197)	22-27-2126	12 J(197)		12 L(154)		12 M(154)	
13	13 A(222)	2131	13 C(197)	6303	13 H(197)	NOT TOOLED	13 J(197)		13 L(154)		13 M(154)	
14	14 A(222)	2141	14 C(197)	6304	14 H(197)		14 J(197)		14 L(154)	NOT TOOLED	14 M(154)	
15	15 A(222)	2151	15 C(197)	6305	15 H(197)		15 J(197)		15 L(154)	38-00-1736	15 M(154)	
16	AE-6410-16A(222)	22-27-2161	AE-6410-16C(197)	38-00-6306	AE-6410-16H(197)	NOT TOOLED	AE-6410-16J(197)	NOT TOOLED	AE-6410-16L(154)	NOT TOOLED	AE-6410-16M(154)	NOT TOOLED

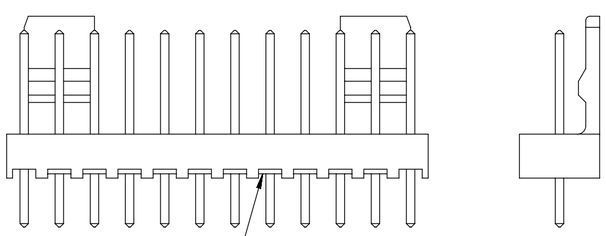

RIBS ADDED
(4-16 CCTS. ONLY)

ALTERNATIVE WAFER CONFIGURATION

QUALITY SYMBOLS
FA = 0
FC = 0
FD = 0
= 0
C = 0
= 0
= 0
C = 0

THIS DRAWING CONTAINS INFORMATION THAT IS PROPRIETARY TO MOLEX ELECTRONIC TECHNOLOGIES, LLC AND SHOULD NOT BE USED WITHOUT WRITTEN PERMISSION

ADD 46999-0696
EC NO: 104930 2016/01/21
DRWN: MKIPPER 2016/05/31
CHKD: JDFOX 2016/06/14
APPR: FSMITH
REV BC1

GENERAL TOLERANCES (UNLESS SPECIFIED)

	MM	INCH
4 PLACES	±	±
3 PLACES	±	± 0.01
2 PLACES	± 0.25	± 0.014
1 PLACES	± 0.35	±
0 PLACES	±	±

ANGULAR TOL ± 0.5

DRAFT WHERE APPLICABLE MUST REMAIN WITHIN DIMENSIONS

DIMENSION UNITS: MM/IN
SCALE: 5:1
DRWN BY: T. MAHON DATE: 28/01/03
CHK'D BY: BMAGUIRE DATE: 28/01/03
APPR BY: JDENNEHY DATE: 2005/03/11
DRAWING SIZE: C
THIRD ANGLE PROJECTION

molex®

WAFER, FRICTION LOCK
KK (2.54)/.100 FOR (0.64)/.025 SQ. PINS

PRODUCT CUSTOMER DRAWING

SERIES	MATERIAL NUMBER	CUSTOMER
6410	SEE CHART	GENERAL MARKET

DOCUMENT NUMBER	DOC TYPE	DOC PART	SHEET NUMBER
SDAE-6410-N	PSD	000	2 OF 4

RELEASE STATUS	P1	RELEASE DATE	14.06.2016 16:45:46

FORMAT: Eng-tega-master-tb-prod-C
REVISION: C
DATE: 2016/02/04

ENG. NO.	AE-6410-NA (241)	AE-6410-NC (241)	AE-6410-NA (231)	AE-6410-NS (241)	AE-6410-NA (228)
DIMN. "D"	(7.50) .295	(7.14) .281	(7.50) .295	(7.50) .295	(7.50) .295
DIMN. "C"	(14.22)/.560	(20.32)/.800	(14.22)/.560	(16.51)/.650	(14.22)/.560
DIMN. "F"	(3.56)/.140 REF	(10.00)/.394 REF	(3.56)/.140 REF	(5.84)/.230 REF	(3.56)/.140 REF
DIMN. "G"	(3.56)/.140	(5.08)/.200	(3.56)/.140	(5.08)/.200	(3.56)/.140
DIMN. "T"	(3.43)/.135	(5.08)/.200	(3.43)/.135	(5.08)/.200	(3.43)/.135
PLATING	241	241	231	241	228

NO. OF CIRCUITS											
2	AE-6410-2A(241)	22-29-2021	AE-6410-2C(241)	NOT TOOLED	AE-6410-2A(231)	38-00-7250		NOT TOOLED	AE-6410-2A(228)	38-00-7062
3	3 A(241)	2031	3 C(241)	38-00-5909	3 A(231)	NOT TOOLED		NOT TOOLED	3 A(228)	7063
4	4 A(241)	2041	4 C(241)	NOT TOOLED	4 A(231)	38-00-7251	AE-6410-4S(241)	38-00-7666	4 A	7064
5	5 A(241)	2051	5 C(241)		5 A(231)	NOT TOOLED		NOT TOOLED	5 A	7065
6	6 A(241)	2061	6 C(241)		6 A(231)		6 S(241)	38-00-7667	6 A	7066
7	7 A(241)	2071	7 C(241)		7 A(231)			NOT TOOLED	7 A	7067
8	8 A(241)	2081	8 C(241)		8 A(231)				8 A	38-00-7068
9	9 A(241)	2091	9 C(241)		9 A(231)				9 A	NOT TOOLED
10	10 A(241)	2101	10 C(241)		10 A(231)				10 A	NOT TOOLED
11	11 A(241)	2111	11 C(241)		11 A(231)				11 A	NOT TOOLED
12	12 A(241)	2121	12 C(241)		12 A(231)				12 A	38-00-7072
13	13 A(241)	2131	13 C(241)		13 A(231)				13 A	NOT TOOLED
14	14 A(241)	2141	14 C(241)		14 A(231)				14 A	38-00-7074
15	15 A(241)	2151	15 C(241)		15 A(231)				15 A	NOT TOOLED
16	AE-6410-16A(241)	22-29-2161	AE-6410-16C(241)	NOT TOOLED	AE-6410-16A(231)	NOT TOOLED		NOT TOOLED	AE-6410-16A(228)	NOT TOOLED

QUALITY SYMBOLS	
FA	= 0
FC	= 0
FD	= 0
▼	= 0
C	= 0
☒	= 0
■	= 0
G	= 0

THIS DRAWING CONTAINS INFORMATION THAT IS PROPRIETARY TO MOLEX ELECTRONIC TECHNOLOGIES, LLC AND SHOULD NOT BE USED WITHOUT WRITTEN PERMISSION

ADD 46999-0696 2016/01/21
EC NO: 104930 2016/05/31
DRWN: MKIPPER
CHK'D: JDFOX
APPR: FSMITH 2016/06/14
REV BC1

GENERAL TOLERANCES (UNLESS SPECIFIED)

	MM	INCH
4 PLACES	±	±
3 PLACES	±	± 0.01
2 PLACES	± 0.25	± 0.014
1 PLACES	± 0.35	±
0 PLACES	±	±

ANGULAR TOL ± 0.5

DRAFT WHERE APPLICABLE MUST REMAIN WITHIN DIMENSIONS

DIMENSION UNITS: MM/IN
SCALE: 5:1
DRWN BY: T. MAHON DATE: 28/01/03
CHK'D BY: BMAGUIRE DATE: 28/01/03
APPR BY: JDENNEHY DATE: 2005/03/11
DRAWING SIZE: C
THIRD ANGLE PROJECTION

molex®

WAFER, FRICTION LOCK
KK (2.54)/.100 FOR (0.64)/.025 SQ. PINS

PRODUCT CUSTOMER DRAWING

SERIES	MATERIAL NUMBER	CUSTOMER
6410	SEE CHART	GENERAL MARKET

DOCUMENT NUMBER	DOC TYPE	DOC PART	SHEET NUMBER
SDAE-6410-N	PSD	000	3 OF 4

RELEASE STATUS	P1	RELEASE DATE	14.06.2016 16:45:46

FORMAT: Eng-legs-master-tb-prod-C
REVISION: C
DATE: 2016/02/04

VOIDED CIRCUIT OPTION

ENG. NO.	AE-6410-NA(197)-*
DIM. D	7.50/.295
DIM. C	14.22 /.560
DIM. F (REF)	3.56 /.140
DIM. G	N/A
DIM. T	OVERALL
PLATING	197

PART No.	ENG No.	CKT SIZE	VOID LOCATION
38-00-7222	AE-6410-3A(197)-2	3	2
4749	-4A(197)-3	4	3
0611	-5A(197)-3	5	3
0089	-6A(197)-3	6	3
0090	-6A(197)-51	6	3,4,5
5370	-15A(197)-02	15	2
7688	-12A(197)-09	12	9

QUALITY SYMBOLS
FA = 0
FC = 0
FD = 0
▼ = 0
C = 0
☒ = 0
■ = 0
C = 0

THIS DRAWING CONTAINS INFORMATION THAT IS PROPRIETARY TO MOLEX ELECTRONIC TECHNOLOGIES, LLC AND SHOULD NOT BE USED WITHOUT WRITTEN PERMISSION

ADD 46999-0696
EC NO: 104930 2016/01/21
DRWN: MKIPPER 2016/05/31
CHK'D: JDFOX 2016/06/14
APPR: FSMITH
REV BC1

GENERAL TOLERANCES (UNLESS SPECIFIED)

	MM	INCH
4 PLACES	±	±
3 PLACES	±	± 0.01
2 PLACES	± 0.25	± 0.014
1 PLACES	± 0.35	±
0 PLACES	±	±

ANGULAR TOL ± 0.5

DRAFT WHERE APPLICABLE MUST REMAIN WITHIN DIMENSIONS

DIMENSION UNITS: MM/IN
SCALE: 5:1
DRWN BY: T. MAHON DATE: 28/01/03
CHK'D BY: BMAGUIRE DATE: 28/01/03
APPR BY: JDENNEHY DATE: 2005/03/11
DRAWING SIZE: C
THIRD ANGLE PROJECTION

molex®

WAFER, FRICTION LOCK
KK (2.54)/.100 FOR (0.64)/.025 SQ. PINS

PRODUCT CUSTOMER DRAWING

SERIES	MATERIAL NUMBER	CUSTOMER
6410	SEE CHART	GENERAL MARKET

DOCUMENT NUMBER	DOC TYPE	DOC PART	SHEET NUMBER
SDAE-6410-N	PSD	000	4 OF 4

RELEASE STATUS	P1	RELEASE DATE	14.06.2016 16:45:46

FORMAT: Eng-tega-master-tb-prod-C
REVISION: C
DATE: 2016/02/04