PRODUCT NUMBER
95293–XXX–XXLF

RoHS COMPATIBLE, SEE NOTE 6
TOTAL NB OF POSITIONS, 3 TO 17
PACKAGING TYPE, NOTE 3
PLATING

1= 0.76µm GOLD/GXT ON CONTACT AREA, 2µm TIN MIN ON TAILS

4= 2.0µm TIN MIN FULL PLATED

5= 0.25µm GOLD/GXT ON CONTACT AREA, 2µm TIN MIN ON TAILS

8= 0.38µm GOLD/GXT ON CONTACT AREA, 2µm TIN MIN ON TAILS

1.27µm NICKEL MIN UNDERLAYER FOR ALL PLATING VERSIONS

CATALOGUE RANGE	
PIN STYLE	MATING
01	5.84
02	8.08

APPLICATION SPECIFIC	
PIN STYLE	MATING
05	9.60
06	3.00

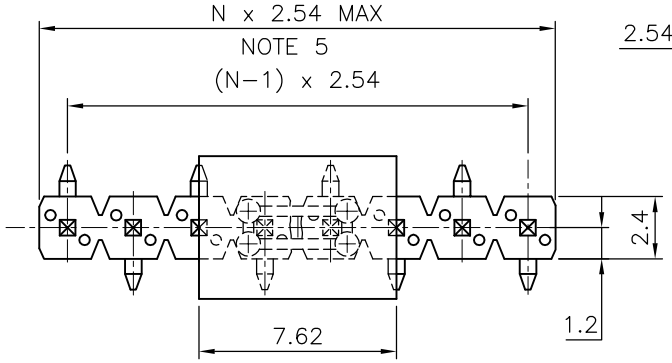

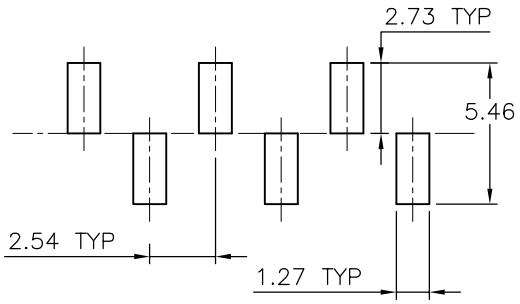

RECOMMENDED PAD LAYOUT

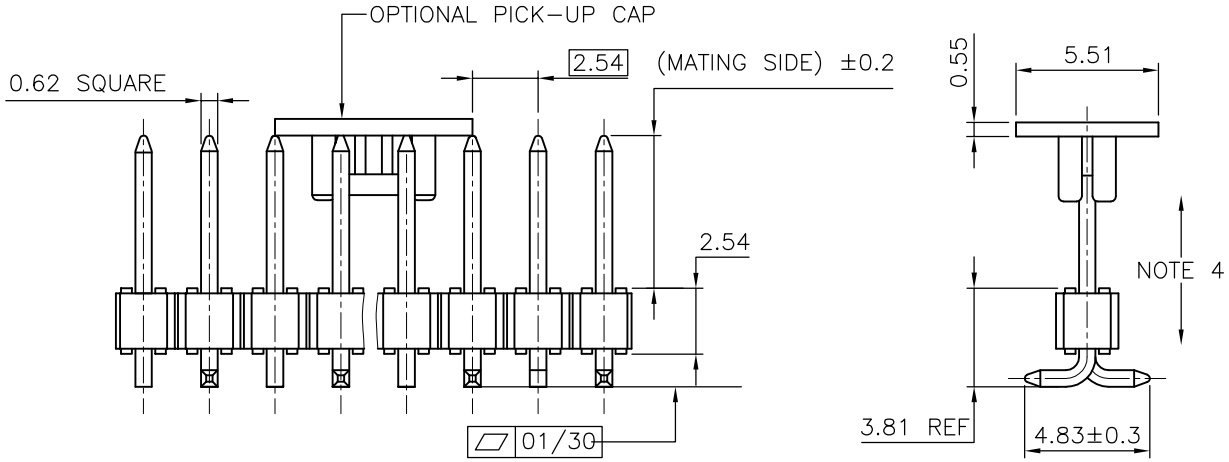

NOTES:

1 – HOUSING MAT'L : HIGH TEMPERATURE THERMOPLASTIC. UL94V–0 COLOR: BLACK

2 – PIN MATERIAL : PHOSPHOR BRONZE

3 – PACKAGING
– = POLY BAGS
B = TUBE + CAP
A = TAPE & REEL + CAP, SEE TA840 FOR PRODUCT AVAILABILIY

4 – 9N MIN RETENTION IN EITHER DIRECTION

5 – TO DETERMINE DIMENSIONS :
N = NUMBER OF POSITIONS
EXAMPLE : 8 POS N x 2.54 = 20.32mm

6. RoHS COMPATIBLE PRODUCT SPECIFICATIONS

a – PLATING:
– "LF" MEANS THE PRODUCT IS LEAD–FREE, 2µm MINIMUM MATTE TIN OVER 1.27µm MINIMUM NICKEL UNDERPLATE.

b – MANUFACTURING PROCESS COMPATIBILITY
– THE HOUSING WILL WITHSTAND EXPOSURE TO 260°C PEAK TEMPERATURE FOR 30 SECONDES IN A CONVECTION, INFRA–RED OR VAPOR PHASE REFLOW OVEN.

c – LABELING:
– MEETS PACKAGING SPECS AS PER GS–14–920

d – LEGAL STATEMENT: SEE GS–47–0004

ltr	ecn no	dr	date
P	B–18983	LMU	14.10.03
R	B–20569	AMA	15.03.26
K	F04–0362	JCO	04.12.10
L	F06–0208	JCO	06.06.22
M	F08–0148	RTR	08.03.31
N	F10–0207	JCO	10.09.09

mat'l. code: SEE NOTES
surface: ISO 1302
tolerance: ISO 406 ISO 1101
tolerances unless otherwise specified
angles: 0° ±2°
linear: x.x ±0.3; x.xx ±0.13; x.xxx ±0.05

dr	D.LE	01.01.24
engr	JM.C	01.01.24
chr	JM.C	01.01.24
appd	JF.N	01.01.24

projection
mm
scale 5:1

product family: BERGSTIK
title: UNSHR.HEADER SR SMT
dwg no: 95293
sheet 1 of 1
size: A3
type: CUSTOMER Drawing

sheet index | revision sheet

form: A3

Copyright FCI
FCIconnect.com