PART NO.	HOLDING CAPACITY "A"	"B" ±.015 (0.4)	"C" ±.02 (0.5)	"D" AT. MAX CAPACITY REF.
KKC–2–RT	1/8 (3.2)	3/4 (19.1)	.750 (19.1)	.31 (7.9)
KKC–3–RT	3/16 (4.8)			.33 (8.4)
KKC–4–RT	1/4 (6.4)			.42 (10.7)
KKC–5–RT	5/16 (7.9)			.48 (12.2)
KKC–6–RT	3/8 (9.5)			.60 (15.2)
KKC–8–RT	1/2 (12.7)	1 (25.4)	1.000 (25.4)	.69 (17.5)
KKC–12–RT	3/4 (19.1)			.94 (23.9)

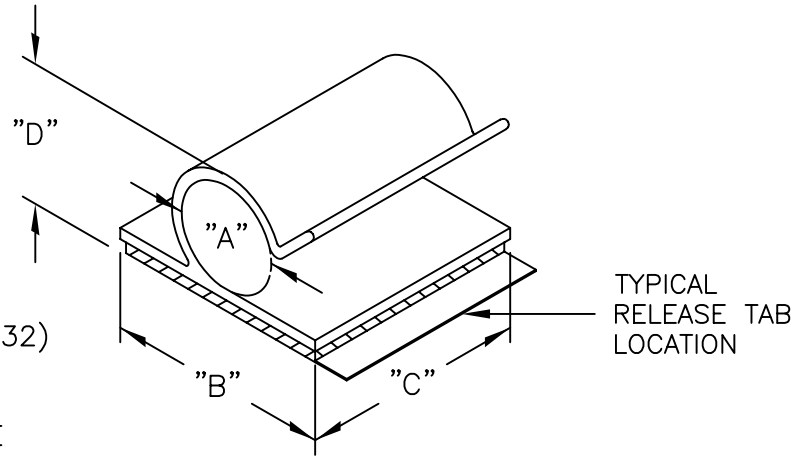

NOTES:
1. MATERIAL: RIGID PVC (RMS–04).
   ALSO AVAILABLE IN CLEAR PVC (RMS–32)
   BY SPECIAL ORDER.
2. COLOR: GRAY.
3. 1/16" THICK DOUBLE SIDED ADHESIVE
   ACRYLIC TAPE (RMS–15), WHITE LINER.
4. 1/16" THICK DOUBLE SIDED ADHESIVE
   RUBBER TAPE (RMS–102), BLUE LINER.
   BY SPECIAL ORDER ONLY.
   TO ORDER USE P/N: KKC–X–A1–RT.
5. CUSTOM LENGTHS AVAILABLE BY SPECIAL ORDER.

REV	DESCRIPTION	ENGR DATE
D	CHANGED NOTE 1, ADDED NOTE 5	SJ 03.14.02
C	CHANGED NOTE 3. AND ADDED NOTE 4.	SM 05.31.01
B	COMPLETELY RE–DRAWN & CHANGED FILE #	SM 11.14.00
A	ADDED NOTES, CORRECTED TAPE THICKNESS TO 1/16"	JK 2.10.00

TITLE: KWIK–KLIP, TYPE "C"

DWG IN IN (MM)

TOLERANCES UNLESS NOTED
.XX=±.020
.XXX=±.015
FRAC=±1/64
ANG=±1°

FILE # KKC
MAT'L: SEE NOTES
RE: RICHCO, INC.

DWN: S.M.
DT: 11/14/00

APP:
DT:

RICHCO INC.
PO BOX 804238,CHICAGO,60680
(773) 539–4060

FINAL

PART # SEE TABLE

PRINT TYPE CA