THIS DRAWING IS UNPUBLISHED. RELEASED FOR PUBLICATION 2009
© COPYRIGHT 2009 BY - ALL RIGHTS RESERVED.

REVISIONS

| P | LTR | DESCRIPTION | DATE | DWN | APVD |
|---|---|---|---|---|---|
| | B1 | REVISED PER ECO-17-009774 | 06SEP2017 | M.G. | M.G. |

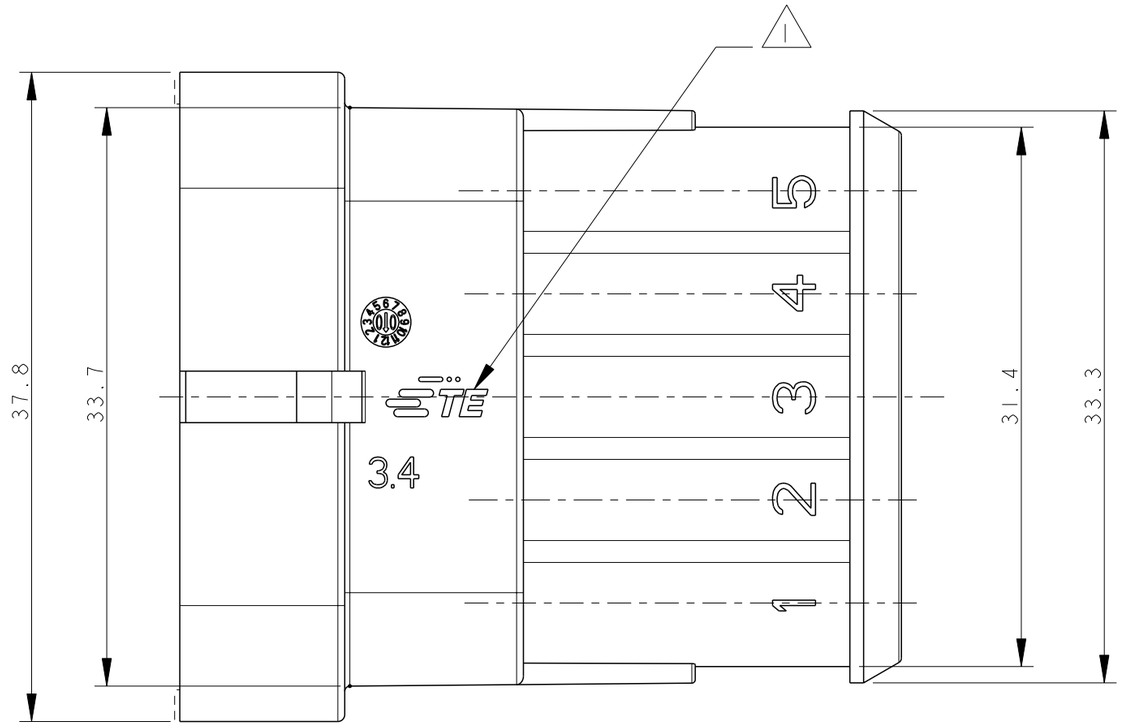


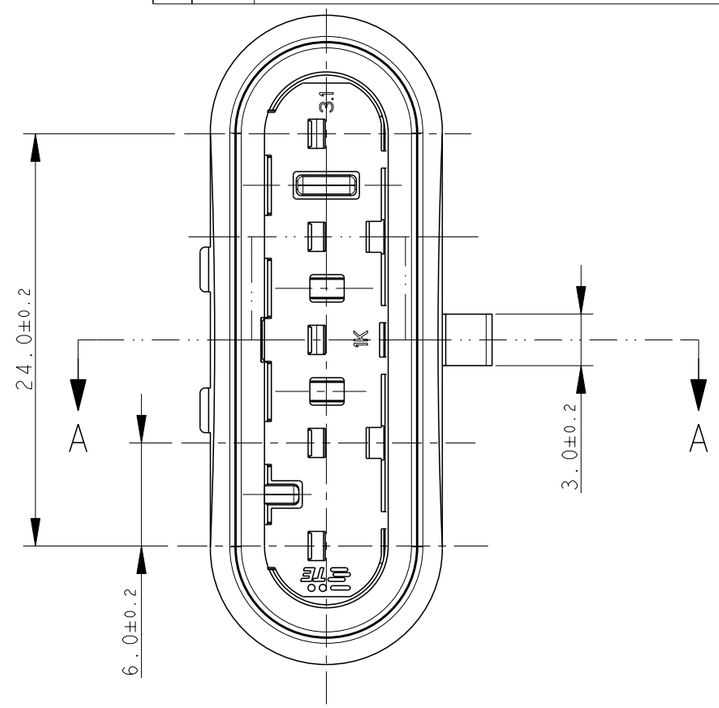


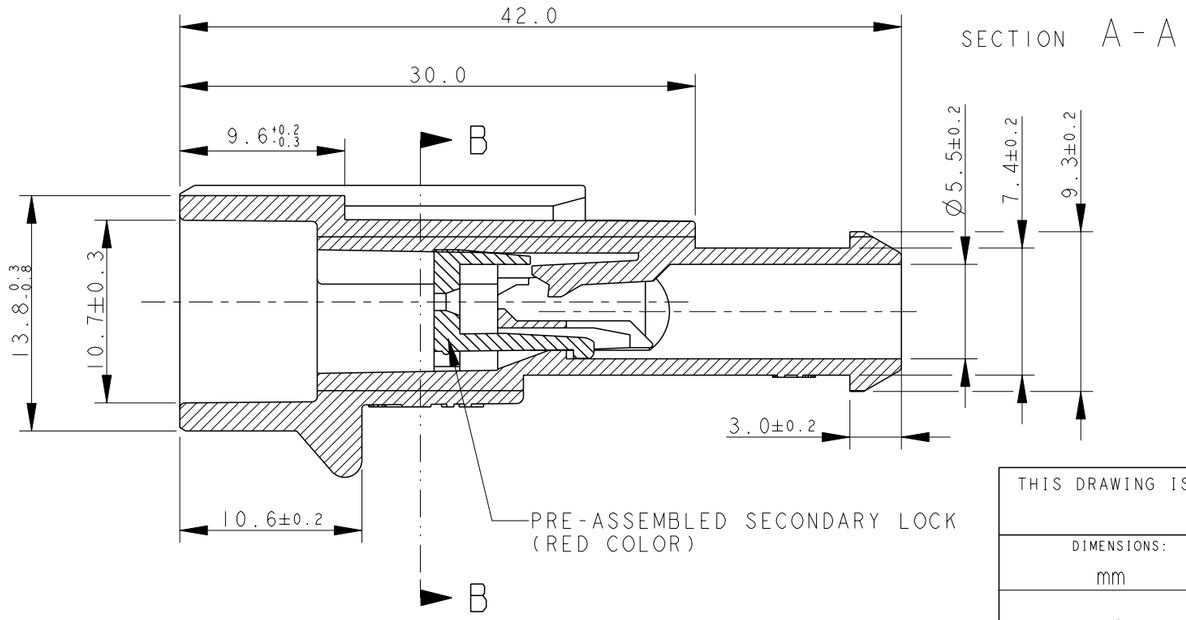


SECTION A-A

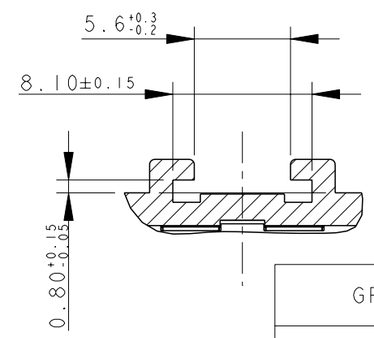


PART.SECTION B-B

| FINISH/COLOR | MATERIAL | REV | PART NUMBER |
|---|---|---|---|
| GRAY | PA66-GF | B | 282107-2 |
| BLACK | PA66-GF | B | 282107-1 |

1 TE CONNECTIVITY TRADE MARK,
(IN ALTERNATIVE: "AMP" LOGO, OR "Tyco Electronics" LOGO)

THIS DRAWING IS A CONTROLLED DOCUMENT.

DIMENSIONS: mm

TOLERANCES UNLESS OTHERWISE SPECIFIED:
0 PLC ±-
1 PLC ± 0.3
2 PLC ±-
3 PLC ±-
4 PLC ±-
ANGLES ± 2°

MATERIAL - SEE TABLE

FINISH - SEE TABLE

DWN C. BERTINI 02-1990
CHK A.BRUNI 02-1990
APVD - -
PRODUCT SPEC 108-20090
APPLICATION SPEC 412-20000
WEIGHT 7.72g

CUSTOMER DRAWING

TE Connectivity

NAME AMP SUPERSEAL 1.5 SRS.
5 POSITIONS TAB ASS'Y
-

| SIZE | CAGE CODE | DRAWING NO | RESTRICTED TO |
|---|---|---|---|
| A3 | 00779 | C-282107 | - |

SCALE . SHEET 1 OF 1 REV B1

1470-19 (3/13)