THIS DRAWING IS UNPUBLISHED. RELEASED FOR PUBLICATION 20
© COPYRIGHT 20 BY - ALL RIGHTS RESERVED.

REVISIONS

P	LTR	DESCRIPTION	DATE	DWN	APVD
	A	INITIAL RELEASE	02MAR2017	N.P	X.X
	A1	ECR-17-013979	25OCT2017	BP	CW

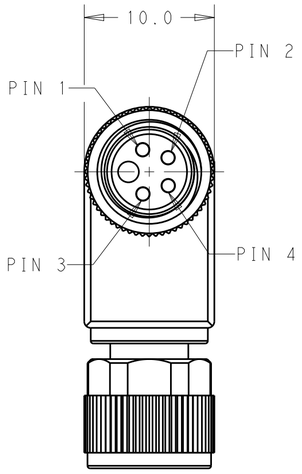

VIEW A
4POS.T1

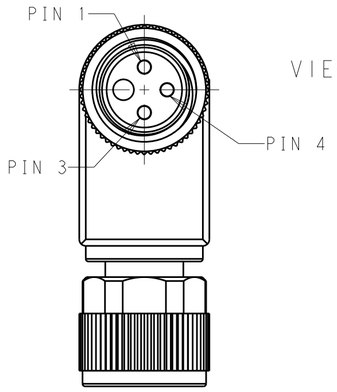

VIEW A
3POS.T1

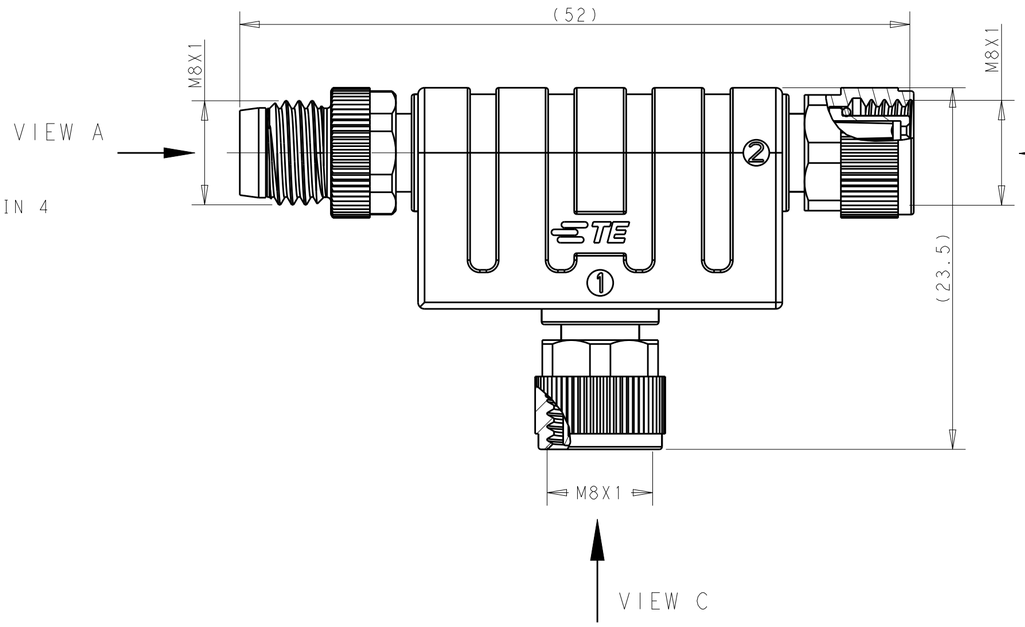

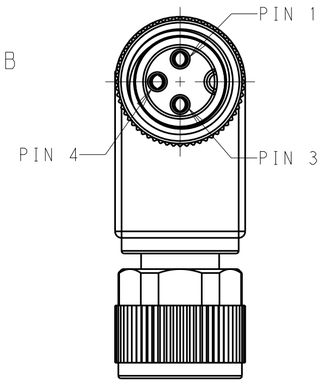

VIEW B
3POS.T1

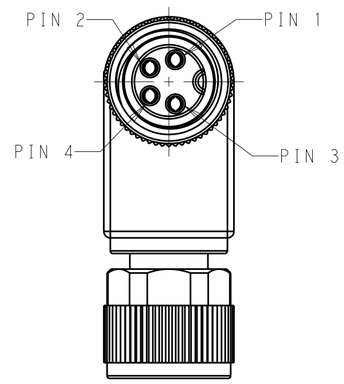

VIEW B
4POS.T1

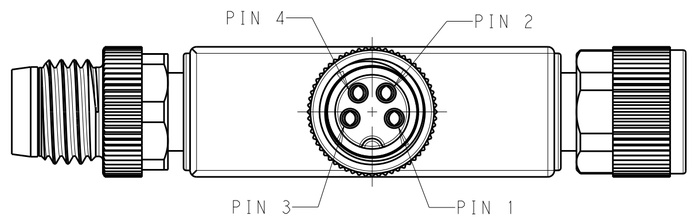

VIEW C
4POS.T1

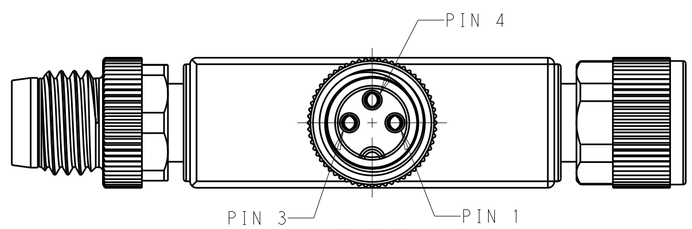

VIEW C
3POS.T1

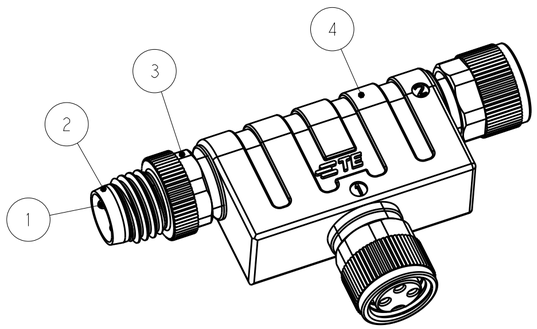

M8 T1 3POS. CONNECTOR

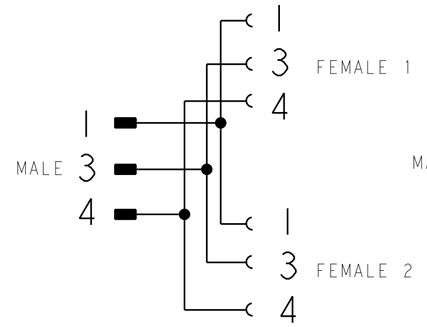

M8 T1 3PIN WIRING

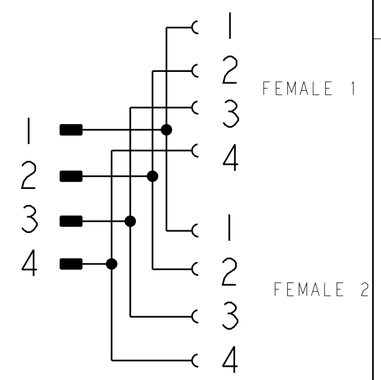

M8 T1 4PIN WIRING

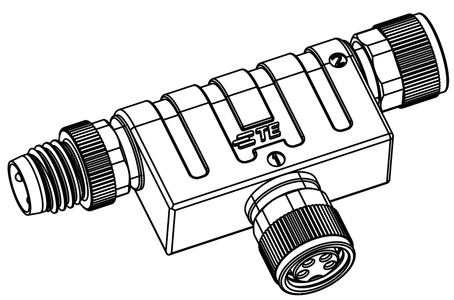

M8 T1 4POS. CONNECTOR

NOTES:

1. TECHNICAL DATA: SEE TABLE 1
2. CONNECTION REFER TO CIRCUIT DIAGRAM;
3. RECOMMENDED TORQUE 0.4NM.

备注:

1. 技术参数见表1;
2. 产品连接参考电路图;
3. 推荐扭矩0.4NM.

ITEM	DESCRIPTION	REMARK
4	OVER-MOLDING	POLYURETHANE
3	NUT	COPPER ALLOY
2	HOUSING	PA66
1	CONTACT	COPPER ALLOY

REMARK	DESCRIPTION	PART NUMBER
M8 T1型4针转接头	4POS.DISTRIBUTOR	T4082102004-000
M8 T1型3针转接头	3POS.DISTRIBUTOR	T4082102003-000

TABLE1

TECHNICAL DATA	T4082102003-000	T4082102004-000
RATED VOLTAGE	60V	30V
RATED CURRENT	3A	
POLLUTION DEGREE	3	
MATERIAL CROUP	II	
OPERATION TEMPERATURE	-25°C~85°C	

THIS DRAWING IS A CONTROLLED DOCUMENT.

DIMENSIONS: mm

TOLERANCES UNLESS OTHERWISE SPECIFIED:
0 PLC ±-
1 PLC ±0.25
2 PLC ±0.15
3 PLC ±
4 PLC ±
ANGLES ±-

MATERIAL: TBD material_2
FINISH: - finish_spec_2

DWN Nick Pan 15FEB2017
CHK Chris Wang 15FEB2017
APVD Xiang Xu 15FEB2017
PRODUCT SPEC -
APPLICATION SPEC -
WEIGHT -

TE Connectivity

NAME M8 T DISTRIBUTOR -

SIZE A2 | CAGE CODE - | DRAWING NO ©-T408210200X000 | RESTRICTED TO -

CUSTOMER DRAWING | SCALE 2:1 | SHEET 1 OF 1 | REV A1

1471-9 (3/13)