DIRFRD006

REVISION RECORD				
REV	ECO	DESCRIPTION	DRFT	CHKD
1		ADD DIM	MANLY 06/24/06'	

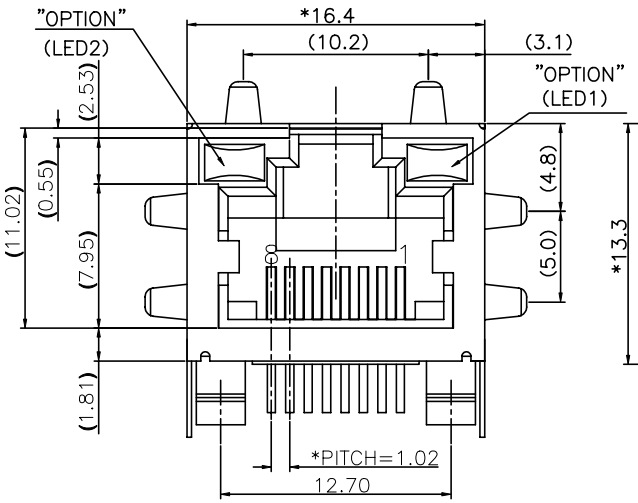

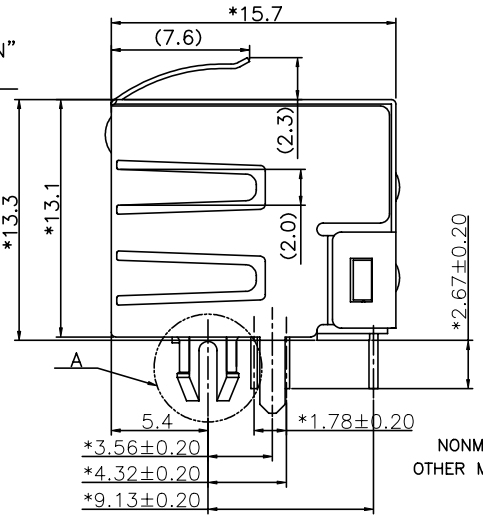

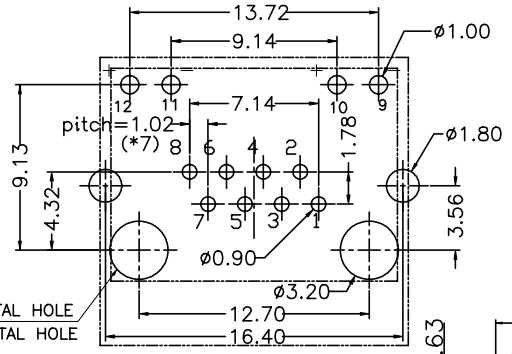

PC Board Layout(t=1.60mm)
Component Side Shown

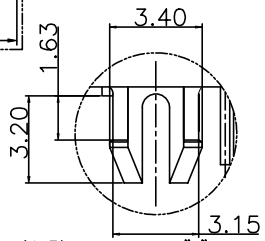

DETAIL "A"
SCALE 1.5:1

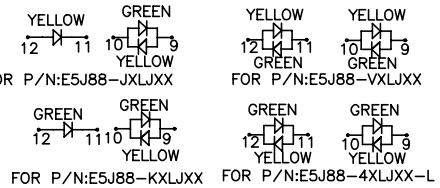

NOTES:

ELECTRICAL:
1. VOLTAGE RATING : 125 VAC RMS.
2. CURRENT RATING : 1.5 AMP.
3. CONTACT RESISTANCE : 30 MILLIOHMS MAX.
4. INSULATION RESISTANCE: 1000 MEGOHMS MIN @ 500 VDC.
5. DIELECTRIC STRENGTH : 1000 VAC RMS 60Hz, 1MIN.
6. LED RATINGS: FORWARD VOLTAGE: 2.2 VOLTS TYPICAL.
   REVERSE VOLTAGE: 5 VOLTS MINIMUM.
7. OPERATING: 750 CYCLES MIN.

MECHANICAL:
1. HOUSING MATERIAL : FR52 UL94-0
2. INSERT MATERIAL : FR52 UL94V-0
3. BACK PLATE MATERIAL : 3.2*2.0*7.0*P=2.54mm.
4. LED SIZE : FR52 UL94V-0.
5. SHIELD MATERIAL : GOLD PLATING OVER NICKEL.
6. CONTACT MATERIAL : COPPER ALLOY 0.25mm THICKNESS PLATING NI.
7. PLATING : PHOSPHOR BRONZE 0.35mm THICKNESS OR ø0.46.
8. PCB RETENTION PRE-SOLDER : 1 LB MIN.
9. PCB RETENTION POST-SOLDER: 10 LBS MIN.

ENVIRONMENTAL:
1. STORAGE : -40°C TO +85°C.
2. OPERATION: -40°C TO +85°C.
3. WAVE SOLDERING TEMPERRATURE: 225~265° (5~10 SECONDS)

MATES WITH MODULAR PLUG CONFORMING TO
FCC PART 68, SUBPART F.
CUL FILE No:E163191

PART NUMBER: E 5J 8 8 - X X L J X X-L

1-LED1:GREEN ,LED2:YELLOW
2-LED1:GREEN ,LED2:GREEN
3-LED1:YELLOW ,LED2:GREEN
4-LED1:G+Y ,LED2:G+Y
5-LED1:RED ,LED2:GREEN
7-LED1:YELLOW ,LED2:YELLOW
J-LED1: G+Y ,LED2:YELLOW
E-LED1:GREEN ,LED2:RED
K-LED1:G+Y ,LED2:GREEN
V-LED1:Y+G ,LED2:Y+G

1-NO TAB
2-TOP TABS
3-SIDE TABS
4-TOP TABS & SIDE TABS

PLATING:1-3u" 2-6u"
3-15u" 4-30u" 5-50u"

1-Plate Tin shield stamp pin,led long 7.0mm
2-Plate Ni shield stamp pin,led long 7.0mm
3-Plate Tin shield round pin,led long 7.0mm
4-Plate Ni shield round pin,led long 7.0mm

J-W/O LOGO FR52

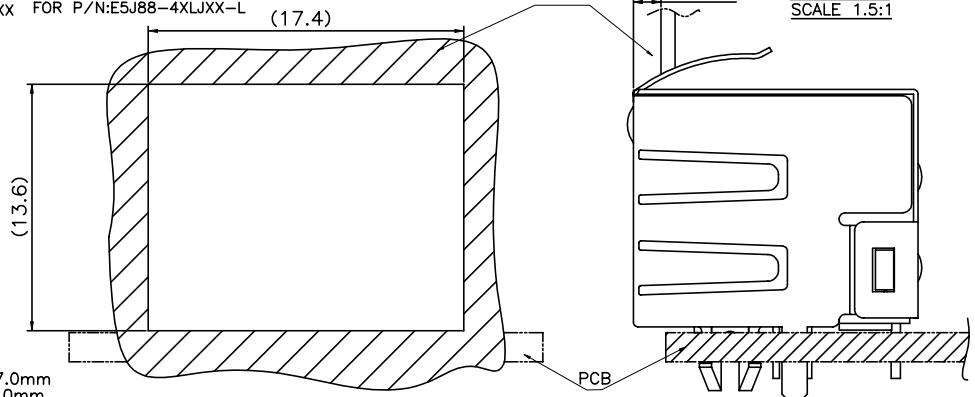

RECOMMENDED PANEL CUTOUT(W/O TABS)

MM (INCH)	DFTO PETERS	DATE 03/19/'05	FULL RISE ELECTRONIC CO., LTD
TOLERANCES EXCEPT AS NOTED	CHKD	DATE	
MM .0 ± 0.20 ± .00 ± 0.15 ± .000 ± 0.075 ±	MFO	DATE	TITLE RJ45 SIDE ENTRY LED JACK
	APPVL oscar	DATE 12/07/06'	
ANGLES ±	MATERIAL :		DRAWING NO. GE5J3015-LA / PART NO. SEE NOTE — SIZE A3 — REV 1 03/0905'
THIRD ANGLE PROJECTION	QT'Y :		
	FINISH :		
	SCALE : 3:1		DO NOT SCALE DRAWING — SHEET 1 OF 1

DETACHED LISTS