THIS DRAWING IS UNPUBLISHED. RELEASED FOR PUBLICATION 534998 ,534998
© COPYRIGHT 534998By – ALL RIGHTS RESERVED.

LOC	DIST
AD	00

REVISIONS

P	LTR	DESCRIPTION	DATE	DWN	APVD
	P7	REVISED PER ECO-13-005565	02APR13	KH	JO

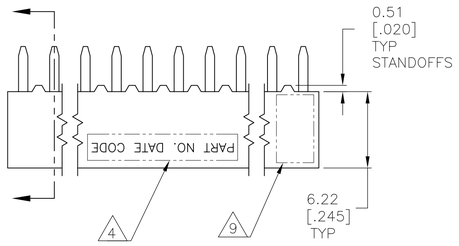

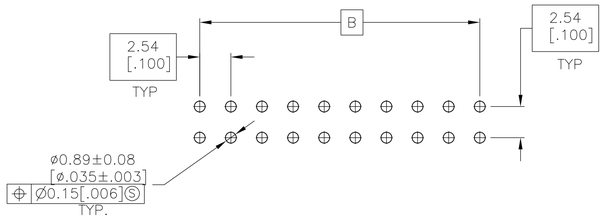

RECOMMENDED PC BOARD HOLE PATTERN
PC BOARD THICKNESS 1.57[.062]

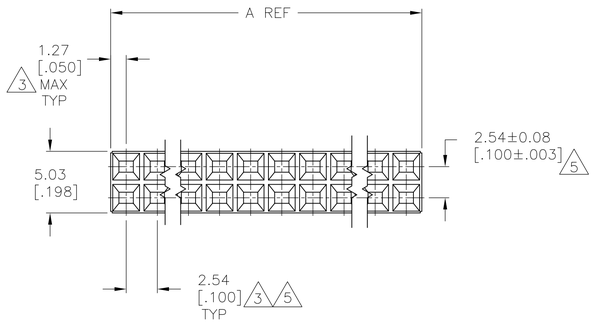

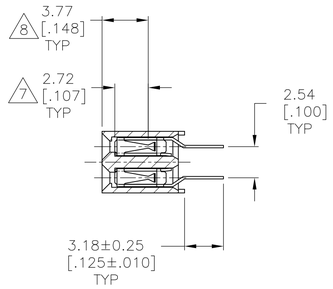

SEE SHEET 2
FOR P/N'S –51 THRU –90

	A	B	NO OF POSN	PART NUMBER
2	88.90 [3.500]	91.44 [3.600]	72	3-534998-6
2	86.36 [3.400]	88.90 [3.500]	70	3-534998-5
2 SUPERCEDED BY 8-534998-4	83.82 [3.300]	86.36 [3.400]	68	3-534998-4
2	81.28 [3.200]	83.82 [3.300]	66	3-534998-3
2	78.74 [3.100]	81.28 [3.200]	64	3-534998-2
2	76.20 [3.000]	78.74 [3.100]	62	3-534998-1
2	73.66 [2.900]	76.20 [3.000]	60	3-534998-0
2	71.12 [2.800]	73.66 [2.900]	58	2-534998-9
2	68.58 [2.700]	71.12 [2.800]	56	2-534998-8
2	66.04 [2.600]	68.58 [2.700]	54	2-534998-7
2 SUPERCEDED BY 7-534998-6	63.50 [2.500]	66.04 [2.600]	52	2-534998-6
2	60.96 [2.400]	63.50 [2.500]	50	2-534998-5
2	58.42 [2.300]	60.96 [2.400]	48	2-534998-4
2	55.88 [2.200]	58.42 [2.300]	46	2-534998-3
2	53.34 [2.100]	55.88 [2.200]	44	2-534998-2
2	50.80 [2.000]	53.34 [2.100]	42	2-534998-1
2	48.26 [1.900]	50.80 [2.000]	40	2-534998-0
2	45.72 [1.800]	48.26 [1.900]	38	1-534998-9
2	43.18 [1.700]	45.72 [1.800]	36	1-534998-8
2	40.64 [1.600]	43.18 [1.700]	34	1-534998-7
2	38.10 [1.500]	40.64 [1.600]	32	1-534998-6
2	35.56 [1.400]	38.10 [1.500]	30	1-534998-5
2	33.02 [1.300]	35.56 [1.400]	28	1-534998-4
2	30.48 [1.200]	33.02 [1.300]	26	1-534998-3
2	27.94 [1.100]	30.48 [1.200]	24	1-534998-2
2	25.40 [1.000]	27.94 [1.100]	22	1-534998-1
2	22.86 [.900]	25.40 [1.000]	20	1-534998-0
2	20.32 [.800]	22.86 [.900]	18	534998-9
2	17.78 [.700]	20.32 [.800]	16	534998-8
2	15.24 [.600]	17.78 [.700]	14	534998-7
2	12.70 [.500]	15.24 [.600]	12	534998-6
2 10	10.16 [.400]	12.70 [.500]	10	534998-5
2 10	7.62 [.300]	10.16 [.400]	8	534998-4
2 10	5.08 [.200]	7.62 [.300]	6	534998-3
2 10	2.54 [.100]	5.08 [.200]	4	534998-2
2 10	–	2.54 [.100]	2	6 534998-1

	B	A	NO OF POSN	PART NUMBER
2 SUPERCEDED BY 9-534998-0	99.06 [3.900]	101.60 [4.000]	80	4-534998-0
2	96.52 [3.800]	99.06 [3.900]	78	3-534998-9
2	93.98 [3.700]	96.52 [3.800]	76	3-534998-8
2	91.44 [3.600]	93.98 [3.700]	74	3-534998-7

1. HOUSING: FLAME RETARDANT, GLASS FILLED, THERMOPLASTIC, COLOR: BLACK.
   CONTACT: PHOSPHOR BRONZE
2. CONTACT: DUPLEX PLATED 0.76µm[.000030] GOLD IN CONTACT AREA, 3.81–7.62µm[.000150–.000300] BRIGHT TIN–LEAD ON LEADS, ALL OVER 1.27µm[.000050] NICKEL
3. THESE DIMENSIONS PERTAIN TO CAVITIY CENTERLINES ONLY – NOT TO CONTACT LOCATIONS
4. PART NUMBER AND DATE CODE ARE MARKED IN APPROXIMATE LOCATION SHOWN,EITHER SIDE.
5. TOLERANCE IS NON–CUMULATIVE.
6. 2 POSITION DATE CODE IS MARKED OPPOSITE SIDE OF TE CONNECTIVITY LOGO.
7. POINT–OF–MEASUREMENT DIMENSION FOR PLATING THICKNESS (INSIDE CONTACT BEAM).
8. POINT–OF–CONTACT DIMENSION.
9. TE CONNECTIVITY TRADEMARK AND CSA LOGO ARE MOLDED INTO HOUSING, THIS LOCATION.
10. NO PART NUMBER MARKING REQUIRED FOR THIS PART.
11. CONTACT: DUPLEX PLATED 0.76µm[.000030] GOLD IN CONTACT AREA, 3.81–7.62µm[.000150–.000300] MATTE TIN ON LEADS, ALL OVER 1.27µm[.000050] NICKEL
12. ROHS 2002/95/EC COMPLIANT

THIS DRAWING IS A CONTROLLED DOCUMENT.

DIMENSIONS: mm [INCHES]

TOLERANCES UNLESS OTHERWISE SPECIFIED:
0 PLC ± –
1 PLC ± –
2 PLC ± 0.13[.005]
3 PLC ± –
4 PLC ± –
ANGLES ± –

MATERIAL 1
FINISH 2

DWN	M.BINNER	06NOV02
CHK	J.OLSON	06NOV02
APVD	J.OLSON	06NOV02

PRODUCT SPEC 108–25022
APPLICATION SPEC 114–25018
WEIGHT –

TE Connectivity

NAME: RECEPTACLE ASSEMBLY, MOD IV, DOUBLE ROW, DUAL ENTRY, .100X.100CL, VERTICAL MOUNT, AMPMODU

SIZE	CAGE CODE	DRAWING NO	RESTRICTED TO
A1	00779	C-534998	–

CUSTOMER DRAWING | SCALE 4:1 | SHEET 1 OF 2 | REV P7

THIS DRAWING IS UNPUBLISHED. RELEASED FOR PUBLICATION 534998 ,534998
© COPYRIGHT 534998By – ALL RIGHTS RESERVED.

LOC	DIST
AD	00

REVISIONS

P	LTR	DESCRIPTION	DATE	DWN	APVD
	–	SEE SHEET 1	–	–	–

12 11	88.90 [3.500]	91.44 [3.600]	72	8–534998–6
12 11	86.36 [3.400]	88.90 [3.500]	70	8–534998–5
12 11	83.82 [3.300]	86.36 [3.400]	68	8–534998–4
12 11	81.28 [3.200]	83.82 [3.300]	66	8–534998–3
12 11	78.74 [3.100]	81.28 [3.200]	64	8–534998–2
12 11	76.20 [3.000]	78.74 [3.100]	62	8–534998–1
12 11	73.66 [2.900]	76.20 [3.000]	60	8–534998–0
12 11	71.12 [2.800]	73.66 [2.900]	58	7–534998–9
12 11	68.58 [2.700]	71.12 [2.800]	56	7–534998–8
12 11	66.04 [2.600]	68.58 [2.700]	54	7–534998–7
12 11	63.50 [2.500]	66.04 [2.600]	52	7–534998–6
12 11	60.96 [2.400]	63.50 [2.500]	50	7–534998–5
12 11	58.42 [2.300]	60.96 [2.400]	48	7–534998–4
12 11	55.88 [2.200]	58.42 [2.300]	46	7–534998–3
12 11	53.34 [2.100]	55.88 [2.200]	44	7–534998–2
12 11	50.80 [2.000]	53.34 [2.100]	42	7–534998–1
12 11	48.26 [1.900]	50.80 [2.000]	40	7–534998–0
12 11	45.72 [1.800]	48.26 [1.900]	38	6–534998–9
12 11	43.18 [1.700]	45.72 [1.800]	36	6–534998–8
12 11	40.64 [1.600]	43.18 [1.700]	34	6–534998–7
12 11	38.10 [1.500]	40.64 [1.600]	32	6–534998–6
12 11	35.56 [1.400]	38.10 [1.500]	30	6–534998–5
12 11	33.02 [1.300]	35.56 [1.400]	28	6–534998–4
12 11	30.48 [1.200]	33.02 [1.300]	26	6–534998–3
12 11	27.94 [1.100]	30.48 [1.200]	24	6–534998–2
12 11	25.40 [1.000]	27.94 [1.100]	22	6–534998–1
12 11	22.86 [.900]	25.40 [1.000]	20	6–534998–0
12 11	20.32 [.800]	22.86 [.900]	18	5–534998–9
12 11	17.78 [.700]	20.32 [.800]	16	5–534998–8
12 11	15.24 [.600]	17.78 [.700]	14	5–534998–7
12 11	12.70 [.500]	15.24 [.600]	12	5–534998–6
12 11 10	10.16 [.400]	12.70 [.500]	10	5–534998–5
12 11 10	7.62 [.300]	10.16 [.400]	8	5–534998–4
12 11 10	5.08 [.200]	7.62 [.300]	6	5–534998–3
12 11 10	2.54 [.100]	5.08 [.200]	4	5–534998–2
12 11 10	–	2.54 [.100]	2	6 5–534998–1
	B	A	NO OF POSN	PART NUMBER

12 11	99.06 [3.900]	101.60 [4.000]	80	9–534998–0
12 11	96.52 [3.800]	99.06 [3.900]	78	8–534998–9
12 11	93.98 [3.700]	96.52 [3.800]	76	8–534998–8
12 11	91.44 [3.600]	93.98 [3.700]	74	8–534998–7
	B	A	NO OF POSN	PART NUMBER

THIS DRAWING IS A CONTROLLED DOCUMENT.

DIMENSIONS: mm [INCHES]

TOLERANCES, UNLESS OTHERWISE SPECIFIED:
0 PLC ± –
1 PLC ± –
2 PLC ± 0.13[.005]
3 PLC ± –
4 PLC ± –
ANGLES ± –

MATERIAL 1

FINISH 2

DWN	M.BINNER	06NOV02
CHK	J.OLSON	06NOV02
APVD	J.OLSON	06NOV02

PRODUCT SPEC 108–25022

APPLICATION SPEC 114–25018

WEIGHT –

TE Connectivity

NAME RECEPTACLE ASSEMBLY, MOD IV, DOUBLE ROW, DUAL ENTRY, .100X.100CL, VERTICAL MOUNT, AMPMODU

SIZE	CAGE CODE	DRAWING NO	RESTRICTED TO
A1	00779	C–534998	–

CUSTOMER DRAWING

SCALE	SHEET	REV
4:1	2 OF 2	P7