PART NUMBER	ITEM ① BODY	ITEM ② CONTACT	ITEM ③ INSULATOR	ITEM ④ MMCX C' SPRING	ITEM ⑤ COUPLING NUT	ITEM ⑥ COUPLING NUT SPRING
134-1019-161	BRASS GOLD PL .00001 MIN OVER NICKEL PL .00005 MIN OVER COPPER PL .00005 MIN	BERYLLIUM COPPER GOLD PL .00003 MIN OVER NICKEL PL .00005 MIN OVER COPPER PL .00005 MIN	TEFLON	BERYLLIUM COPPER GOLD PL .00001 MIN OVER NICKEL PL .00005 MIN OVER COPPER PL .00005 MIN	BRASS GOLD PL .00001 MIN OVER NICKEL PL .00005 MIN OVER COPPER PL .00005 MIN	BERYLLIUM COPPER UNPLATED

DRAWING NO.					
C - 134-1019-161/170					
0	REVISIONS				
ENGINEERING RELEASE					
1	9-28-98	R H	I R		ECN 45758

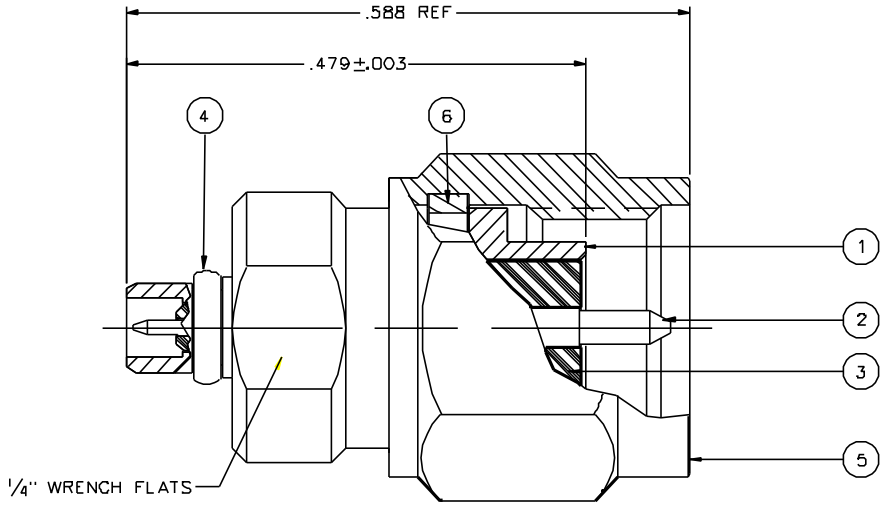

NOTES:

1. SPECIFICATIONS:

IMPEDANCE: 50 OHMS
FREQUENCY RANGE: 0-6 GHz
VSWR: 1.05+.05F MAX (F IN GHz)
WORKING VOLTAGE: 170 VRMS MAX AT SEA LEVEL
DIELECTRIC WITHSTANDING VOLTAGE: 500 VRMS MIN AT SEA LEVEL
INSULATION RESISTANCE: 1000 MEGOHM MIN
CONTACT RESISTANCE:
CENTER CONTACT - INITIAL 5 MILLIOHM MAX, AFTER ENVIRONMENTAL 8 MILLIOHM MAX
OUTER CONDUCTOR - GOLD PLATED INITIAL 1 MILLIOHM MAX, AFTER ENVIRONMENTAL 1.5 MILLIOHM MAX

BRAID TO BODY - NOT APPLICABLE
CORONA LEVEL: 190 VOLTS MINIMUM AT 70,000 FEET
INSERTION LOSS: .1 dB MAX AT 1 GHz
RF LEAKAGE: -60 dB AT 2.5 GHz
RF HIGH POTENTIAL WITHSTANDING VOLTAGE: 400 VRMS AT 4 AND 7 MHZ

MECHANICAL:

ENGAGE/DISENGAGE FORCE (MMCX): 8.0 LBS MAX ENGAGEMENT
1.4 LBS TYPICAL DISENGAGEMENT
ENGAGE/DISENGAGE TORQUE (SMA): 2 IN LBS MAX
MATING TORQUE (SMA): 7-10 IN LBS MAX
CONTACT RETENTION FORCE: 6 LBS MIN
CONTACT RETENTION TORQUE: NOT APPLICABLE
COUPLING NUT RETENTION (SMA): 60 LBS MIN
CABLE ACCEPTABILITY: NOT APPLICABLE
CABLE HEX CRIMP SIZE: NOT APPLICABLE
CABLE RETENTION: NOT APPLICABLE
DURABILITY: 500 CYCLES MIN

ENVIRONMENTAL:

(MEETS OR EXCEEDS THE APPLICABLE PARAGRAPH OF MIL-C-39012)
THERMAL SHOCK: MIL-STD-202, METHOD 107, CONDITION C
OPERATING TEMPERATURE: -55 DEG C TO 155 DEG C
CORROSION: MIL-STD-202, METHOD 101, CONDITION B
SHOCK: MIL-STD-202, METHOD 213, CONDITION B
VIBRATION: MIL-STD-202, METHOD 204, CONDITION D
MOISTURE: MIL-STD-202, METHOD 106

CUSTOMER DRAWING

THIS DRAWING TO BE INTERPRETED PER ANSI Y 14.5M - 1982

"μSTATION"

COMPANY CONFIDENTIAL

TOLERANCE UNLESS OTHERWISE SPECIFIED	DRAWN BY T.A.KARI	DATE 4-14-98	Johnson Components 299 Johnson Ave. P.O. Box 1732 Waseca, MN 56093-0832
DECIMALS .XX ____ .XXX REF ____ mm ____	CHECKED BY	DATE	TITLE SMA PLUG TO MMCX PLUG ADAPTER ASSEMBLY, BETWEEN SERIES
MATL ____	APPROVED BY TAK	DATE 10-6-98	
FINISH ____	APPROVED BY RJB	DATE 10-7-98	CODE NO. / DRAWING NO. C - 134-1019-161/170
	RELEASE DATE		SCALE 10:1 / U/M INCH / SHEET 2 OF 2