MICRO SWITCH
a Honeywell Division
FED. MFG. CODE 91929

SWITCH-ENCLOSED

CATALOG LISTING
BFL1-BL2

NOTES
1 - 3X 6-32 UNC PRESSURE PLATE TERMINAL SCREWS
2 FURNISHED UNASSEMBLED
3 SWITCH WILL OPERATE AND RELEASE WITHIN THIS TRAVEL

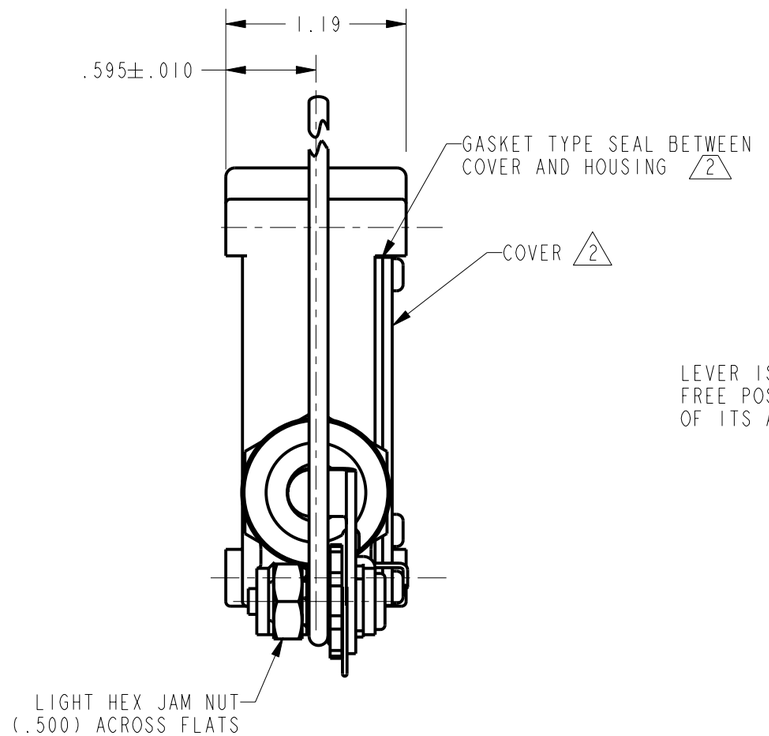

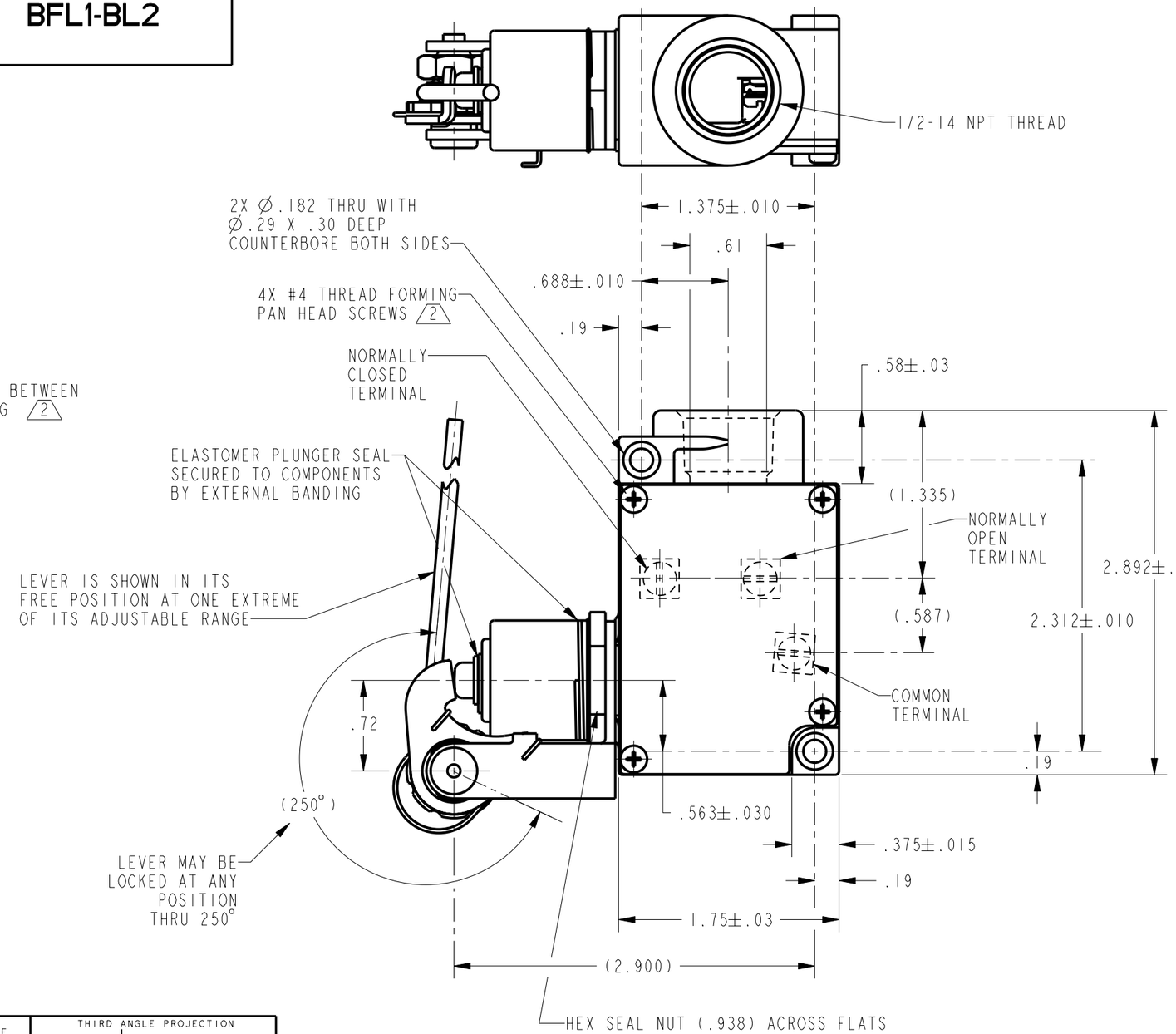

THIS DRAWING COVERS A PROPRIETARY ITEM AND IS THE PROPERTY OF MICRO SWITCH. A DIVISION OF HONEYWELL. THIS DRAWING IS NOT TO BE COPIED OR USED WITHOUT THE APPROVAL OF MICRO SWITCH

THIRD ANGLE PROJECTION

SCALE FULL

DO NOT SCALE PRINT

UNLESS OTHERWISE SPECIFIED TOLERANCES ARE

ONE PLACE	(.0)	±.030
TWO PLACE	(.00)	±.015
THREE PLACE	(.000)	±.005
ANGLES		±

WEIGHT

ANSI Y14.5M-1982 APPLIES

CHARACTERISTICS

OPERATING FORCE ..... 13 OZ MAX
TOTAL TRAVEL 3
DIFFERENTIAL TRAVEL .....

ELECTRICAL DATA

CONTACT ARRANGEMENT
S P D T

L62
15A 125 OR 250 VAC
3/4HP 125 VAC, 1 1/2HP 250 VAC

REVISIONS				
TRF	06SEP01	SAV	06SEP01	1
DRAWN	CHECK	CHECK	CHECK	ISSUE

PTC/CAD 3D

BFL1-BL2

CATALOG LISTING

PAGE 1 OF 1

RELEASE NO. 203802

REPLACES