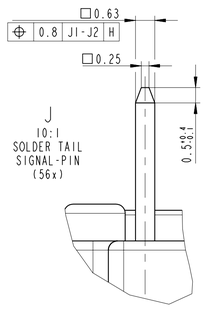

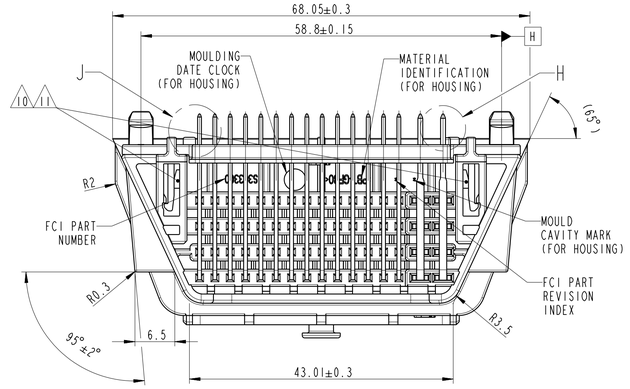

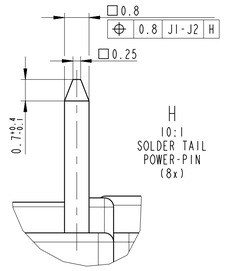

Notes:

1. Interface Sealing area around Ra 1.6 - no flash permitted
2. Material Signal-Pins and Power-Pins: CuZn30
3. Plating Power-Pins:
   pre-plating: 1 - 2.5 µm Ni
   soldering area: 3 - 5 µm Sn (lead-free)
   contact area: 1 - 3 µm Sn (lead-free)
4. Plating Signal-Pins:
   1 - 3 µm Sn (lead-free) over 1 - 2.5 µm Ni
5. Plastic part (housing): PBT GF30, black
   Centering plate (grid): PBT GF30, black
6. Tolerances of form, orientation, location and run-out according to DIN EN ISO 1101, tolerancing according to DIN ISO 8015
7. Part must be free of foreign materials (mould release agents, lubricants) which would inhibit bonding to an adhesive
8. Max. flash 0.2 mm allowed, if not otherwise specified
9. Additional warping allowed in the center: -0.2 mm
10. Detailed design is free to the choice of FCI
11. Feature is specific for part number F015300 only
12. Reference points for part orientation prior to measurement of pins on PCB side (length and true-position)

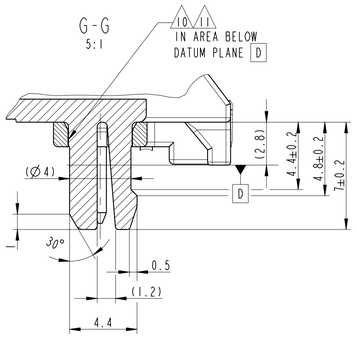

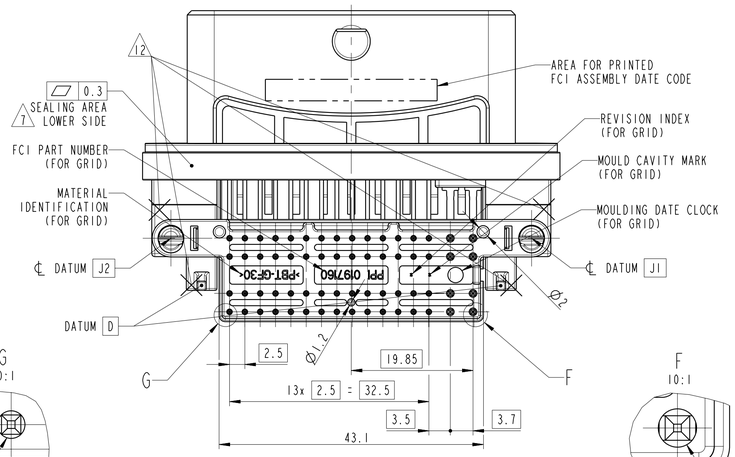

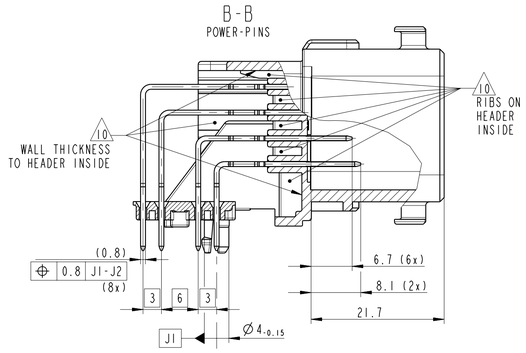

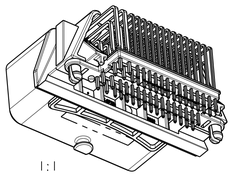

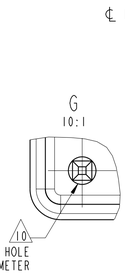

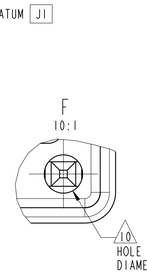

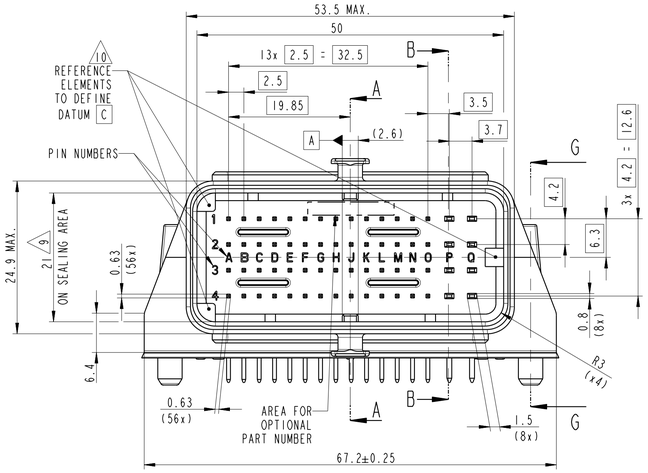

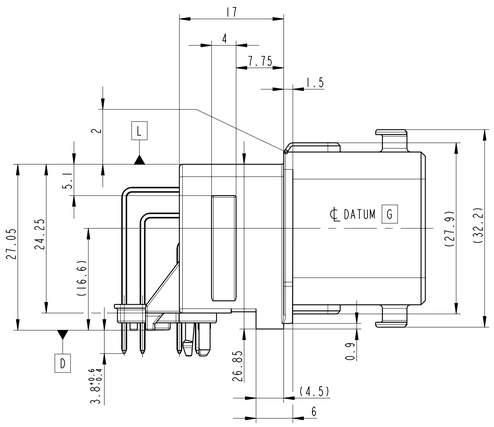

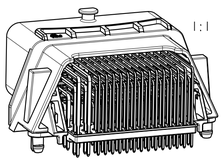

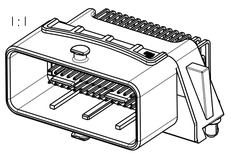

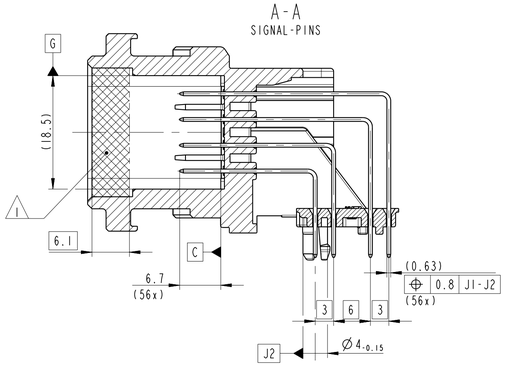

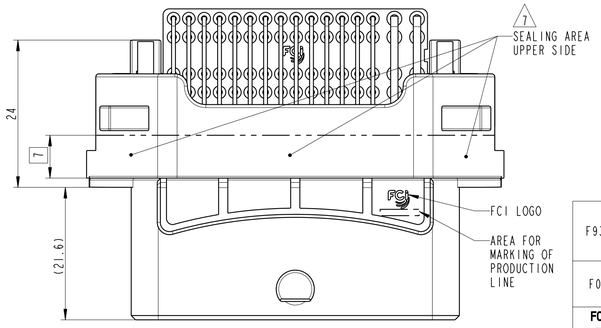

F932300	A	PP10001500 (lever version "left")	1	black (no colour marking on header)	PP10001526 (fits both lever versions "left" and "right")
F015300	A	PP10001501: (lever version "right")			
FCI part number (Header)	FCI part revision index	FCI part number for Female Housing 64w (mating harness connector)	Keying number	Colour marking for Keying	FCI part number for Cover 64w (covers the Female Housing 64w)

ECN-NO. ECN-NUMMER	POSITION POSITION	CHANGE DESCRIPTION ÄNDERUNGSBESCHREIBUNG
955/08	-	INITIAL RELEASE

PRODUCT SPEC. PRODUKT-SPEZ.: 9 901 17 60
PACKAGING SPEC. VERPACKUNGS-SPEZ.: -
APPLICATION SPEC. ANWENDUNGS-SPEZ.: -

This DRAWING AND ALL OTHER INFORMATION CONTAINED THEREIN IS PROPRIETARY AND THE PROPERTY OF FCI. This drawing may not be copied, reproduced or disclosed to any third party without the expressed written permission of FCI. © FCI April 1999

DIESE ZEICHNUNG U. ALLE ENTHALTENEN INFORMATIONEN SIND EIGENTUM VON FCI. Diese Zeichnung darf weder kopiert, noch in irgendeiner Form reproduziert, gespeichert oder Dritten ohne ausdrückliche, schriftliche Genehmigung zugänglich gemacht werden. © FCI April 1999

TOLERANCES TOLERANZEN: ±0.2mm angles ±3°
COUNTERPART No. GEGENSTÜCK-Nr.: -
DO NOT MEASURE DRAWING ZEICHNUNG NICHT VERMESSEN
MATERIAL: MATERIAL: SEE NOTES
COLOUR: FARBE: SEE NOTES
SURFACE FINISH OBERFLÄCHE: SEE NOTES
TOOL NO. WERKZEUG-Nr.: -
ECO LOC. CODE STANDORT. CODE: GN

	DATE DATUM	NAME NAME
CREATED BY ERSTELLT	2008/10/06	Bruno BARTH
MODIFIED BY GEÄNDERT	2008/11/03	Bruno BARTH
CHECKED BY GEPRÜFT	2008/11/03	Cor SCHULZ
APPROVED BY GENEHMIGT	2008/11/03	Claudia SCHULZ

TITLE BEZEICHNUNG: 64-way header
PROJECT PROJEKT: 64-way CMC header Distribution
ESR NO. ECO-NUMMER: EU-075160
CAT. NO. KATALOG-Nr.: -
FILE NAME DOK.-NAME: PCC0596894
DOCUMENT UNDER POS CONTROL DOKUMENT IST IM PDS VERWALTET
NO MODIFICATION ALLOWED OUTSIDE. ÄNDERUNG AUSSERHALB NICHT ERLAUBT

DRAWING NUMBER ZEICHN.-NUMMER: PCC0596894
REV. INDEX: A
STATE STATUS: SERIAL RELEASED
PART NUMBER TEILENUMMER: See Table
REV. INDEX: -

CAD SYSTEM: ISO PROJECTION ISO PROJEKTION; pro / eng.
DIMENSION IN MILLIMETERS DIMENSIONEN IN MILLIMETER
DWG. SIZE FORMAT: A1
APPROVAL LEVEL FREIGABESTUFE: -
SHEET BLATT: 1 of / von 1
SCALE MAS.: 2:1

EUR CD4 1/2 F29 PDS