Description

The M16C/62T group of single-chip microcomputers are built using the high-performance silicon gate CMOS process using a M16C/60 Series CPU core and are packaged in a 100-pin or a 80-pin plastic molded QFP. These single-chip microcomputers operate using sophisticated instructions featuring a high level of instruction efficiency. With 1M bytes of address space, they are capable of executing instructions at high speed. They also feature a built-in multiplier and DMAC, making them ideal for controlling office, communications, industrial equipment, and other high-speed processing applications.
The M16C/62T group includes a wide range of products with different internal memory types and sizes and various package types.

Features

- Memory capacity ..... M30623M4T-XXXGP : ROM 32K bytes, RAM 3K bytes
  M30622M8T/M8V-XXXFP,M30623M8T/M8V-XXXGP : ROM 64K bytes, RAM 4K bytes
  M30622MCT/MCV-XXXFP,M30623MCT/MCV-XXXGP : ROM 128K bytes, RAM 5K bytes
  M30622ECT/ECV-XXXFP,M30623ECT/ECV-XXXGP : PROM 128K bytes, RAM 5K bytes
- Shortest instruction execution time ..... 62.5ns (f(X_{IN})=16MHz, V_{CC}=5V)
- Supply voltage ..... Mask ROM version : 4.2 to 5.5V (f(X_{IN})=16MHz, without software wait)
  One-time PROM version : 4.5 to 5.5V (f(X_{IN})=16MHz, without software wait)
- Low power consumption ..... 140mW (V_{CC} = 5V, f(X_{IN})=16MHz)
- Interrupts 25 internal interrupt sources, 8 external interrupt sources (M30622(100-pin package)) /5 sources (M30623(80-pin package)), 4 software interrupt sources, 7 levels (including key input interrupt)
- Multifunction 16-bit timer ..... 5 I/O timers + 6 input timers(M30622(100-pin package))
  3 I/O timers + 5 input timers(M30623(80-pin package))
- Inside 16-bit timer ..... 3 timers(only M30623(80-pin package))(Note 1)
- Serial I/O ..... • M30622(100-pin package) : 3 for UART or clock synchronous + 2 for synchronous
  • M30623(80-pin package) : 3 for UART or clock synchronous(one of exclusive UART) + 2 for synchronous(one of exclusive transmission)
- DMAC ..... 2 channels (trigger: 24 sources)
- A-D converter ..... 10 bits X 8 channels (Expandable up to 26 channels)
- D-A converter ..... 8 bits X 2 channels
- CRC calculation circuit ..... 1 circuit
- Watchdog timer ..... 1 line
- Programmable I/O ..... 87 lines(M30622(100-pin package)),70 lines(M30623(80-pin package))
- Input port ..... 1 line ($P8_5$ shared with $\overline{NMI}$ pin)
- Memory expansion ..... Available (to 1.2M bytes or 4M bytes)
- Chip select output ..... 4 lines(only M30622(100-pin package))(Note 2)
- Clock generating circuit ..... 2 built-in clock generation circuits (built-in feedback resistor, and external ceramic or quartz oscillator)

Note 1: In M30623(80-pin package), these timers have no corresponding external pin can be used as internal timers.
Note 2: M30623(80-pin package) has no external pin for chip select output.

Applications

Audio, cameras, office equipment, communications equipment, portable equipment, cars, etc

Specifications written in this manual are believed to be accurate, but are not guaranteed to be entirely free of error.
Specifications in this manual may be changed for functional or performance improvements. Please make sure your manual is the latest edition.

------Table of Contents------

Central Processing Unit (CPU) 12
Reset 15
Processor Mode 28
Clock Generating Circuit 40
Protection 49
Interrupts 50
Watchdog Timer 70
DMAC 72
Timer 82
Timers' function for three-phase motor control 100
Serial I/O 112
A-D Converter 146
D-A Converter 157
CRC Calculation Circuit 159
Programmable I/O Ports 161
Electrical characteristics 176

Pin Configuration

Figures 1.1.1 show the pin configurations (top view) of M30622(100-pin package) and 1.1.2 show the pin configurations (top view) of M30623(80-pin package).

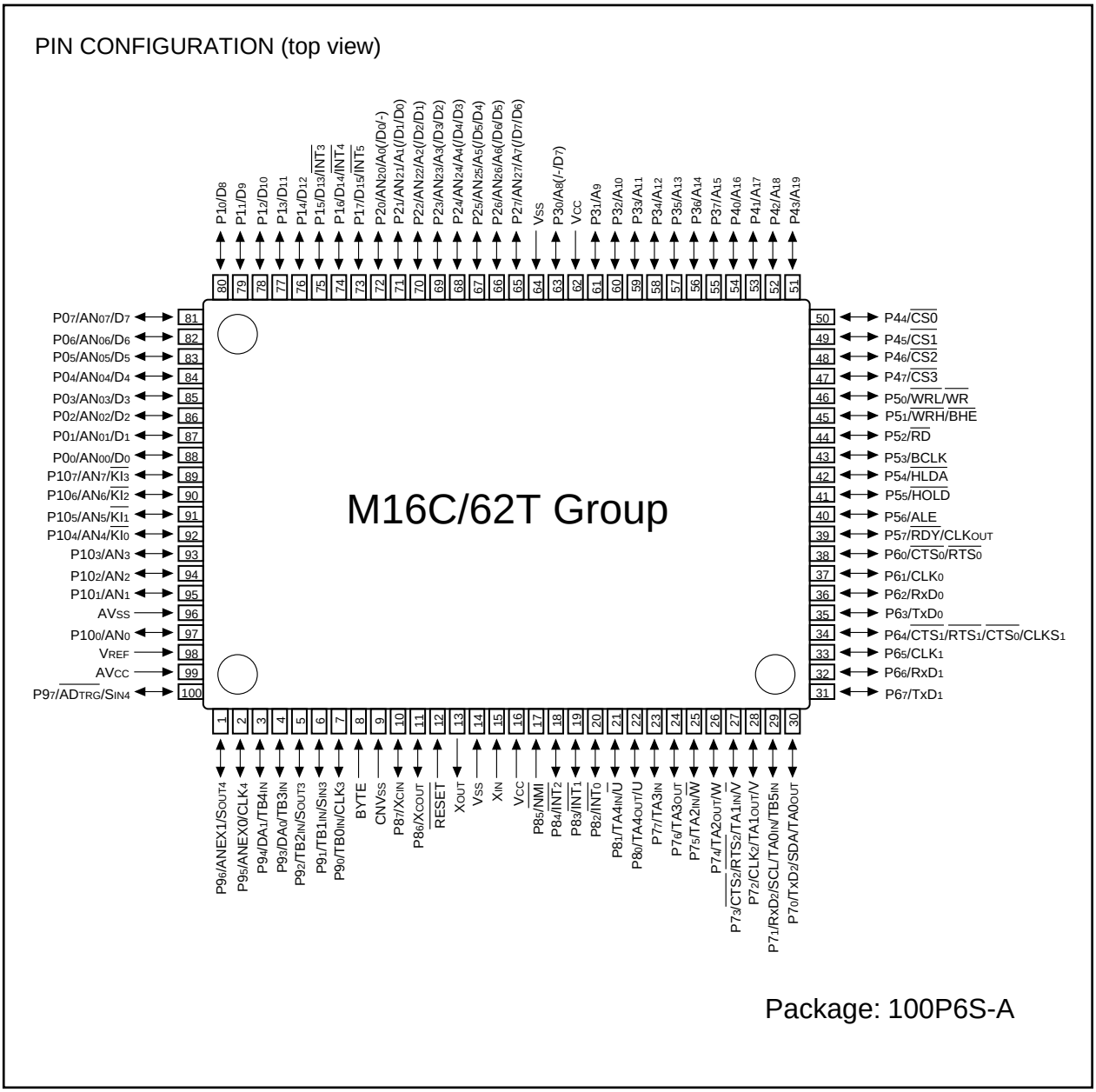

Figure 1.1.1. Pin configuration (top view) of M30622 (100-pin package)

PIN CONFIGURATION (top view)

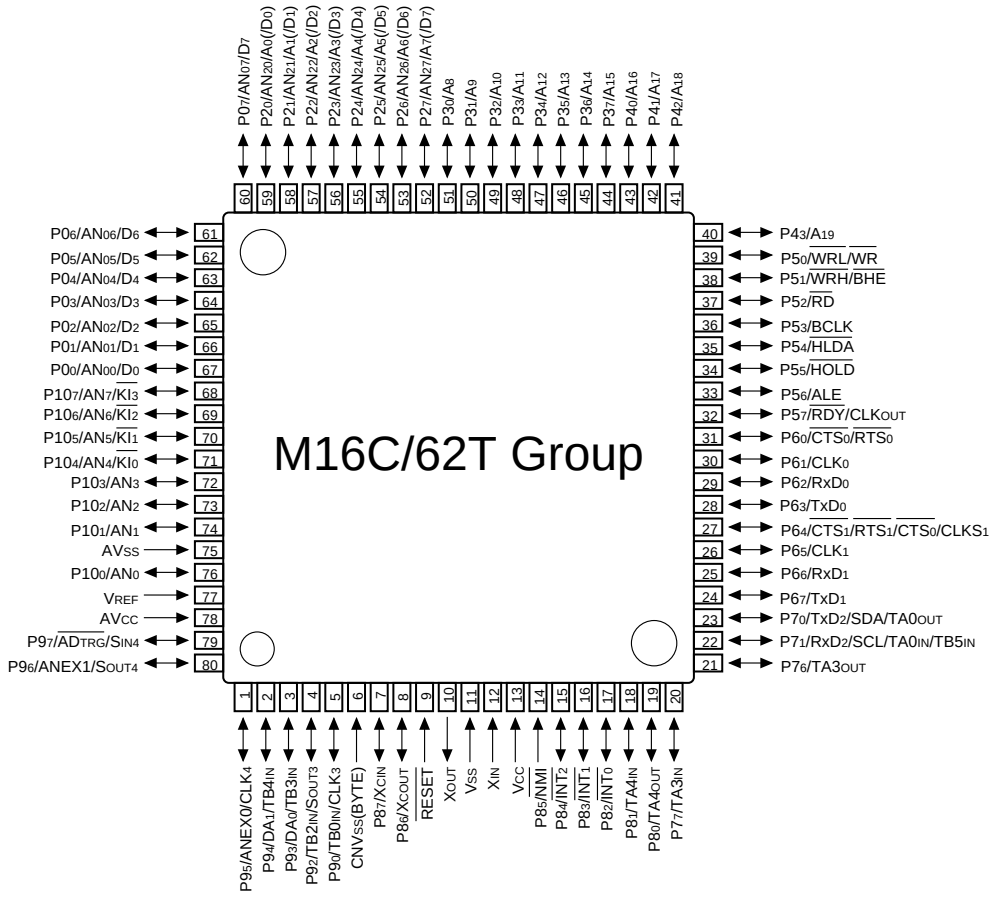

Package: 80P6S-A

Figure 1.1.2. Pin configuration (top view) of M30623 (80-pin package)

Block Diagram

Figure 1.1.3 is block diagrams of M30622(100-pin package) and 1.1.4 is block diagrams of M30623(80-pin package).

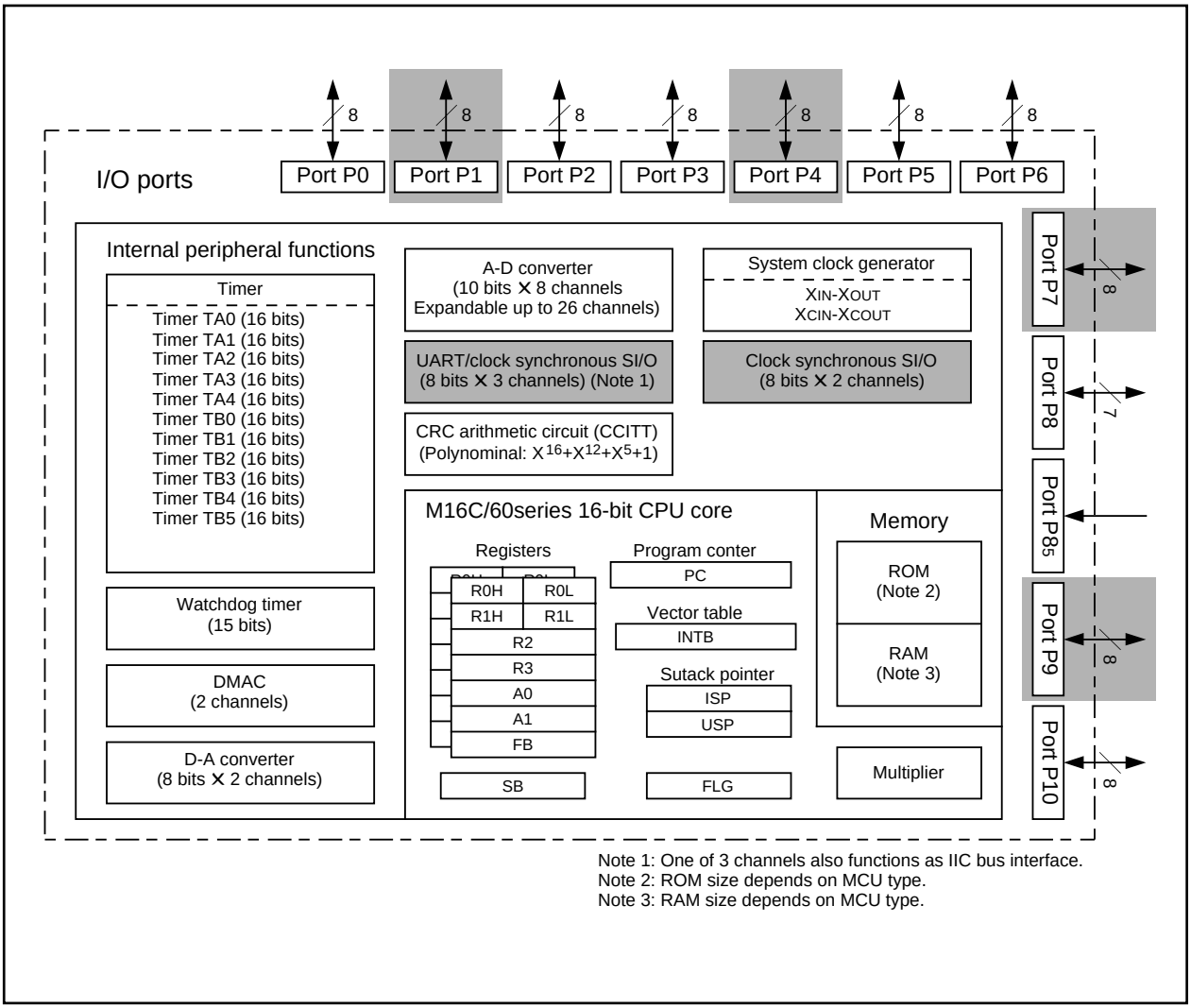

Figure 1.1.3. Block diagram of M30622 (100-pin package)

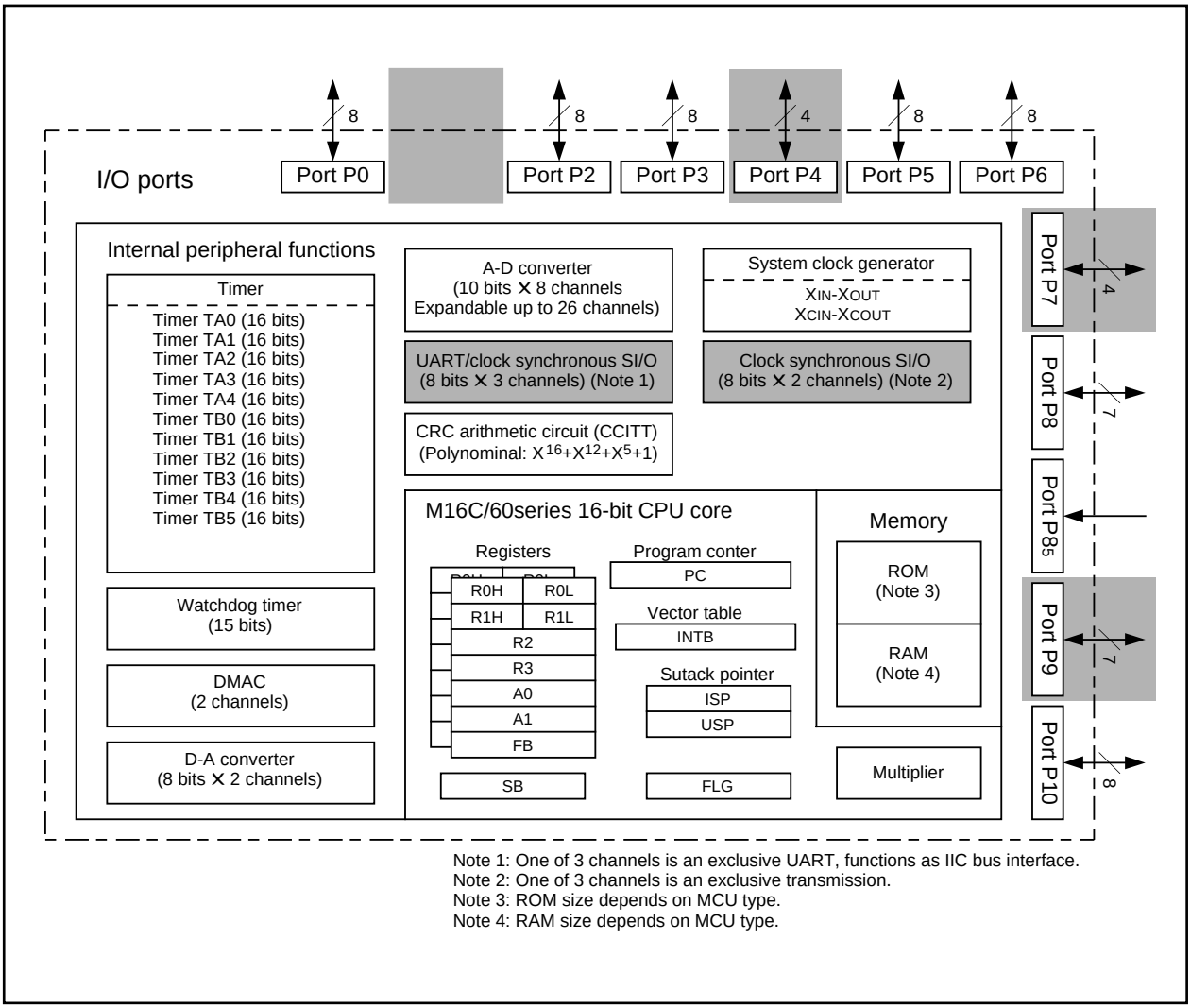

Note 1: One of 3 channels is an exclusive UART, functions as IIC bus interface.
Note 2: One of 3 channels is an exclusive transmission.
Note 3: ROM size depends on MCU type.
Note 4: RAM size depends on MCU type.

Figure 1.1.4. Block diagram of M30623 (80-pin package)

Performance Outline

Table 1.1.1 is a performance outline of M16C/62T group.

Table 1.1.1. Performance outline of M16C/62T group

Item		Performance	
		M30622(100-pin package)	**M30623(80-pin package)**
Number of basic instructions		91 instructions	
Shortest instruction execution time		62.5ns(f(XIN)=16MHz, VCC=5V)	
Memory capacity	ROM	32Kbytes (M30623M4T-XXXGP) 64Kbytes (M30622M8T/M8V-XXXFP, M30623M8T/M8V-XXXGP) 128Kbytes (M30622MCT/MCV-XXXFP, M30623MCT/MCV-XXXGP, M30622ECT/ECV-XXXFP, M30623ECT/ECV-XXXGP)	
	RAM	3Kbytes (M30623M4T-XXXGP) 4Kbytes (M30622M8T/M8V-XXXFP, M30623M8T/M8V-XXXGP) 5Kbytes (M30622MCT/MCV-XXXFP, M30623MCT/MCV-XXXGP, M30622ECT/ECV-XXXFP, M30623ECT/ECV-XXXGP)	
I/O port	P0, P2, P3, P5, P6, P10	8 bits x 6	
	P1	8 bits x 1	–
	P4, P7	8 bits x 2	4 bits x 2
	P8 (except P85)	7 bits x 1	
	P9	8 bits x 1	7 bits x 1
Input port	P85	1 bit x 1	
Multifunction timer	TA0, A3, TA4	16 bits x 3 (cycle timer, external / internal event count, pulse output)	
	TA1, TA2	16 bits x 2 (cycle timer, external / internal event count, pulse output)	16 bits x 2 (cycle timer, internal event count)
	TB0, TB2 to TB5	16 bits x 5 (cycle timer, external / internal event count, pulse period / pulse width measurement)	
	TB1	16 bits x 1 (cycle timer, external / internal event count, pulse period / pulse width measurement)	16 bits x 1 (cycle timer, internal event count)
Serial I/O	UART0, UART1	(UART or clock synchronous) x 2	
	UART2	(UART or clock synchronous) x 1	UART x 1
	SI/O3	(Clock synchronous) x 1	(Clock synchronous) x 1 (exclusive transmission)
	SI/O4	(Clock synchronous) x 1	
A-D converter		10 bits x (8 x 3 + 2) channels	
D-A converter		8 bits x 2 channels	
DMAC		2 channels (trigger: 24 sources)	
CRC calculation circuit		CRC-CCITT	
Watchdog timer		15 bits x 1 (with prescaler)	
Interrupt		25 internal and 8 external sources, 4 software sources, 7 levels	25 internal and 5 external sources, 4 software sources, 7 levels
Clock generating circuit		2 built-in clock generation circuits (built-in feedback resistor, and external ceramic or quartz oscillator)	
Supply voltage		Mask ROM version : 4.2 to 5.5V (f(XIN)=16MHz, without software wait) One-time PROM version : 4.5 to 5.5V (f(XIN)=16MHz, without software wait)	
Power consumption		140mW (VCC=5V, f(XIN) = 16MHz)	
I/O characteristics	I/O withstand voltage	5V	
	Output current	5mA	
Memory expansion		Available (to 1.2M bytes or 4M bytes) (The M16C/62T group is not guaranteed to operate in memory expansion.)	
Operating ambient temperature		85°C guaranteed version : -40°C to 85°C, 125°C guaranteed version : -40°C to 125°C	
Device configuration		CMOS high performance silicon gate	
Package		100-pin plastic mold QFP	80-pin plastic mold QFP

Mitsubishi plans to release the following products in the M16C/62T group:

(1) Support for mask ROM version, one-time PROM version

One-time PROM version has the equally functions mask ROM version, with the exception of built-in electolic-programming-possible PROM.

(2) ROM capacity

(3) Package(number of pin)

100P6S-A : 100-pin plastic molded QFP

80P6S-A : 80-pin plastic molded QFP

(4) Support for 85°C guaranteed version, 125°C guaranteed version

125°C guaranteed version M30622MxV/ECV-XXXFP, M30623MxV/ECV-XXXGP is suported. These are different from 85°C guaranteed version M30622MxT/ECT-XXXFP, M30623MxT/ECT-XXXGP on operating ambient temperature and the terms of the use, and so please inquire.

ROM size	100-pin packaege		80-pin packaege	
128K bytes	M30622MCT-XXXFP M30622MCV-XXXFP	M30622ECT-XXXFP M30622ECTFP* M30622ECV-XXXFP M30622ECVFP*	M30623MCT-XXXGP M30623MCV-XXXGP	M30623ECT-XXXGP M30623ECTGP* M30623ECV-XXXGP M30623ECVGP*
64K bytes	M30622M8T-XXXFP M30622M8V-XXXFP		M30623M8T-XXXGP M30623M8V-XXXGP	
32K bytes			M30623M4T-XXXGP	
	Mask ROM version	One-time PROM version	Mask ROM version	One-time PROM version

* Shipped in blank

Note 1: It may change in the future.
Note 2: Use shipped in blank of one-time PROM version as the trial, development of program.
In case of vehicle-mount test or mass production, use shipped in programming.

Figure 1.1.5. ROM expansion **Now: Mar.1999.**

The M16C/62T group products currently supported are listed in Table 1.1.2.

Table 1.1.2. M16C/62T group **Now: Mar.1999.**

Type No.	ROM capacity	RAM capacity	Characteristic	Package	Remarks
M30622M8T-XXXFP	64K bytes	4K bytes	85 °C guaranteed version	100P6S-A	Mask ROM version
M30622M8V-XXXFP			125 °C guaranteed version (Note 3)		
M30622MCT-XXXFP	128K bytes	5K bytes	85 °C guaranteed version		Mask ROM version
M30622ECT-XXXFP					One-time PROM version (programming)
M30622ECTFP					One-time PROM version (blank)
M30622MCV-XXXFP			125 °C guaranteed version (Note 3)		Mask ROM version
M30622ECV-XXXFP					One-time PROM version (programming)
M30622ECVFP					One-time PROM version (blank)
M30623M4T-XXXGP	32K bytes	3K bytes	85 °C guaranteed version	80P6S-A	Mask ROM version
M30623M8T-XXXGP	64K bytes	4K bytes	85 °C guaranteed version		Mask ROM version
M30623M8V-XXXGP			125 °C guaranteed version (Note 3)		
M30623MCT-XXXGP	128K bytes	5K bytes	85 °C guaranteed version		Mask ROM version
M30623ECT-XXXGP					One-time PROM version (programming)
M30623ECTGP					One-time PROM version (blank)
M30623MCV-XXXGP			125 °C guaranteed version (Note 3)		Mask ROM version
M30623ECV-XXXGP					One-time PROM version (programming)
M30623ECVGP					One-time PROM version (blank)

Note 1: It may change in the future.
Note 2: Use shipped in blank of one-time PROM version as the trial, development of program.
In case of vehicle-mount test or mass production, use shipped in programming.
Note 3: It is different from 85°C guaranteed version on operating ambient temperature and the terms of the use, pleas inquire.

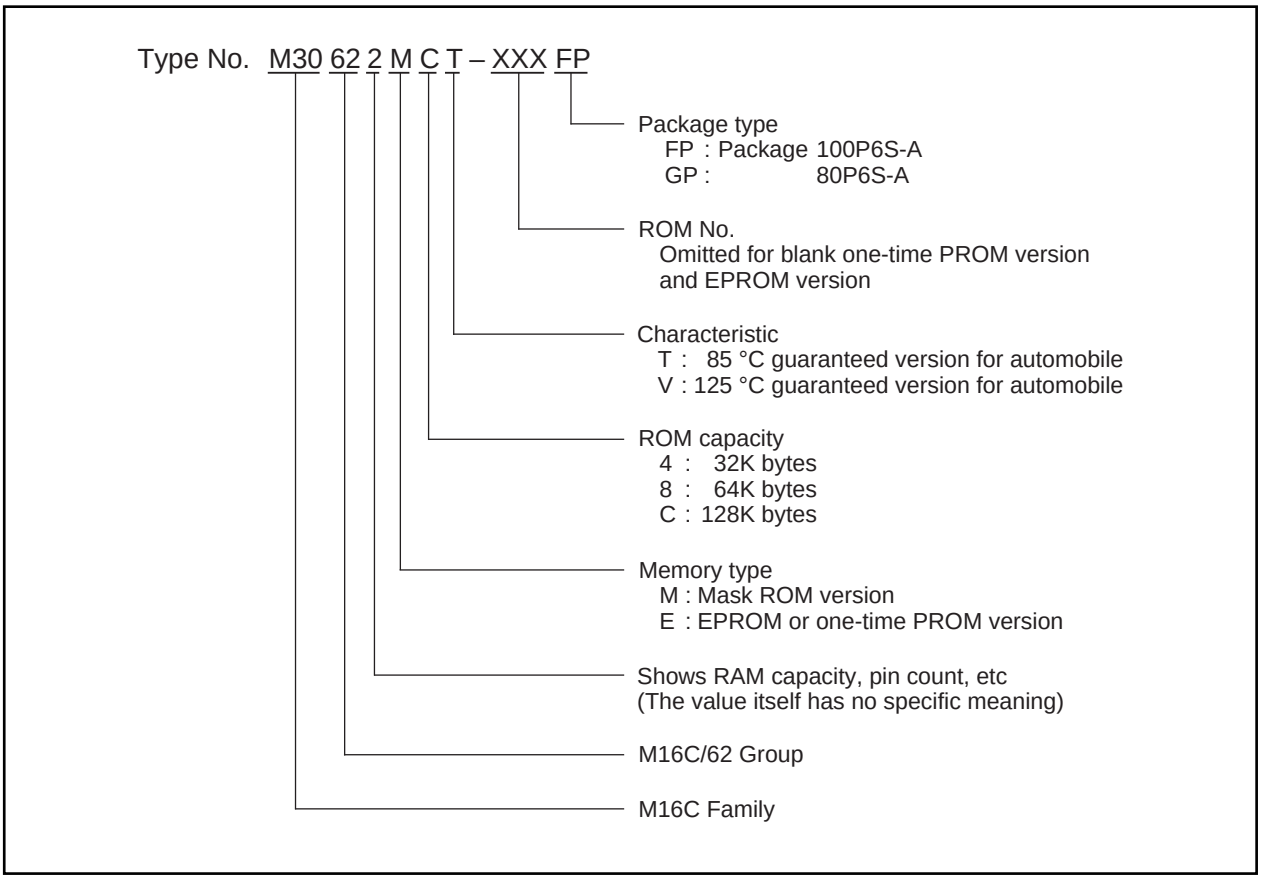

Figure 1.1.6. Type No., memory size, and package

Pin Description

Pin name	Signal name	I/O type	Function
V_{CC}, V_{SS}	Power supply input		Supply 4.2 V to 5.5 V to the V_{CC} pin. Supply 0 V to the V_{SS} pin.
CNV_{SS}	CNV_{SS}	Input	This pin switches between processor modes. Connect it to the V_{SS} pin when operating in single-chip or memory expansion mode. Connect it to the V_{CC} pin when operating in microprocessor mode.
$\overline{RESET}$	Reset input	Input	A “L” on this input resets the microcomputer.
X_{IN} X_{OUT}	Clock input Clock output	Input Output	These pins are provided for the main clock generating circuit. Connect a ceramic resonator or crystal between the X_{IN} and the X_{OUT} pins. To use an externally derived clock, input it to the X_{IN} pin and leave the X_{OUT} pin open.
BYTE	External data bus width select input	Input	This pin selects the width of an external data bus. A 16-bit width is selected when this input is “L”; an 8-bit width is selected when this input is “H”. This input must be fixed to either “H” or “L”. When operating in single-chip mode, connect this pin to V_{SS}. In M30623 (80-pin package), the BYTE signal is internally connected to the CNV_{SS} signal.
AV_{CC}	Analog power supply input		This pin is a power supply input for the A-D converter. Connect this pin to V_{CC}.
AV_{SS}	Analog power supply input		This pin is a power supply input for the A-D converter. Connect this pin to V_{SS}.
V_{REF}	Reference voltage input	Input	This pin is a reference voltage input for the A-D converter.
$P0_0$ to $P0_7$	I/O port P0	Input/output	This is an 8-bit CMOS I/O port. It has an input/output port direction register that allows the user to set each pin for input or output individually. When set for input, the user can specify in units of four bits via software whether or not they are tied to a pull-up resistor. Pins in this port also function as A-D converter extended input pins as selected by software when operating in single-chip mode.
D_0 to D_7		Input/output	When set as a separate bus, these pins input and output data (D_0–D_7).
$P1_0$ to $P1_7$	I/O port P1	Input/output	This is an 8-bit I/O port equivalent to P0. Pins in this port also function as external interrupt pins as selected by software.
D_8 to D_{15}		Input/output	When set as a separate bus, these pins input and output data (D_8–D_{15}).
$P2_0$ to $P2_7$	I/O port P2	Input/output	This is an 8-bit I/O port equivalent to P0. Pins in this port also function as A-D converter extended input pins as selected by software when operating in single-chip mode.
A_0 to A_7		Output	These pins output 8 low-order address bits (A_0–A_7).
A_0/D_0 to A_7/D_7		Input/output	If the external bus is set as an 8-bit wide multiplexed bus, these pins input and output data (D_0–D_7) and output 8 low-order address bits (A_0–A_7) separated in time by multiplexing.
A_0, A_1/D_0 to A_7/D_6		Output Input/output	If the external bus is set as a 16-bit wide multiplexed bus, these pins input and output data (D_0–D_6) and output address (A_1–A_7) separated in time by multiplexing. They also output address (A_0).
$P3_0$ to $P3_7$	I/O port P3	Input/output	This is an 8-bit I/O port equivalent to P0.
A_8 to A_{15}		Output	These pins output 8 middle-order address bits (A_8–A_{15}).
A_8/D_7, A_9 to A_{15}		Input/output	If the external bus is set as a 16-bit wide multiplexed bus, these pins input and output data (D_7) and output address (A_8) separated in time by multiplexing. They also output address (A_9–A_{15}).

Pin Description

Pin name	Signal name	I/O type	Function
$P4_0$ to $P4_7$	I/O port P4	Input/output	This is an 8-bit I/O port equivalent to P0.
$\overline{CS_0}$ to $\overline{CS_3}$, A_{16} to A_{19}		Output Output	These pins output $\overline{CS_0}$–$\overline{CS_3}$ signals and A_{16}–A_{19}. $\overline{CS_0}$–$\overline{CS_3}$ are chip select signals used to specify an access space. A_{16}–A_{19} are 4 high-order address bits.
$P5_0$ to $P5_7$	I/O port P5	Input/output	This is an 8-bit I/O port equivalent to P0. In single-chip mode, $P5_7$ in this port outputs a divide-by-8 or divide-by-32 clock of X_{IN} or a clock of the same frequency as X_{CIN} as selected by software.
$\overline{WRL}$/$\overline{WR}$, $\overline{WRH}$/$\overline{BHE}$, RD, BCLK, $\overline{HLDA}$, $\overline{HOLD}$, ALE, $\overline{RDY}$		Output Output Output Output Output Input Output Input	Output $\overline{WRL}$, $\overline{WRH}$ ($\overline{WR}$ and $\overline{BHE}$), $\overline{RD}$, BCLK, $\overline{HLDA}$, and ALE signals. $\overline{WRL}$ and $\overline{WRH}$, and $\overline{BHE}$ and $\overline{WR}$ can be switched using software control. ■ $\overline{WRL}$, $\overline{WRH}$, and $\overline{RD}$ selected With a 16-bit external data bus, data is written to even addresses when the $\overline{WRL}$ signal is “L” and to the odd addresses when the $\overline{WRH}$ signal is “L”. Data is read when $\overline{RD}$ is “L”. ■ $\overline{WR}$, $\overline{BHE}$, and $\overline{RD}$ selected Data is written when $\overline{WR}$ is “L”. Data is read when $\overline{RD}$ is “L”. Odd addresses are accessed when $\overline{BHE}$ is “L”. Use this mode when using an 8-bit external data bus. While the input level at the $\overline{HOLD}$ pin is “L”, the microcomputer is placed in the hold state. While in the hold state, $\overline{HLDA}$ outputs a “L” level. ALE is used to latch the address. While the input level of the $\overline{RDY}$ pin is “L”, the microcomputer is in the ready state.
$P6_0$ to $P6_7$	I/O port P6	Input/output	This is an 8-bit I/O port equivalent to P0. Pins in this port also function as UART0 and UART1 I/O pins as selected by software.
$P7_0$ to $P7_7$	I/O port P7	Input/output	This is an 8-bit I/O port equivalent to P0 ($P7_0$ and $P7_1$ are N channel open-drain output). Pins in this port also function as timer A_0–A_3, timer B5 or UART2 I/O pins as selected by software.
$P8_0$ to $P8_4$, $P8_6$, $P8_7$, $P8_5$	I/O port P8 I/O port $P8_5$	Input/output Input/output Input/output Input	$P8_0$ to $P8_4$, $P8_6$ and $P8_7$ are I/O ports with the same functions as P0. Using software, they can be made to function as the I/O pins for timer A4 and the input pins for external interrupts. $P8_6$ and $P8_7$ can be set using software to function as the I/O pins for a sub clock generation circuit. In this case, connect a quartz oscillator between $P8_6$ (X_{COUT} pin) and $P8_7$ (X_{CIN} pin). $P8_5$ is an input-only port that also functions for $\overline{NMI}$. The $\overline{NMI}$ interrupt is generated when the input at this pin changes from “H” to “L”. The $\overline{NMI}$ function cannot be cancelled using software. The pull-up cannot be set for this pin.
$P9_0$ to $P9_7$	I/O port P9	Input/output	This is an 8-bit I/O port equivalent to P0. Pins in this port also function as SI/O 3, 4 I/O pins, timer B0–B4 input pins, D-A converter output pins, A-D converter extended input pins, or A-D trigger input pins as selected by software.
$P10_0$ to $P10_7$	I/O port P10	Input/output	This is an 8-bit I/O port equivalent to P0. Pins in this port also funciton as A-D converter input pins. Furthermore, $P10_4$–$P10_7$ also function as input pins for the key input interrupt function.

Note 1: In M30623(80-pin package), the following signals do not have the corresponding external pin.
- $P1_0$/D_8 to $P1_4$/D_{12}, $P1_5$/D_{13}/$\overline{INT_3}$ to $P1_7$/D_{15}/$\overline{INT_5}$
- $P4_4$/$\overline{CS_0}$ to $P4_7$/$\overline{CS_3}$
- $P7_2$/CLK_2/$TA1_{OUT}$/V, $P7_3$/$\overline{CST_2}$/$\overline{RTS_2}$/$TA1_{IN}$/$\overline{V}$, $P7_4$/$TA2_{OUT}$/W, $P7_5$/$TA2_{IN}$/$\overline{W}$
- $P9_1$/$TB1_{IN}$/S_{IN3}

Note 2: The M16C/62T group is not guaranteed to operate in memory expansion and microprocessor modes.

Operation of Functional Blocks

The M16C/62T group accommodates certain units in a single chip. These units include ROM and RAM to store instructions and data and the central processing unit (CPU) to execute arithmetic/logic operations. Also included are peripheral units such as timers, serial I/O, D-A converter, DMAC, CRC calculation circuit, A-D converter, and I/O ports.

The following explains each unit.

Memory

Figure 1.4.1 is a memory map of the M16C/62T group. The address space extends the 1M bytes from address 00000_{16} to $FFFFF_{16}$.

Internal ROM is located as the following, in M30623M4T-XXXGP from address $F8000_{16}$ to $FFFFF_{16}$ (32K bytes), in M30622M8T/M8V-XXXFP and M30623M8T/M8V-XXXGP from address $F0000_{16}$ to $FFFFF_{16}$ (64K bytes), in M30622MCT/MCV-XXXFP and M30623MCT/MCV-XXXGP from address $E0000_{16}$ to $FFFFF_{16}$ (128K bytes).

The vector table for fixed interrupts such as the reset and $\overline{NMI}$ are mapped to $FFFDC_{16}$ to $FFFFF_{16}$. The starting address of the interrupt routine is stored here. The address of the vector table for timer interrupts, etc., can be set as desired using the internal register (INTB). See the section on interrupts for details.

Internal RAM is located as the following, in M30623M4T-XXXGP from address 00400_{16} to $00FFF_{16}$ (3K bytes), in M30622M8T/M8V-XXXFP and M30623M8T/M8V-XXXGP from address 00400_{16} to $013FF_{16}$ (4K bytes), in M30622MCT/MCV-XXXFP and M30623MCT/MCV-XXXGP from address 00400_{16} to $017FF_{16}$ (5K bytes). In addition to storing data, the RAM also stores the stack used when calling subroutines and when interrupts are generated.

The SFR area is mapped to 00000_{16} to $003FF_{16}$. This area accommodates the control registers for peripheral devices such as I/O ports, A-D converter, serial I/O, and timers, etc. Figures 1.7.1 to 1.7.3 are location of peripheral unit control registers. Any part of the SFR area that is not occupied is reserved and cannot be used for other purposes.

The special page vector table is mapped to $FFE00_{16}$ to $FFFDB_{16}$. If the starting addresses of subroutines or the destination addresses of jumps are stored here, subroutine call instructions and jump instructions can be used as 2-byte instructions, reducing the number of program steps.

In memory expansion mode and microprocessor mode, a part of the spaces are reserved and cannot be used. For example, in the M30623MCT/MCV-XXXGP, the following spaces cannot be used.

- The space between 01000_{16} and $03FFF_{16}$ (Memory expansion and microprocessor modes)
- The space between $D0000_{16}$ and $D7FFF_{16}$ (Memory expansion mode)

But the M16C/62T group is not guaranteed to operate in memory expansion and microprocessor modes.

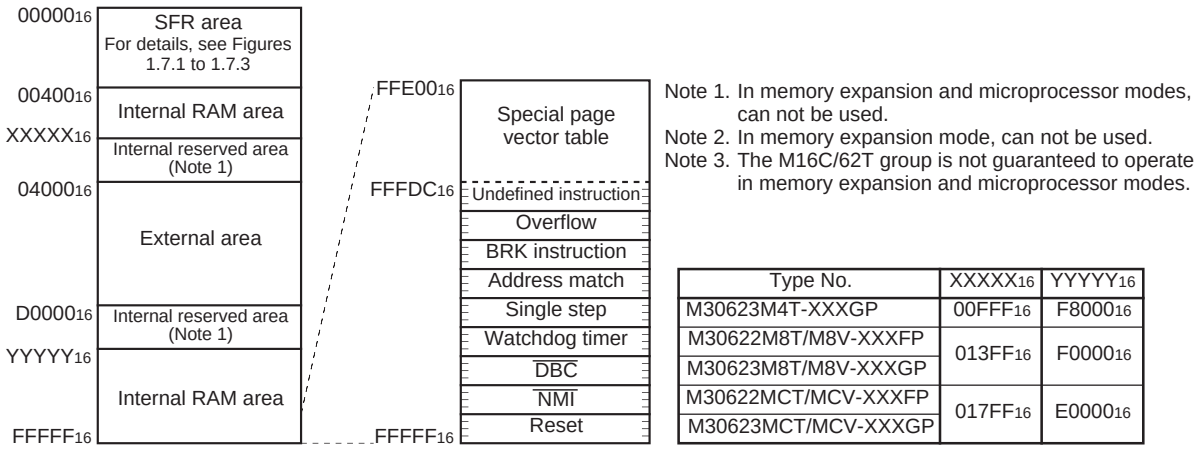

Note 1. In memory expansion and microprocessor modes, can not be used.
Note 2. In memory expansion mode, can not be used.
Note 3. The M16C/62T group is not guaranteed to operate in memory expansion and microprocessor modes.

Type No.	XXXXX_{16}	$YYYYY_{16}$
M30623M4T-XXXGP	$00FFF_{16}$	$F8000_{16}$
M30622M8T/M8V-XXXFP	$013FF_{16}$	$F0000_{16}$
M30623M8T/M8V-XXXGP		
M30622MCT/MCV-XXXFP	$017FF_{16}$	$E0000_{16}$
M30623MCT/MCV-XXXGP		

Figure 1.4.1. Memory map

Central Processing Unit (CPU)

The CPU has a total of 13 registers shown in Figure 1.5.1. Seven of these registers (R0, R1, R2, R3, A0, A1, and FB) come in two sets; therefore, these have two register banks.

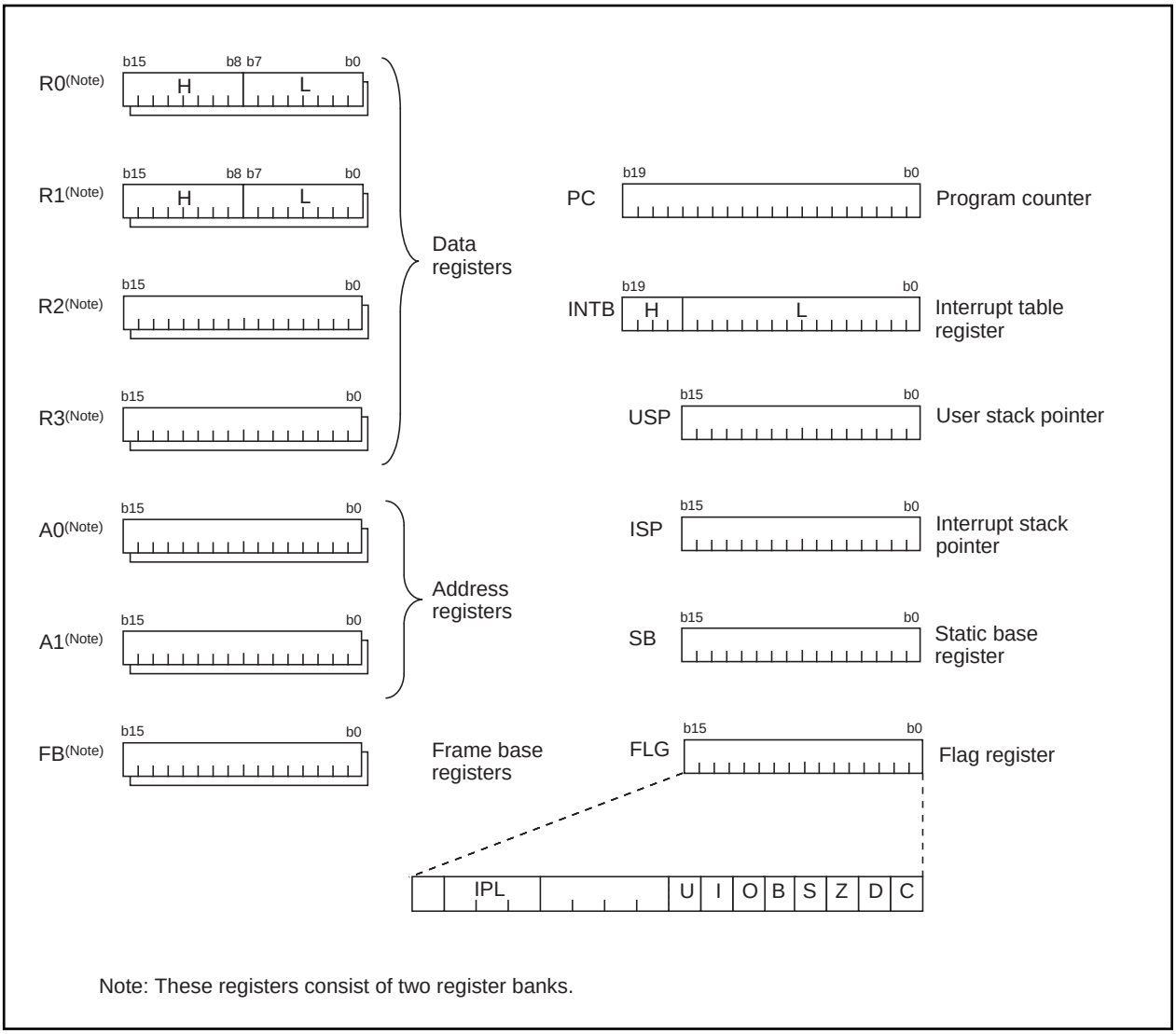

Figure 1.5.1. Central processing unit register

(1) Data registers (R0, R0H, R0L, R1, R1H, R1L, R2, and R3)

Data registers (R0, R1, R2, and R3) are configured with 16 bits, and are used primarily for transfer and arithmetic/logic operations.

Registers R0 and R1 each can be used as separate 8-bit data registers, high-order bits as (R0H/R1H), and low-order bits as (R0L/R1L). In some instructions, registers R2 and R0, as well as R3 and R1 can use as 32-bit data registers (R2R0/R3R1).

(2) Address registers (A0 and A1)

Address registers (A0 and A1) are configured with 16 bits, and have functions equivalent to those of data registers. These registers can also be used for address register indirect addressing and address register relative addressing.

In some instructions, registers A1 and A0 can be combined for use as a 32-bit address register (A1A0).

(3) Frame base register (FB)

Frame base register (FB) is configured with 16 bits, and is used for FB relative addressing.

(4) Program counter (PC)

Program counter (PC) is configured with 20 bits, indicating the address of an instruction to be executed.

(5) Interrupt table register (INTB)

Interrupt table register (INTB) is configured with 20 bits, indicating the start address of an interrupt vector table.

(6) Stack pointer (USP/ISP)

Stack pointer comes in two types: user stack pointer (USP) and interrupt stack pointer (ISP), each configured with 16 bits.

Your desired type of stack pointer (USP or ISP) can be selected by a stack pointer select flag (U flag). This flag is located at the position of bit 7 in the flag register (FLG).

(7) Static base register (SB)

Static base register (SB) is configured with 16 bits, and is used for SB relative addressing.

(8) Flag register (FLG)

Flag register (FLG) is configured with 11 bits, each bit is used as a flag. Figure 1.5.2 shows the flag register (FLG). The following explains the function of each flag:

- **Bit 0: Carry flag (C flag)**
  This flag retains a carry, borrow, or shift-out bit that has occurred in the arithmetic/logic unit.
- **Bit 1: Debug flag (D flag)**
  This flag enables a single-step interrupt.
  When this flag is “1”, a single-step interrupt is generated after instruction execution. This flag is cleared to “0” when the interrupt is acknowledged.
- **Bit 2: Zero flag (Z flag)**
  This flag is set to “1” when an arithmetic operation resulted in 0; otherwise, cleared to “0”.
- **Bit 3: Sign flag (S flag)**
  This flag is set to “1” when an arithmetic operation resulted in a negative value; otherwise, cleared to “0”.
- **Bit 4: Register bank select flag (B flag)**
  This flag chooses a register bank. Register bank 0 is selected when this flag is “0” ; register bank 1 is selected when this flag is “1”.
- **Bit 5: Overflow flag (O flag)**
  This flag is set to “1” when an arithmetic operation resulted in overflow; otherwise, cleared to “0”.
- **Bit 6: Interrupt enable flag (I flag)**
  This flag enables a maskable interrupt.
  An interrupt is disabled when this flag is “0”, and is enabled when this flag is “1”. This flag is cleared to “0” when the interrupt is acknowledged.

- **Bit 7: Stack pointer select flag (U flag)**
  Interrupt stack pointer (ISP) is selected when this flag is “0” ; user stack pointer (USP) is selected when this flag is “1”.
  This flag is cleared to “0” when a hardware interrupt is acknowledged or an INT instruction of software interrupt Nos. 0 to 31 is executed.
- **Bits 8 to 11: Reserved area**
- **Bits 12 to 14: Processor interrupt priority level (IPL)**
  Processor interrupt priority level (IPL) is configured with three bits, for specification of up to eight processor interrupt priority levels from level 0 to level 7.
  If a requested interrupt has priority greater than the processor interrupt priority level (IPL), the interrupt is enabled.
- **Bit 15: Reserved area**

The C, Z, S, and O flags are changed when instructions are executed. See the software manual for details.

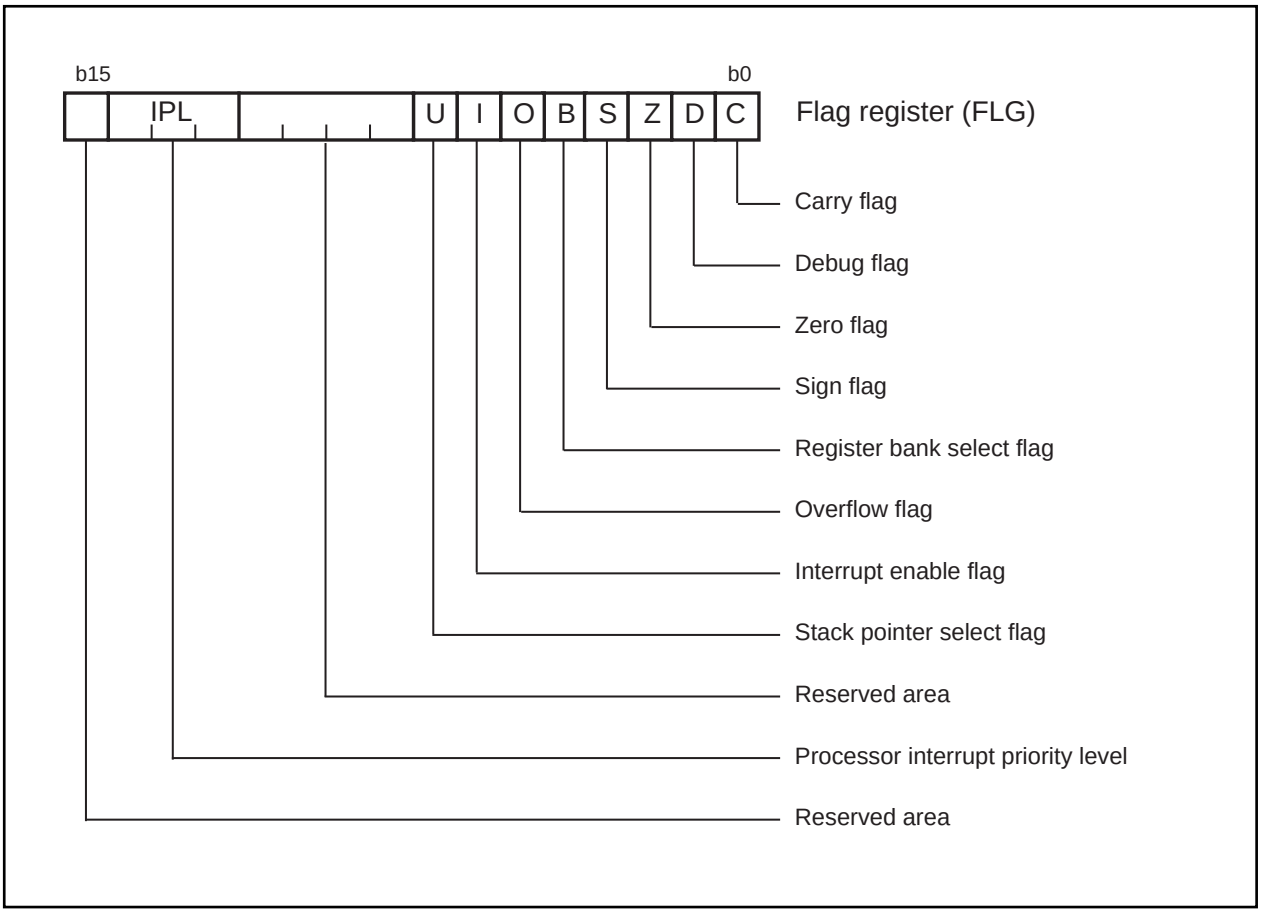

Figure 1.5.2. Flag register (FLG)

Reset

There are two kinds of resets; hardware and software. In both cases, operation is the same after the reset. (See “Software Reset” for details of software resets.) This section explains on hardware resets.

When the supply voltage is in the range where operation is guaranteed, a reset is effected by holding the reset pin level “L” (0.2VCC max.) for at least 20 cycles. When the reset pin level is then returned to the “H” level while main clock is stable, the reset status is cancelled and program execution resumes from the address in the reset vector table.

Figure 1.6.1 shows the example reset circuit. Figure 1.6.2 shows the reset sequence.

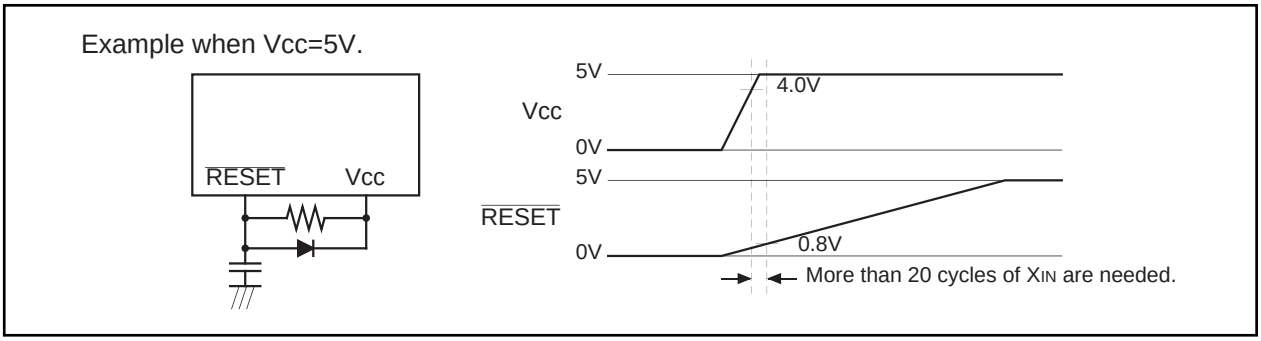

Figure 1.6.1. Example reset circuit

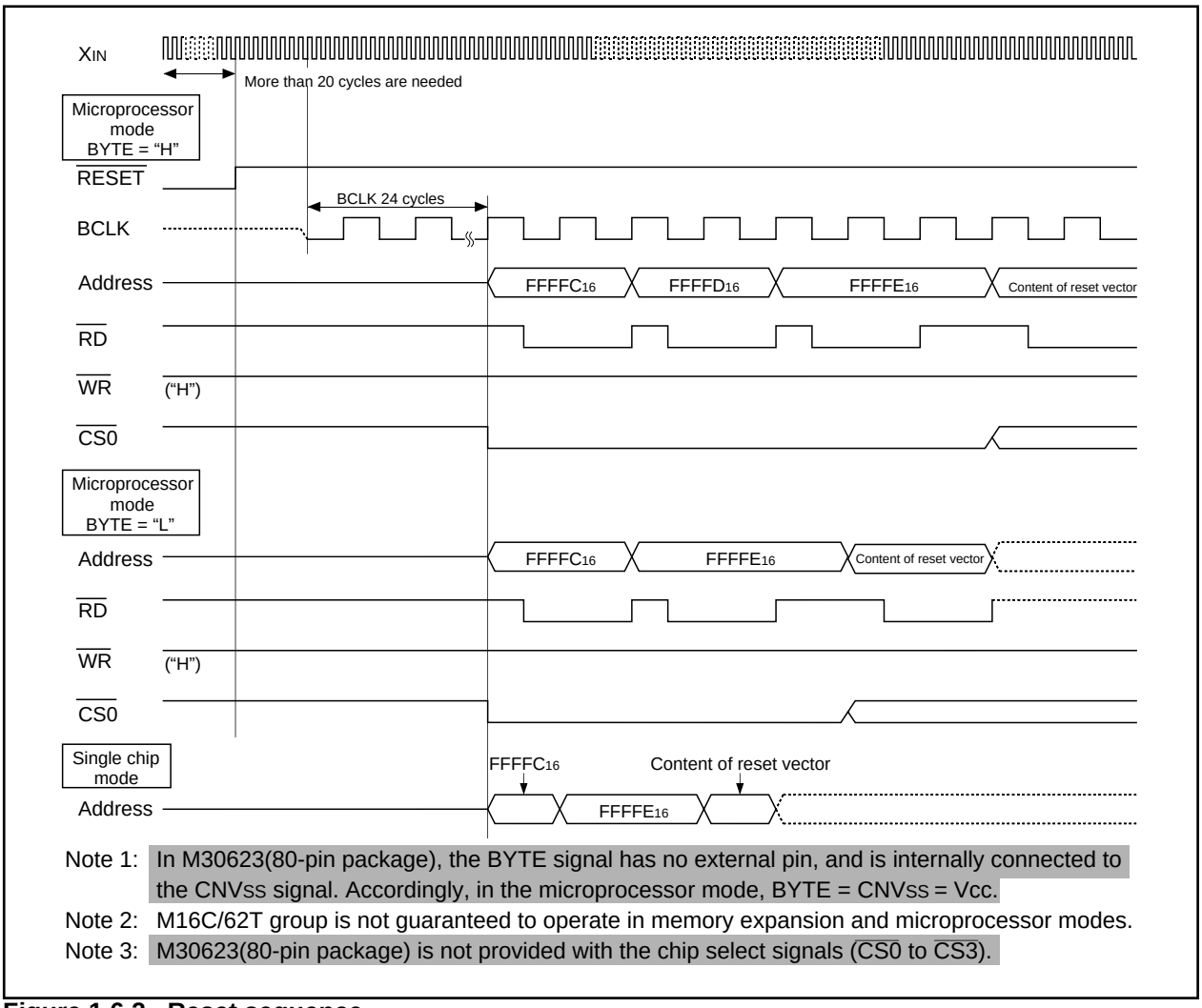

Figure 1.6.2. Reset sequence

Table 1.6.1 shows the statuses of the other pins while the $\overline{\text{RESET}}$ pin level is “L”. Figures 1.6.3 and 1.6.4 show the internal status of the microcomputer immediately after the reset is cancelled.

Table 1.6.1. Pin status when $\overline{\text{RESET}}$ pin level is “L”

Pin name	Status		
	CNVSS = VSS	CNVSS = VCC	
		BYTE = VSS (Note 1)	BYTE = VCC
P0	Input port (floating)	Data input (floating)	Data input (floating)
P1	Input port (floating)	Data input (floating)	Input port (floating)
P2, P3, P40 to P43	Input port (floating)	Address output (undefined)	Address output (undefined)
P44	Input port (floating)	$\overline{\text{CS0}}$ output (“H” level is output)	$\overline{\text{CS0}}$ output (“H” level is output)
P45 to P47	Input port (floating) (pull-up resistor is on)	Input port (floating) (pull-up resistor is on)	Input port (floating) (pull-up resistor is on)
P50	Input port (floating)	$\overline{\text{WR}}$ output (“H” level is output)	$\overline{\text{WR}}$ output (“H” level is output)
P51	Input port (floating)	$\overline{\text{BHE}}$ output (undefined)	$\overline{\text{BHE}}$ output (undefined)
P52	Input port (floating)	$\overline{\text{RD}}$ output (“H” level is output)	$\overline{\text{RD}}$ output (“H” level is output)
P53	Input port (floating)	BCLK output	BCLK output
P54	Input port (floating)	$\overline{\text{HLDA}}$ output (The output value depends on the input to the $\overline{\text{HOLD}}$ pin)	$\overline{\text{HLDA}}$ output (The output value depends on the input to the $\overline{\text{HOLD}}$ pin)
P55	Input port (floating)	$\overline{\text{HOLD}}$ input (floating)	$\overline{\text{HOLD}}$ input (floating)
P56	Input port (floating)	ALE output (“L” level is output)	ALE output (“L” level is output)
P57	Input port (floating)	$\overline{\text{RDY}}$ input (floating)	$\overline{\text{RDY}}$ input (floating)
P6, P7, P80 to P84, P86, P87, P9, P10	Input port (floating)	Input port (floating)	Input port (floating)

Note 1: In M30623(80-pin package), the BYTE signal has no external pin, and is internally connected to the CNVSS signal. Accordingly, in the microprocessor mode, BYTE = CNVSS = VCC.

Note 2: In M30623(80-pin package), Port P1, P44 to P47, P72 to P75 and P91 have no external pin, and are internally the above conditions. After reset, set these ports to one of the following conditions.
- Be output mode, and output “L” level.
- Pull-up resister is on.

(1) Processor mode register 0 (Note 1)	(0004_{16})•••	00_{16}							
(2) Processor mode register 1	(0005_{16})•••	0	0	0	0	0	×	×	0
(3) System clock control register 0	(0006_{16})•••	0	1	0	0	1	0	0	0
(4) System clock control register 1	(0007_{16})•••	0	0	1	0	0	0	0	0
(5) Chip select control register	(0008_{16})•••	0	0	0	0	0	0	0	1
(6) Address match interrupt enable register	(0009_{16})•••	×	×	×	×	×	×	0	0
(7) Protect register	($000A_{16}$)•••	×	×	×	×	×	0	0	0
(8) Data bank register	($000B_{16}$)•••	00_{16}							
(9) Watchdog timer control register	($000F_{16}$)•••	0	0	*	?	?	?	?	?
(10) Address match interrupt register 0	(0010_{16})•••	00_{16}							
	(0011_{16})•••	00_{16}							
	(0012_{16})•••	×	×	×	×	0	0	0	0
(11) Address match interrupt register 1	(0014_{16})•••	00_{16}							
	(0015_{16})•••	00_{16}							
	(0016_{16})•••	×	×	×	×	0	0	0	0
(12) DMA0 control register	($002C_{16}$)•••	0	0	0	0	0	?	0	0
(13) DMA1 control register	($003C_{16}$)•••	0	0	0	0	0	?	0	0
(14) INT3 interrupt control register	(0044_{16})•••	×	×	0	0	?	0	0	0
(15) Timer B5 interrupt control register	(0045_{16})•••	×	×	×	×	?	0	0	0
(16) Timer B4 interrupt control register	(0046_{16})•••	×	×	×	×	?	0	0	0
(17) Timer B3 interrupt control register	(0047_{16})•••	×	×	×	×	?	0	0	0
(18) SI/O4 interrupt control register	(0048_{16})•••	×	×	0	0	?	0	0	0
(19) SI/O3 interrupt control register	(0049_{16})•••	×	×	0	0	?	0	0	0
(20) Bus collision detection interrupt control register	($004A_{16}$)•••	×	×	×	×	?	0	0	0
(21) DMA0 interrupt control register	($004B_{16}$)•••	×	×	×	×	?	0	0	0
(22) DMA1 interrupt control register	($004C_{16}$)•••	×	×	×	×	?	0	0	0
(23) Key input interrupt control register	($004D_{16}$)•••	×	×	×	×	?	0	0	0
(24) A-D conversion interrupt control register	($004E_{16}$)•••	×	×	×	×	?	0	0	0
(25) UART2 transmit interrupt control register	($004F_{16}$)•••	×	×	×	×	?	0	0	0
(26) UART2 receive interrupt control register	(0050_{16})•••	×	×	×	×	?	0	0	0
(27) UART0 transmit interrupt control register	(0051_{16})•••	×	×	×	×	?	0	0	0
(28) UART0 receive interrupt control register	(0052_{16})•••	×	×	×	×	?	0	0	0
(29) UART1 transmit interrupt control register	(0053_{16})•••	×	×	×	×	?	0	0	0
(30) UART1 receive interrupt control register	(0054_{16})•••	×	×	×	×	?	0	0	0
(31) Timer A0 interrupt control register	(0055_{16})•••	×	×	×	×	?	0	0	0
(32) Timer A1 interrupt control register	(0056_{16})•••	×	×	×	×	?	0	0	0
(33) Timer A2 interrupt control register	(0057_{16})•••	×	×	×	×	?	0	0	0
(34) Timer A3 interrupt control register	(0058_{16})•••	×	×	×	×	?	0	0	0
(35) Timer A4 interrupt control register	(0059_{16})•••	×	×	×	×	?	0	0	0
(36) Timer B0 interrupt control register	($005A_{16}$)•••	×	×	×	×	?	0	0	0
(37) Timer B1 interrupt control register	($005B_{16}$)•••	×	×	×	×	?	0	0	0
(38) Timer B2 interrupt control register	($005C_{16}$)•••	×	×	×	×	?	0	0	0
(39) INT0 interrupt control register	($005D_{16}$)•••	×	×	0	0	?	0	0	0
(40) INT1 interrupt control register	($005E_{16}$)•••	×	×	0	0	?	0	0	0
(41) INT2 interrupt control register	($005F_{16}$)•••	×	×	0	0	?	0	0	0
(42) Timer B3,4,5 count start flag	(0340_{16})•••	0	0	0	×	×	×	×	×
(43) Three-phase PWM control register 0	(0348_{16})•••	00_{16}							
(44) Three-phase PWM control register 1	(0349_{16})•••	00_{16}							
(45) Three-phase output buffer register 0	($034A_{16}$)•••	00_{16}							
(46) Three-phase output buffer register 1	($034B_{16}$)•••	00_{16}							
(47) Timer B3 mode register	($035B_{16}$)•••	0	0	?	×	0	0	0	0
(48) Timer B4 mode register	($035C_{16}$)•••	0	0	?	×	0	0	0	0
(49) Timer B5 mode register	($035D_{16}$)•••	0	0	?	×	0	0	0	0
(50) Interrupt cause select register	($035F_{16}$)•••	00_{16}							

* : This bit is the cold start / warm start flag, is set to "0" at power on reset (refer to Page 71).
× : Nothing is mapped to this bit.
? : Undefined
The content of other registers and RAM is undefined when the microcomputer is reset.
The initial values must therefore be set.

Note 1 : When the V_{CC} level is applied to the CNV_{SS} pin, it is 03_{16} at a reset.

Figure 1.6.3. Device's internal status after a reset is cleared

(51) SI/O3 control register	(0362_{16})•••	0 1 0 0 0 0 0 0
(52) SI/O4 control register	(0366_{16})•••	0 1 0 0 0 0 0 0
(53) UART2 special mode register	(0377_{16})•••	00_{16}
(54) UART2 transmit/receive mode register	(0378_{16})•••	00_{16}
(55) UART2 transmit/receive control register 0	($037C_{16}$)•••	0 0 0 0 1 0 0 0
(56) UART2 transmit/receive control register 1	($037D_{16}$)•••	0 0 0 0 0 0 1 0
(57) Count start flag	(0380_{16})•••	00_{16}
(58) Clock prescaler reset flag	(0381_{16})•••	0 X X X X X X X
(59) One-shot start flag	(0382_{16})•••	0 0 X 0 0 0 0 0
(60) Trigger select flag	(0383_{16})•••	00_{16}
(61) Up-down flag	(0384_{16})•••	00_{16}
(62) Timer A0 mode register	(0396_{16})•••	00_{16}
(63) Timer A1 mode register	(0397_{16})•••	00_{16}
(64) Timer A2 mode register	(0398_{16})•••	00_{16}
(65) Timer A3 mode register	(0399_{16})•••	00_{16}
(66) Timer A4 mode register	($039A_{16}$)•••	00_{16}
(67) Timer B0 mode register	($039B_{16}$)•••	0 0 ? X 0 0 0 0
(68) Timer B1 mode register	($039C_{16}$)•••	0 0 ? X 0 0 0 0
(69) Timer B2 mode register	($039D_{16}$)•••	0 0 ? X 0 0 0 0
(70) UART0 transmit/receive mode register	($03A0_{16}$)•••	00_{16}
(71) UART0 transmit/receive control register 0	($03A4_{16}$)•••	0 0 0 0 1 0 0 0
(72) UART0 transmit/receive control register 1	($03A5_{16}$)•••	0 0 0 0 0 0 1 0
(73) UART1 transmit/receive mode register	($03A8_{16}$)•••	00_{16}
(74) UART1 transmit/receive control register 0	($03AC_{16}$)•••	0 0 0 0 1 0 0 0
(75) UART1 transmit/receive control register 1	($03AD_{16}$)•••	0 0 0 0 0 0 1 0
(76) UART transmit/receive control register 2	($03B0_{16}$)•••	X 0 0 0 0 0 0 0
(77) DMA0 cause select register	($03B8_{16}$)•••	00_{16}
(78) DMA1 cause select register	($03BA_{16}$)•••	00_{16}
(79) A-D control register 2	($03D4_{16}$)•••	0 0 0 0 X X X 0
(80) A-D control register 0	($03D6_{16}$)•••	0 0 0 0 0 ? ? ?
(81) A-D control register 1	($03D7_{16}$)•••	00_{16}
(82) D-A control register	($03DC_{16}$)•••	00_{16}
(83) Port P0 direction register	($03E2_{16}$)•••	00_{16}
(84) Port P1 direction register	($03E3_{16}$)•••	00_{16}
(85) Port P2 direction register	($03E6_{16}$)•••	00_{16}
(86) Port P3 direction register	($03E7_{16}$)•••	00_{16}
(87) Port P4 direction register	($03EA_{16}$)•••	00_{16}
(88) Port P5 direction register	($03EB_{16}$)•••	00_{16}
(89) Port P6 direction register	($03EE_{16}$)•••	00_{16}
(90) Port P7 direction register	($03EF_{16}$)•••	00_{16}
(91) Port P8 direction register	($03F2_{16}$)•••	0 0 X 0 0 0 0 0
(92) Port P9 direction register	($03F3_{16}$)•••	00_{16}
(93) Port P10 direction register	($03F6_{16}$)•••	00_{16}
(94) Pull-up control register 0	($03FC_{16}$)•••	00_{16}
(95) Pull-up control register 1 (Note 1)	($03FD_{16}$)•••	00_{16}
(96) Pull-up control register 2	($03FE_{16}$)•••	00_{16}
(97) Port control register	($03FF_{16}$)•••	00_{16}
(98) Data registers (R0/R1/R2/R3)		0000_{16}
(99) Address registers(A0/A1)		0000_{16}
(100) Frame base register (FB)		0000_{16}
(101) Interrupt table register (INTB)		0000_{16}
(102) User stack pointer (USP)		0000_{16}
(103) Interrupt stack pointer (ISP)		0000_{16}
(104) Static base register (SB)		0000_{16}
(105) Flag register(FLG)		0000_{16}

X : Nothing is mapped to this bit.
? : Undefined

The content of other registers and RAM is undefined when the microcomputer is reset.
The initial values must therefore be set.

Note 1 : When the V_{CC} level is applied to the CNV_{SS} pin, it is 02_{16} at a reset.

Figure 1.6.4. Device's internal status after a reset is cleared

0000_{16}	
0001_{16}	
0002_{16}	
0003_{16}	
0004_{16}	Processor mode register 0 (PM0)
0005_{16}	Processor mode register 1(PM1)
0006_{16}	System clock control register 0 (CM0)
0007_{16}	System clock control register 1 (CM1)
0008_{16}	Chip select control register (CSR)
0009_{16}	Address match interrupt enable register (AIER)
$000A_{16}$	Protect register (PRCR)
$000B_{16}$	Data bank register (DBR)
$000C_{16}$	
$000D_{16}$	
$000E_{16}$	Watchdog timer start register (WDTS)
$000F_{16}$	Watchdog timer control register (WDC)
0010_{16}	Address match interrupt register 0 (RMAD0)
0011_{16}	
0012_{16}	
0013_{16}	
0014_{16}	Address match interrupt register 1 (RMAD1)
0015_{16}	
0016_{16}	
0017_{16}	
0018_{16}	
0019_{16}	
$001A_{16}$	
$001B_{16}$	
$001C_{16}$	
$001D_{16}$	
$001E_{16}$	
$001F_{16}$	
0020_{16}	DMA0 source pointer (SAR0)
0021_{16}	
0022_{16}	
0023_{16}	
0024_{16}	DMA0 destination pointer (DAR0)
0025_{16}	
0026_{16}	
0027_{16}	
0028_{16}	DMA0 transfer counter (TCR0)
0029_{16}	
$002A_{16}$	
$002B_{16}$	
$002C_{16}$	DMA0 control register (DM0CON)
$002D_{16}$	
$002E_{16}$	
$002F_{16}$	
0030_{16}	DMA1 source pointer (SAR1)
0031_{16}	
0032_{16}	
0033_{16}	
0034_{16}	DMA1 destination pointer (DAR1)
0035_{16}	
0036_{16}	
0037_{16}	
0038_{16}	DMA1 transfer counter (TCR1)
0039_{16}	
$003A_{16}$	
$003B_{16}$	
$003C_{16}$	DMA1 control register (DM1CON)
$003D_{16}$	
$003E_{16}$	
$003F_{16}$	

0040_{16}	
0041_{16}	
0042_{16}	
0043_{16}	
0044_{16}	INT3 interrupt control register (INT3IC)
0045_{16}	Timer B5 interrupt control register (TB5IC)
0046_{16}	Timer B4 interrupt control register (TB4IC)
0047_{16}	Timer B3 interrupt control register (TB3IC)
0048_{16}	SI/O4 interrupt control register (S4IC) INT5 interrupt control register (INT5IC)
0049_{16}	SI/O3 interrupt control register (S3IC) INT4 interrupt control register (INT4IC)
$004A_{16}$	Bus collision detection interrupt control register (BCNIC)
$004B_{16}$	DMA0 interrupt control register (DM0IC)
$004C_{16}$	DMA1 interrupt control register (DM1IC)
$004D_{16}$	Key input interrupt control register (KUPIC)
$004E_{16}$	A-D conversion interrupt control register (ADIC)
$004F_{16}$	UART2 transmit interrupt control register (S2TIC)
0050_{16}	UART2 receive interrupt control register (S2RIC)
0051_{16}	UART0 transmit interrupt control register (S0TIC)
0052_{16}	UART0 receive interrupt control register (S0RIC)
0053_{16}	UART1 transmit interrupt control register (S1TIC)
0054_{16}	UART1 receive interrupt control register (S1RIC)
0055_{16}	Timer A0 interrupt control register (TA0IC)
0056_{16}	Timer A1 interrupt control register (TA1IC)
0057_{16}	Timer A2 interrupt control register (TA2IC)
0058_{16}	Timer A3 interrupt control register (TA3IC)
0059_{16}	Timer A4 interrupt control register (TA4IC)
$005A_{16}$	Timer B0 interrupt control register (TB0IC)
$005B_{16}$	Timer B1 interrupt control register (TB1IC)
$005C_{16}$	Timer B2 interrupt control register (TB2IC)
$005D_{16}$	INT0 interrupt control register (INT0IC)
$005E_{16}$	INT1 interrupt control register (INT1IC)
$005F_{16}$	INT2 interrupt control register (INT2IC)
0060_{16}	
0061_{16}	
0062_{16}	
0063_{16}	
0064_{16}	
0065_{16}	
≈	≈
$032A_{16}$	
$032B_{16}$	
$032C_{16}$	
$032D_{16}$	
$032E_{16}$	
$032F_{16}$	
0330_{16}	
0331_{16}	
0332_{16}	
0333_{16}	
0334_{16}	
0335_{16}	
0336_{16}	
0337_{16}	
0338_{16}	
0339_{16}	
$033A_{16}$	
$033B_{16}$	
$033C_{16}$	
$033D_{16}$	
$033E_{16}$	
$033F_{16}$	

Figure 1.7.1. Location of peripheral unit control registers (1)

0340_{16}	Timer B3, 4, 5 count start flag (TBSR)
0341_{16}	
0342_{16}	Timer A1-1 register (TA11)
0343_{16}	
0344_{16}	Timer A2-1 register (TA21)
0345_{16}	
0346_{16}	Timer A4-1 register (TA41)
0347_{16}	
0348_{16}	Three-phase PWM control register 0(INVC0)
0349_{16}	Three-phase PWM control register 1(INVC1)
$034A_{16}$	Three-phase output buffer register 0(IDB0)
$034B_{16}$	Three-phase output buffer register 1(IDB1)
$034C_{16}$	Dead time timer(DTT)
$034D_{16}$	Timer B2 interrupt occurrence frequency set counter(ICTB2)
$034E_{16}$	
$034F_{16}$	
0350_{16}	Timer B3 register (TB3)
0351_{16}	
0352_{16}	Timer B4 register (TB4)
0353_{16}	
0354_{16}	Timer B5 register (TB5)
0355_{16}	
0356_{16}	
0357_{16}	
0358_{16}	
0359_{16}	
$035A_{16}$	
$035B_{16}$	Timer B3 mode register (TB3MR)
$035C_{16}$	Timer B4 mode register (TB4MR)
$035D_{16}$	Timer B5 mode register (TB5MR)
$035E_{16}$	
$035F_{16}$	Interrupt cause select register (IFSR)
0360_{16}	SI/O3 transmit/receive register (S3TRR)
0361_{16}	
0362_{16}	SI/O3 control register (S3C)
0363_{16}	SI/O3 bit rate generator (S3BRG)
0364_{16}	SI/O4 transmit/receive register (S4TRR)
0365_{16}	
0366_{16}	SI/O4 control register (S4C)
0367_{16}	SI/O4 bit rate generator (S4BRG)
0368_{16}	
0369_{16}	
$036A_{16}$	
$036B_{16}$	
$036C_{16}$	
$036D_{16}$	
$036E_{16}$	
$036F_{16}$	
0370_{16}	
0371_{16}	
0372_{16}	
0373_{16}	
0374_{16}	
0375_{16}	
0376_{16}	
0377_{16}	UART2 special mode register (U2SMR)
0378_{16}	UART2 transmit/receive mode register (U2MR)
0379_{16}	UART2 bit rate generator (U2BRG)
$037A_{16}$	UART2 transmit buffer register (U2TB)
$037B_{16}$	
$037C_{16}$	UART2 transmit/receive control register 0 (U2C0)
$037D_{16}$	UART2 transmit/receive control register 1 (U2C1)
$037E_{16}$	UART2 receive buffer register (U2RB)
$037F_{16}$	

0380_{16}	Count start flag (TABSR)
0381_{16}	Clock prescaler reset flag (CPSRF)
0382_{16}	One-shot start flag (ONSF)
0383_{16}	Trigger select register (TRGSR)
0384_{16}	Up-down flag (UDF)
0385_{16}	
0386_{16}	Timer A0 (TA0)
0387_{16}	
0388_{16}	Timer A1 (TA1)
0389_{16}	
$038A_{16}$	Timer A2 (TA2)
$038B_{16}$	
$038C_{16}$	Timer A3 (TA3)
$038D_{16}$	
$038E_{16}$	Timer A4 (TA4)
$038F_{16}$	
0390_{16}	Timer B0 (TB0)
0391_{16}	
0392_{16}	Timer B1 (TB1)
0393_{16}	
0394_{16}	Timer B2 (TB2)
0395_{16}	
0396_{16}	Timer A0 mode register (TA0MR)
0397_{16}	Timer A1 mode register (TA1MR)
0398_{16}	Timer A2 mode register (TA2MR)
0399_{16}	Timer A3 mode register (TA3MR)
$039A_{16}$	Timer A4 mode register (TA4MR)
$039B_{16}$	Timer B0 mode register (TB0MR)
$039C_{16}$	Timer B1 mode register (TB1MR)
$039D_{16}$	Timer B2 mode register (TB2MR)
$039E_{16}$	
$039F_{16}$	
$03A0_{16}$	UART0 transmit/receive mode register (U0MR)
$03A1_{16}$	UART0 bit rate generator (U0BRG)
$03A2_{16}$	UART0 transmit buffer register (U0TB)
$03A3_{16}$	
$03A4_{16}$	UART0 transmit/receive control register 0 (U0C0)
$03A5_{16}$	UART0 transmit/receive control register 1 (U0C1)
$03A6_{16}$	UART0 receive buffer register (U0RB)
$03A7_{16}$	
$03A8_{16}$	UART1 transmit/receive mode register (U1MR)
$03A9_{16}$	UART1 bit rate generator (U1BRG)
$03AA_{16}$	UART1 transmit buffer register (U1TB)
$03AB_{16}$	
$03AC_{16}$	UART1 transmit/receive control register 0 (U1C0)
$03AD_{16}$	UART1 transmit/receive control register 1 (U1C1)
$03AE_{16}$	UART1 receive buffer register (U1RB)
$03AF_{16}$	
$03B0_{16}$	UART transmit/receive control register 2 (UCON)
$03B1_{16}$	
$03B2_{16}$	
$03B3_{16}$	
$03B4_{16}$	
$03B5_{16}$	
$03B6_{16}$	
$03B7_{16}$	
$03B8_{16}$	DMA0 request cause select register (DM0SL)
$03B9_{16}$	
$03BA_{16}$	DMA1 request cause select register (DM1SL)
$03BB_{16}$	
$03BC_{16}$	CRC data register (CRCD)
$03BD_{16}$	
$03BE_{16}$	CRC input register (CRCIN)
$03BF_{16}$	

Figure 1.7.2. Location of peripheral unit control registers (2)

$03C0_{16}$	A-D register 0 (AD0)
$03C1_{16}$	
$03C2_{16}$	A-D register 1 (AD1)
$03C3_{16}$	
$03C4_{16}$	A-D register 2 (AD2)
$03C5_{16}$	
$03C6_{16}$	A-D register 3 (AD3)
$03C7_{16}$	
$03C8_{16}$	A-D register 4 (AD4)
$03C9_{16}$	
$03CA_{16}$	A-D register 5 (AD5)
$03CB_{16}$	
$03CC_{16}$	A-D register 6 (AD6)
$03CD_{16}$	
$03CE_{16}$	A-D register 7 (AD7)
$03CF_{16}$	
$03D0_{16}$	
$03D1_{16}$	
$03D2_{16}$	
$03D3_{16}$	
$03D4_{16}$	A-D control register 2 (ADCON2)
$03D5_{16}$	
$03D6_{16}$	A-D control register 0 (ADCON0)
$03D7_{16}$	A-D control register 1 (ADCON1)
$03D8_{16}$	D-A register 0 (DA0)
$03D9_{16}$	
$03DA_{16}$	D-A register 1 (DA1)
$03DB_{16}$	
$03DC_{16}$	D-A control register (DACON)
$03DD_{16}$	
$03DE_{16}$	
$03DF_{16}$	
$03E0_{16}$	Port P0 (P0)
$03E1_{16}$	Port P1 (P1)
$03E2_{16}$	Port P0 direction register (PD0)
$03E3_{16}$	Port P1 direction register (PD1)
$03E4_{16}$	Port P2 (P2)
$03E5_{16}$	Port P3 (P3)
$03E6_{16}$	Port P2 direction register (PD2)
$03E7_{16}$	Port P3 direction register (PD3)
$03E8_{16}$	Port P4 (P4)
$03E9_{16}$	Port P5 (P5)
$03EA_{16}$	Port P4 direction register (PD4)
$03EB_{16}$	Port P5 direction register (PD5)
$03EC_{16}$	Port P6 (P6)
$03ED_{16}$	Port P7 (P7)
$03EE_{16}$	Port P6 direction register (PD6)
$03EF_{16}$	Port P7 direction register (PD7)
$03F0_{16}$	Port P8 (P8)
$03F1_{16}$	Port P9 (P9)
$03F2_{16}$	Port P8 direction register (PD8)
$03F3_{16}$	Port P9 direction register (PD9)
$03F4_{16}$	Port P10 (P10)
$03F5_{16}$	
$03F6_{16}$	Port P10 direction register (PD10)
$03F7_{16}$	
$03F8_{16}$	
$03F9_{16}$	
$03FA_{16}$	
$03FB_{16}$	
$03FC_{16}$	Pull-up control register 0 (PUR0)
$03FD_{16}$	Pull-up control register 1 (PUR1)
$03FE_{16}$	Pull-up control register 2 (PUR2)
$03FF_{16}$	Port control register (PCR)

Figure 1.7.3. Location of peripheral unit control registers (3)

Memory Space Expansion Features

Here follows the description of the memory space expansion function.

With the processor running in memory expansion mode or in microprocessor mode, the memory space expansion features provide the means of expanding the accessible space. The memory space expansion features run in one of the three modes given below.

(1) Normal mode (no expansion)
(2) Memory space expansion mode 1 (to be referred as expansion mode 1)
(3) Memory space expansion mode 2 (to be referred as expansion mode 2)

Use bits 5 and 4 (PM15, PM14) of processor mode register 1 to select a desired mode. The external memory area the chip select signal indicates is different in each mode so that the accessible memory space varies. Table 1.8.1 shows how to set individual modes and corresponding accessible memory spaces. For external memory area the chip select signal indicates, see Table 1.12.1 on page 33.

But M30623 (80-pin package) is not provided with the output pin for the chip select signal. And, the M16C/62T group is not guaranteed to operate in memory expansion and microprocessor modes.

Table 1.8.1. The way of setting memory space expansion modes and corresponding memory spaces

Expansion mode	How to set PM15 and PM14	Accessible memory space
Normal mode (no expansion)	0, 0	Up to 1M byte
Expansion mode 1	1, 0	Up to 1.2M bytes
Expansion mode 2	1, 1	Up to 4M bytes

Here follows the description of individual modes.

(1) Normal mode (a mode with memory not expanded)

'Normal mode' means a mode in which memory is not expanded.

Figure 1.8.1 shows the memory maps and the chip select areas in normal mode.

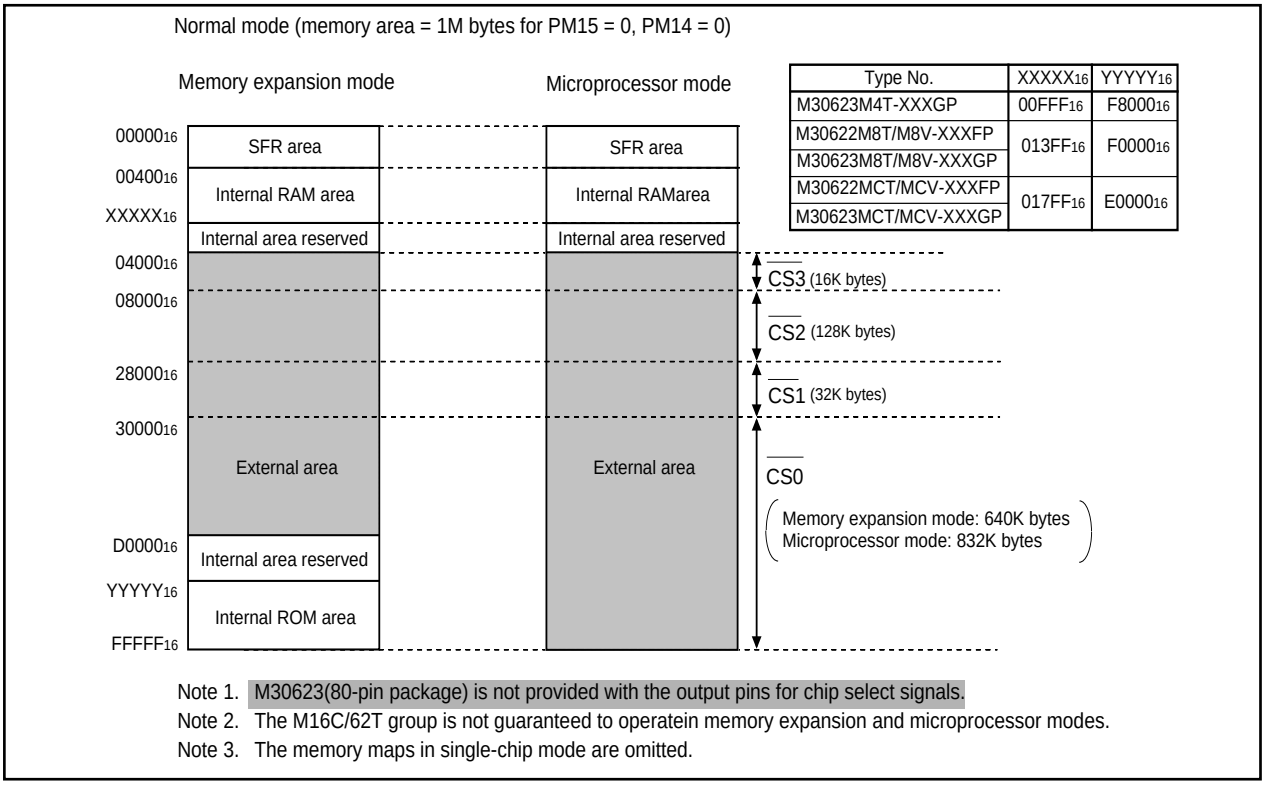

Figure 1.8.1. The memory maps and the chip select areas in normal mode

(2) Expansion mode 1

In this mode, the memory space can be expanded by 176K bytes in addition to that in normal mode. Figure 1.8.2 shows the memory location and chip select area in expansion mode 1.

In accessing data in expansion mode 1, $\overline{CS3}$, $\overline{CS2}$, and $\overline{CS1}$ go active in the area from 04000_{16} through $2FFFF_{16}$; in fetching a program, $\overline{CS0}$ goes active. That is, the address space is expanded by using the area from 04000_{16} through $2FFFF_{16}$ (176K bytes) appropriately for accessing data ($\overline{CS3}$, $\overline{CS2}$, $\overline{CS1}$) and fetching a program ($\overline{CS0}$).

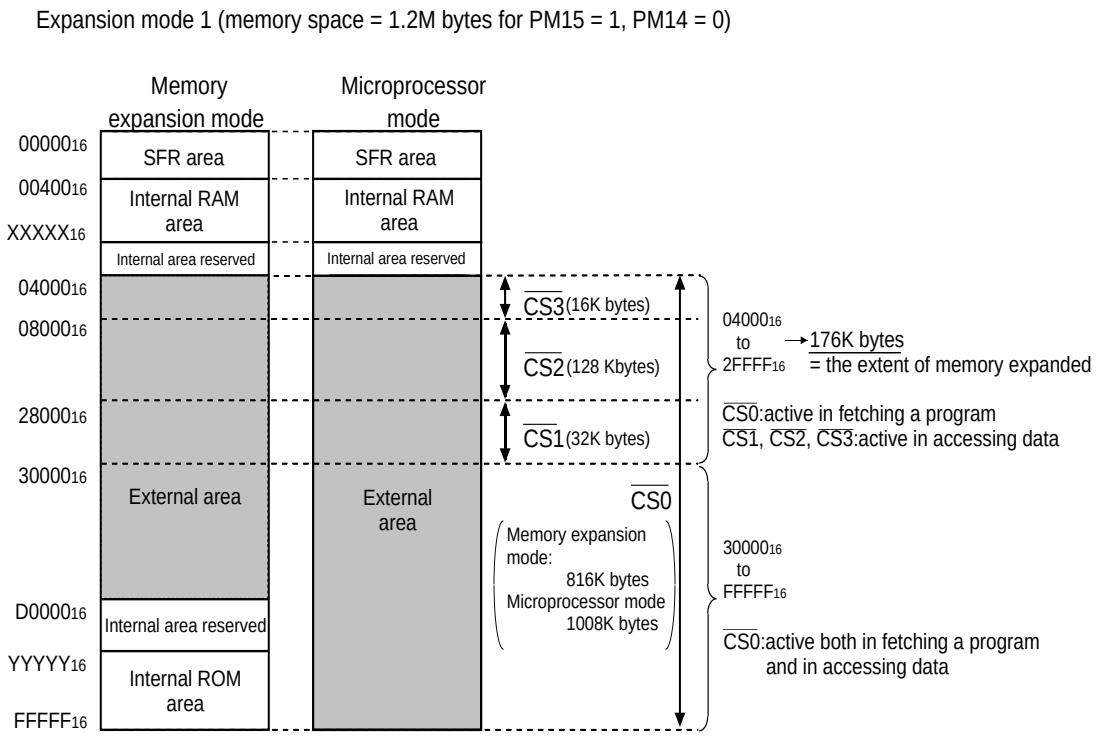

Type No.	XXXXX₁₆	YYYYY₁₆
M30623M4T-XXXGP	00FFF₁₆	F8000₁₆
M30622M8T/M8V-XXXFP	013FF₁₆	F0000₁₆
M30623M8T/M8V-XXXGP		
M30622MCT/MCV-XXXFP	017FF₁₆	E0000₁₆
M30623MCT/MCV-XXXGP		

Note 1. M30623(80-pin package) is not provided with the output pin for the chip select signal.
Note 2. The M16C/62T group is not guaranteed to operate in memory expansion and microprocessor modes.
Note 3. The memory maps in single-chip mode are omitted.

Figure 1.8.2. Memory location and chip select area in expansion mode 1

A connection example

Figure 1.8.3 shows a connection example of the MCU with the external memories in expansion mode 1. In this example, $\overline{CS0}$ is connected with a 1-M byte flash ROM and $\overline{CS2}$ is connected with a 128-K byte SRAM.

An example of connecting the MCU with external memories in expansion mode 1
(An example of using M30622MC in microprocessor mode)

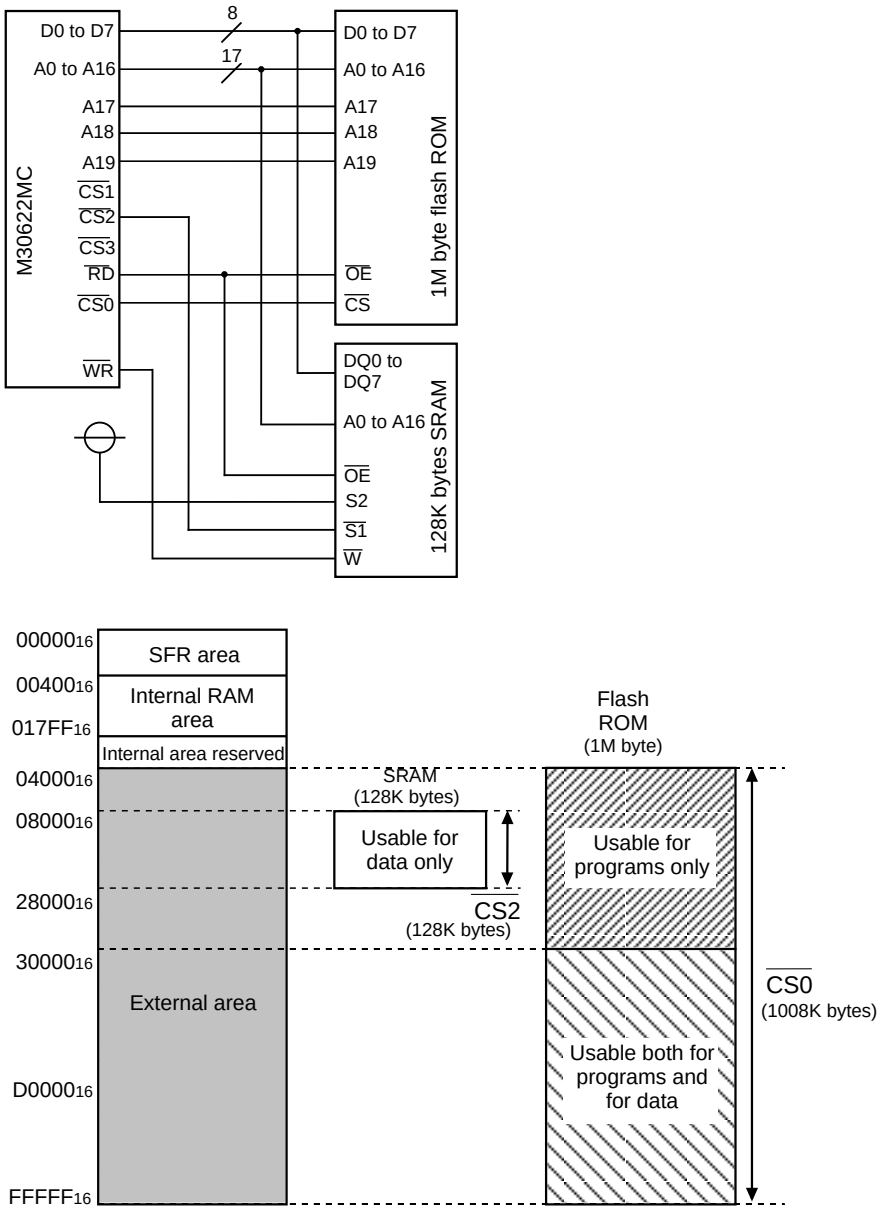

Note 1. M30623(80-pin package) is not provided with the output pin for the chip select signal.

Note 2. The M16C/62T group is not guaranteed to operate in memory expansion and microprocessor modes.

Figure 1.8.3. External memory connect example in expansion mode 1

(3) Expansion mode 2

In expansion mode 2, the data bank register (0000B16) goes effective. Figure 1.8.4 shows the data bank register.

Data bank register

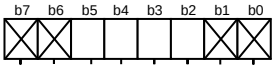

Symbol	Address	When reset
DBR	000B16	0016

Bit symbol	Bit name	Description	R	W
Nothing is assigned. In an attempt to write to these bits, write "0". The value, if read, turns out to be "0".			—	—
OFS	Offset bit	0: Not offset 1: Offset	○	○
BSR	Bank selection bits	b5 b4 b3 0 0 0: Bank 0 0 1 0: Bank 2 1 0 0: Bank 4 1 1 0: Bank 6 b5 b4 b3 0 0 1: Bank 1 0 1 1: Bank 3 1 0 1: Bank 5 1 1 1: Bank 7	○	○
Nothing is assigned. In an attempt to write to these bits, write "0". The value, if read, turns out to be "0".			—	—

Figure 1.8.4. Data bank register

Expansion mode 2 (memory space = 4M bytes for PM15 = 1, PM14 = 1)

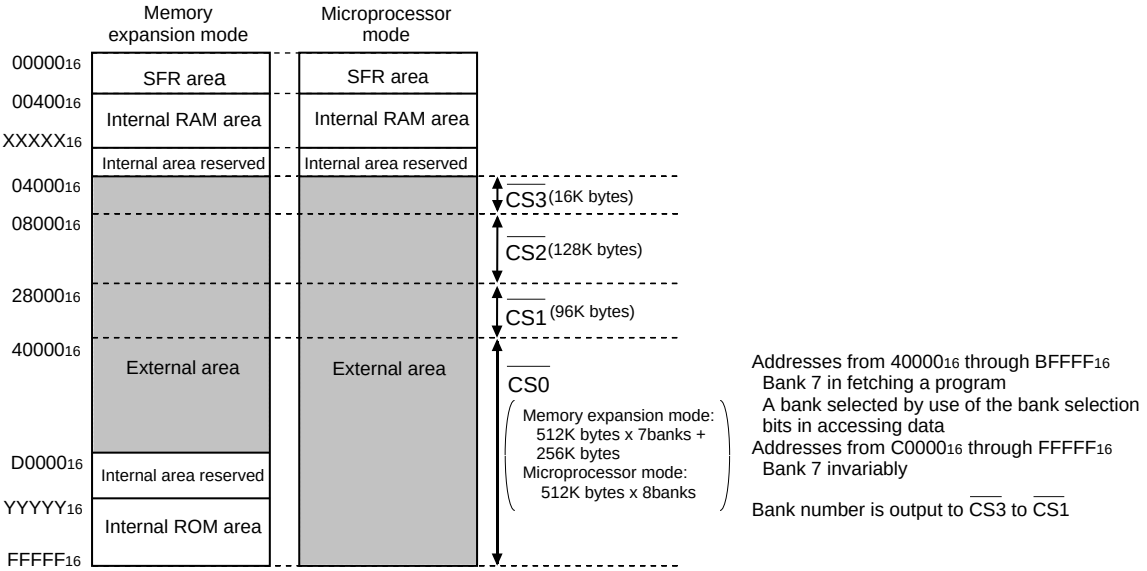

Type No.	XXXXX16	YYYYY16
M30623M4T-XXXGP	00FFF16	F8000016
M30622M8T/M8V-XXXFP	013FF16	F0000016
M30623M8T/M8V-XXXGP		
M30622MCT/MCV-XXXFP	017FF16	E0000016
M30623MCT/MCV-XXXGP		

Note 1. M30623(80-pin package) is not provided with the output pin for the chip select signal.
Note 2. The M16C/62T group is not guaranteed to operate in memory expansion and microprocessor modes.
Note 3. The memory maps in single-chip mode are omitted.

Figure 1.8.5. Memory location and chip select area in expansion mode 2

The data bank register is made up of the bank selection bits (bits 5 through 3) and the offset bit (bit 2). The bank selection bits are used to set a bank number for accessing data lying between 40000_{16} and $BFFFF_{16}$. Assigning 1 to the offset bit provides the means to set offsets covering 40000_{16}.

Figure 1.8.5 shows the memory location and chip select areas in expansion mode 2.

The area relevant to $\overline{CS0}$ ranges from 40000_{16} through $FFFFF_{16}$. As for the area from 40000_{16} through $BFFFF_{16}$, the bank number set by use of the bank selection bits are output from the output terminals $\overline{CS3}$ - $\overline{CS1}$ only in accessing data. In fetching a program, bank 7 (111_2) is output from $\overline{CS3}$ - $\overline{CS1}$. As for the area from $C0000_{16}$ through $FFFFF_{16}$, bank 7 (111_2) is output from $\overline{CS3}$ - $\overline{CS1}$ without regard to accessing data or to fetching a program.

In accessing an area irrelevant to $\overline{CS0}$, a chip select signal $\overline{CS3}$ (4000_{16} - $7FFF_{16}$), $\overline{CS2}$ (8000_{16} - $27FFF_{16}$), and $\overline{CS1}$ (28000_{16} - $3FFFF_{16}$) is output depending on the address as in the past.

Figure 1.8.6 shows an example of connecting the MCU with a 4-M byte ROM and to a 128-K byte SRAM. Connect the chip select of 4-M byte ROM with $\overline{CS0}$. Connect M16C's $\overline{CS3}$, $\overline{CS2}$, and $\overline{CS1}$ with address inputs A21, A20, and A19 respectively. Connect M16C's output A19 with address input A18. Figure 1.8.7 shows the relationship between addresses of the 4-M byte ROM and those of M16C.

With no offsets effected, banks switch from one 512-K byte segment to another 512-K byte segment. Bank selection bits need to be changed in dealing with data lying across the boundary between banks every time a bank switches to another. Assigning 1 to the offset bit brings about offsets covering 40000_{16} so that data can be accessed without changing the bank selection bits. For instance, accessing 80000_{16} of bank 0 with offsets effected causes the output bank number to turn to 1, and AD19 is inverted to be output; this results in accessing 40000_{16} of bank 1.

On the other hand, the SRAM's chip select assumes that $\overline{CS0}$=1 (not selected) and $\overline{CS2}$=0 (selected), so connect $\overline{CS0}$ with S2 and $\overline{CS2}$ with $\overline{S1}$. If the SRAM doesn't have a bipolar chip select input terminal, decode $\overline{CS0}$ and $\overline{CS2}$ externally.

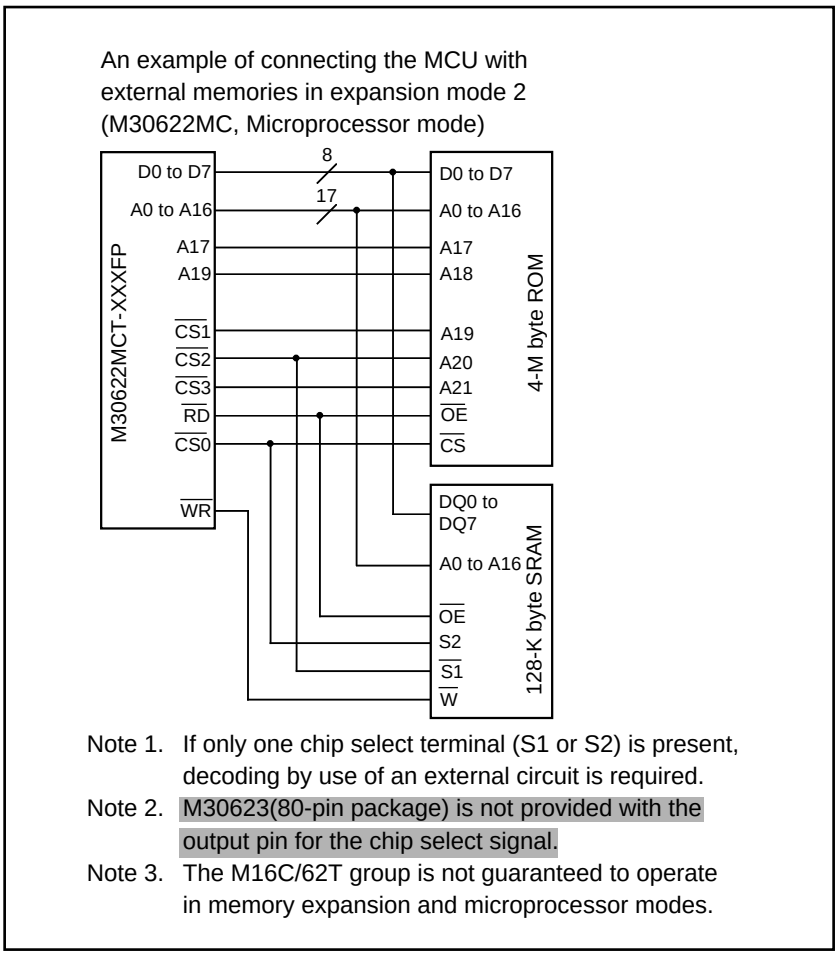

Figure 1.8.6. An example of connecting the MCU with external memories in expansion mode 2

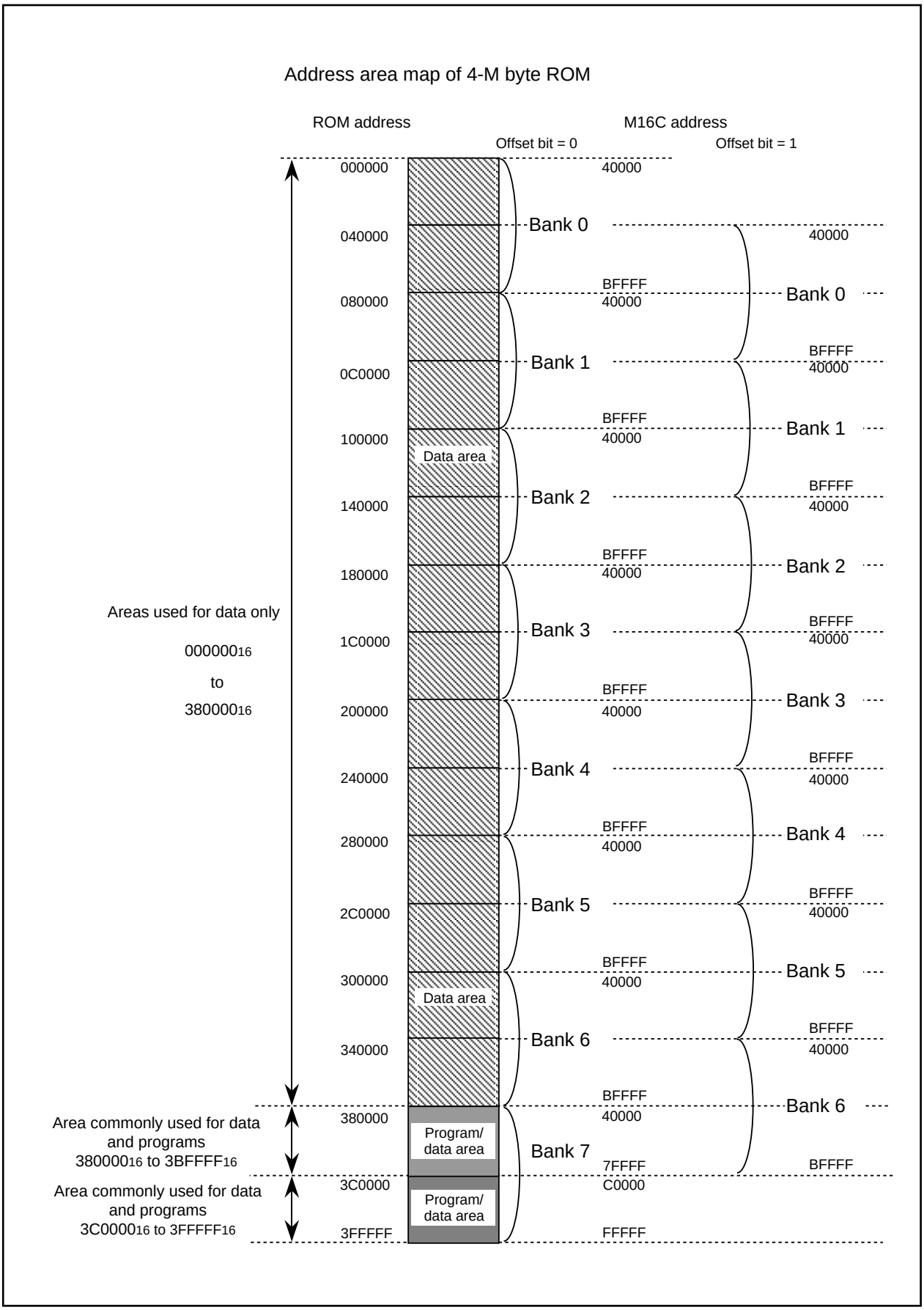

Figure 1.8.7. Relationship between addresses on 4-M byte ROM and those on M16C

Software Reset

Writing “1” to bit 3 of the processor mode register 0 (address 0004_{16}) applies a (software) reset to the microcomputer. A software reset has almost the same effect as a hardware reset. The contents of internal RAM are preserved.

Processor Mode

(1) Types of Processor Mode

One of three processor modes can be selected: single-chip mode, memory expansion mode, and microprocessor mode. The functions of some pins, the memory map, and the access space differ according to the selected processor mode.

But M16C/62T group is not guaranteed to operate in memory expansion and microprocessor modes.

- **Single-chip mode**

  In single-chip mode, only internal memory space (SFR, internal RAM, and internal ROM) can be accessed. Ports P0 to P10 can be used as programmable I/O ports or as I/O ports for the internal peripheral functions.

- **Memory expansion mode**

  In memory expansion mode, external memory can be accessed in addition to the internal memory space (SFR, internal RAM, and internal ROM).

  In this mode, some of the pins function as the address bus, the data bus, and as control signals. The number of pins assigned to these functions depends on the bus and register settings. (See “Bus Settings” for details.)

- **Microprocessor mode**

  In microprocessor mode, the SFR, internal RAM, and external memory space can be accessed. The internal ROM area cannot be accessed.

  In this mode, some of the pins function as the address bus, the data bus, and as control signals. The number of pins assigned to these functions depends on the bus and register settings. (See “Bus Settings” for details.)

(2) Setting Processor Modes

The processor mode is set using the CNV_{SS} pin and the processor mode bits (bits 1 and 0 at address 0004_{16}). Do not set the processor mode bits to “10_2”.

Regardless of the level of the CNV_{SS} pin, changing the processor mode bits selects the mode. Therefore, never change the processor mode bits when changing the contents of other bits. Also do not attempt to shift to or from the microprocessor mode within the program stored in the internal ROM area.

- **Applying V_{SS} to CNV_{SS} pin**

  The microcomputer begins operation in single-chip mode after being reset. Memory expansion mode is selected by writing “01_2” to the processor mode is selected bits.

- **Applying V_{CC} to CNV_{SS} pin**

  The microcomputer starts to operate in microprocessor mode after being reset.

Figure 1.9.1 shows the processor mode register 0 and 1.

Figure 1.10.1 shows the memory maps applicable for each of the modes when memory area dose not be expanded (normal mode).

Processor mode register 0 (Note 1)

b7	b6	b5	b4	b3	b2	b1	b0

Symbol	Address	When reset
PM0	0004_{16}	00_{16} (Note 2)

Bit symbol	Bit name	Function	R	W
PM00	Processor mode bit	b1 b0 0 0: Single-chip mode 0 1: Memory expansion mode 1 0: Inhibited 1 1: Microprocessor mode	○	○
PM01			○	○
PM02	R/W mode select bit	0 : $\overline{RD}$,$\overline{BHE}$,$\overline{WR}$ 1 : $\overline{RD}$,$\overline{WRH}$,$\overline{WRL}$	○	○
PM03	Software reset bit	The device is reset when this bit is set to “1”. The value of this bit is “0” when read.	○	○
PM04	Multiplexed bus space select bit	b5 b4 0 0 : Multiplexed bus is not used 0 1 : Allocated to CS2 space 1 0 : Allocated to CS1 space 1 1 : Allocated to entire space (Note4)	○	○
PM05			○	○
PM06	Port $P4_0$ to $P4_3$ function select bit (Note 3)	0 : Address output 1 : Port function (Address is not output)	○	○
PM07	BCLK output disable bit	0 : BCLK is output 1 : BCLK is not output (Pin is left floating)	○	○

Note 1: Set bit 1 of the protect register (address $000A_{16}$) to “1” when writing new values to this register.
Note 2: If the V_{CC} voltage is applied to the CNV_{SS}, the value of this register when reset is 03_{16}.
(PM00 and PM01 both are set to “1”.)
Note 3: Valid in microprocessor and memory expansion modes.
Note 4: If the entire space is of multiplexed bus in memory expansion mode, choose an 8-bit width.
The processor operates using the separate bus after reset is revoked, so the entire space multiplexed bus cannot be chosen in microprocessor mode. The higher-order address becomes a port if the entire space multiplexed bus is chosen, so only 256 bytes can be used in each chip select.
Note 5: The M16C/62T group is not guaranteed to operate in memory expansion and microprocessor modes.

Processor mode register 1 (Note 1)

b7	b6	b5	b4	b3	b2	b1	b0
	0			0	X	X	0

Symbol	Address	When reset
PM1	0005_{16}	$00000XX0_2$

Bit symbol	Bit name	Function	R	W
Reserved bit		Must always be set to “0”	○	○
Nothing is assigned. In an attempt to write to these bits, write “0”. The value, if read, turns out to be indeterminate.			—	—
Reserved bit		Must always be set to “0”	—	○
PM14	Memory area expansion bit (Note 2)	b5 b4 0 0 : Normal mode (Do not expand) 0 1 : Inhibited 1 0 : Memory area expansion mode 1 1 1 : Memory area expansion mode 2	○	○
PM15			○	○
Reserved bit		Must always be set to “0”	○	○
PM17	Wait bit	0 : No wait state 1 : Wait state inserted	○	○

Note 1: Set bit 1 of the protect register (address $000A_{16}$) to “1” when writing new values to this register.
Note 2: With the processor running in memory expansion mode or in microprocessor mode, setting this bit provides the means of expanding the external memory area. (Normal mode: up to 1M byte, expansion mode 1: up to 1.2 M bytes, expansion mode 2: up to 4M bytes)
For details, see “Memory space expansion functions”.
Note 3: The M16C/62T group is not guaranteed to operate in memory expansion and microprocessor modes.

Figure 1.9.1. Processor mode register 0 and 1

Processor Mode

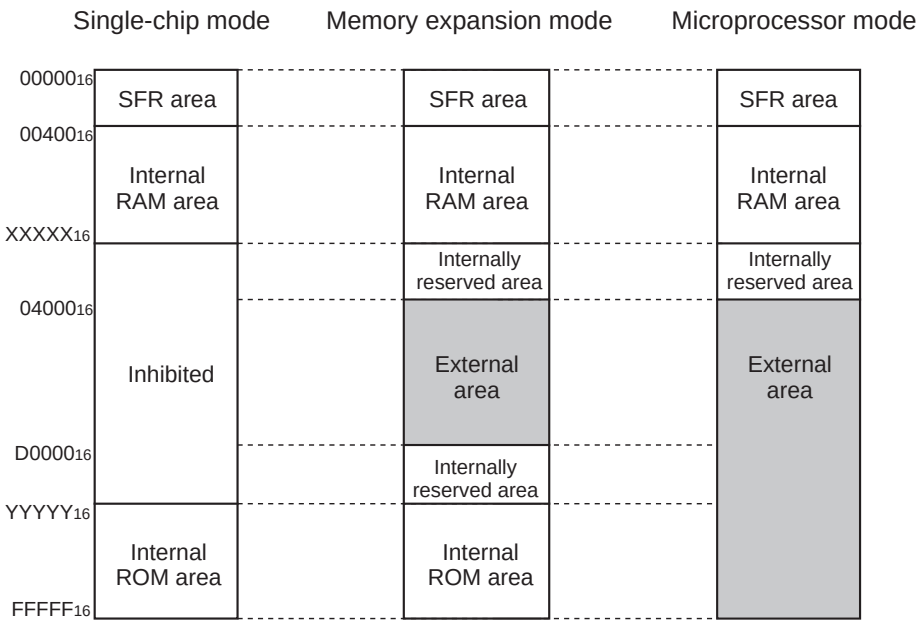

Type No.	XXXXX16	YYYYY16
M30623M4T-XXXGP	00FFF16	F800016
M30622M8T/M8V-XXXFP	013FF16	F000016
M30623M8T/M8V-XXXGP		
M30622MCT/MCV-XXXFP	017FF16	E000016
M30623MCT/MCV-XXXGP		

External area : Accessing this area allows the user to access a device connected externally to the microcomputer.

Note: The M16C/62T group is not guaranteed to operate in memory expansion and microprocessor modes.

Figure 1.10.1. Memory maps in each processor mode (without memeory area expansion, normal mode)

Bus Settings

The BYTE pin and bits 4 to 6 of the processor mode register 0 (address 0004_{16}) are used to change the bus settings. In M30623(80-pin package), the BYTE signal has no external pin, and is internally connected to the CNV_{SS} signal. Accordingly, the external data bus width can be used only 8 bits.
M16C/62T group is not guaranteed to operate in memory expansion and microprocessor modes.
Table 1.11.1 shows the factors used to change the bus settings.

Table 1.11.1. Factors for switching bus settings

Bus setting	Switching factor
Switching external address bus width	Bit 6 of processor mode register 0
Switching external data bus width	BYTE pin
Switching between separate and multiplex bus	Bits 4 and 5 of processor mode register 0

Note 1: In M30623(80-pin package), the external data bus width cannot be switched (be fixed 8 bits).

(1) Selecting external address bus width

The address bus width for external output in the 1M bytes of address space can be set to 16 bits (64K bytes address space) or 20 bits (1M bytes address space). When bit 6 of the processor mode register 0 is set to “1”, the external address bus width is set to 16 bits, and P2 and P3 become part of the address bus. $P4_0$ to $P4_3$ can be used as programmable I/O ports. When bit 6 of processor mode register 0 is set to “0”, the external address bus width is set to 20 bits, and P2, P3, and $P4_0$ to $P4_3$ become part of the address bus.

(2) Selecting external data bus width

The external data bus width can be set to 8 or 16 bits. (Note, however, that only the separate bus can be set.) When the BYTE pin is “L”, the bus width is set to 16 bits; when “H”, it is set to 8 bits. (The internal bus width is permanently set to 16 bits.) While operating, fix the BYTE pin either to “H” or to “L”.

(3) Selecting separate/multiplex bus

The bus format can be set to multiplex or separate bus using bits 4 and 5 of the processor mode register 0.

- **Separate bus**
  In this mode, the data and address are input and output separately. The data bus can be set using the BYTE pin to be 8 or 16 bits. When the BYTE pin is “H”, the data bus is set to 8 bits and P0 functions as the data bus and P1 as a programmable I/O port. When the BYTE pin is “L”, the data bus is set to 16 bits and P0 and P1 are both used for the data bus.
  When the separate bus is used for access, a software wait can be selected.
- **Multiplex bus**
  In this mode, data and address I/O are time multiplexed. With an 8-bit data bus selected (BYTE pin = “H”), the 8 bits from D_0 to D_7 are multiplexed with A_0 to A_7.
  With a 16-bit data bus selected (BYTE pin = “L”), the 8 bits from D_0 to D_7 are multiplexed with A_1 to A_8. D_8 to D_{15} are not multiplexed. In this case, the external devices connected to the multiplexed bus are mapped to the microcomputer’s even addresses (every 2nd address). To access these external devices, access the even addresses as bytes.
  The ALE signal latches the address. It is output from $P5_6$.
  Before using the multiplex bus for access, be sure to insert a software wait.
  If the entire space is of multiplexed bus in memory expansion mode, choose an 8-bit width.
  The processor operates using the separate bus after reset is revoked, so the entire space multiplexed bus cannot be chosen in microprocessor mode.
  The higher-order address becomes a port if the entire space multiplexed bus is chosen, so only 256 bytes can be used in each chip select.

Table 1.11.2. Pin functions for each processor mode

Processor mode	Single-chip mode	Memory expansion / microprocessor modes				Memory expansion mode (Note 1)
Multiplexed bus space select bit		"01", "10" (Either CS1 or CS2 is for multiplexed bus and others are for separate bus)		"00" (separate bus)		"11" (Note 2) (multiplexed bus for the entire space)
Data bus width BYTE pin level		8 bits "H"	16 bits "L"	8 bits "H"	16 bits "L"	8 bits "H"
$P0_0$ to $P0_7$	I/O port	Data bus	Data bus	Data bus	Data bus	I/O port
$P1_0$ to $P1_7$	I/O port	I/O port	Data bus	I/O port	Data bus	I/O port
$P2_0$	I/O port	Address bus/ data bus (Note 3)	Address bus	Address bus	Address bus	Address bus /data bus
$P2_1$ to $P2_7$	I/O port	Address bus/ data bus (Note 3)	Address bus/ data bus (Note 3)	Address bus	Address bus	Address bus /data bus
$P3_0$	I/O port	Address bus	Address bus/ data bus (Note 3)	Address bus	Address bus	A_8/D_7
$P3_1$ to $P3_7$	I/O port	Address bus	Address bus	Address bus	Address bus	I/O port
$P4_0$ to $P4_3$ Port $P4_0$ to $P4_3$ function select bit = 1	I/O port	I/O port	I/O port	I/O port	I/O port	I/O port
$P4_0$ to $P4_3$ Port $P4_0$ to $P4_3$ function select bit = 0	I/O port	Address bus	Address bus	Address bus	Address bus	I/O port
$P4_4$ to $P4_7$	I/O port	$\overline{CS}$ (chip select) or programmable I/O port (For details, refer to "Bus control".)				
$P5_0$ to $P5_3$	I/O port	Outputs $\overline{RD}$, $\overline{WRL}$, $\overline{WRH}$, and BCLK or $\overline{RD}$, $\overline{BHE}$, $\overline{WR}$, and BCLK (For details, refer to "Bus control".)				
$P5_4$	I/O port	$\overline{HLDA}$	$\overline{HLDA}$	$\overline{HLDA}$	$\overline{HLDA}$	$\overline{HLDA}$
$P5_5$	I/O port	$\overline{HOLD}$	$\overline{HOLD}$	$\overline{HOLD}$	$\overline{HOLD}$	$\overline{HOLD}$
$P5_6$	I/O port	ALE	ALE	ALE	ALE	ALE
$P5_7$	I/O port	$\overline{RDY}$	$\overline{RDY}$	$\overline{RDY}$	$\overline{RDY}$	$\overline{RDY}$

Note 1: In M30623(80-pin package), set the data bus width to 8 bits by any of the following operations, to transfer the microcomputer to memory expansion mode correctly.
- At reset, input "H" to the CNV_{SS} (BYTE) pin to start the program in microprocessor mode. Then, set the processor mode bit to memory expansion mode.
- At reset, input "L" to the CNV_{SS} (BYTE) pin to start the program in single-chip mode, and input "H" to this pin. Then, set the processor mode bit to memory expansion mode.

Note 2: If the entire space is of multiplexed bus in memory expansion mode, choose an 8-bit width. The processor operates using the separate bus after reset is revoked, so the entire space multiplexed bus cannot be chosen in microprocessor mode.
The higher-order address becomes a port if the entire space multiplexed bus is chosen, so only 256 bytes can be used in each chip select.

Note 3: Address bus when in separate bus mode.

Note 4: In M30623(80-pin package), P1, $P4_4$ to $P4_7$ have no corresponding external pin.

Note 5: M16C/62T group is not guaranteed to operate in memory expansion and microprocessor modes.

Bus Control

The following explains the signals required for accessing external devices and software waits. The signals required for accessing the external devices are valid when the processor mode is set to memory expansion mode and microprocessor mode. The software waits are valid in all processor modes.

M30623(80-pin package), in which the BYTE pin is connected to the CNVSS pin, and the external data bus width can be used 8 bits.

M16C/62T group is not guaranteed to operate in memory expansion and microprocessor modes.

(1) Address bus/data bus

The address bus consists of the 20 pins A_0 to A_{19} for accessing the 1M bytes of address space.

The data bus consists of the pins for data I/O. When the BYTE pin is "H", the 8 ports D_0 to D_7 function as the data bus. When BYTE is "L", the 16 ports D_0 to D_{15} function as the data bus.

When a change is made from single-chip mode to memory expansion mode, the value of the address bus is undefined until external memory is accessed.

(2) Chip select signalIn (In M30623(80-pin package), the chip select signals have no corresponding external pin.)

The chip select signal is output using the same pins as $P4_4$ to $P4_7$. Bits 0 to 3 of the chip select control register (address 0008_{16}) set each pin to function as a port or to output the chip select signal. The chip select control register is valid in memory expansion mode and microprocessor mode. In single-chip mode, $P4_4$ to $P4_7$ function as programmable I/O ports regardless of the value in the chip select control register.

In microprocessor mode, only $\overline{CS0}$ outputs the chip select signal after the reset state has been cancelled. $\overline{CS1}$ to $\overline{CS3}$ function as input ports. Figure 1.12.1 shows the chip select control register.

The chip select signal can be used to split the external area into as many as four blocks. Tables 1.12.1 and 1.12.2 show the external memory areas specified using the chip select signal.

Table 1.12.1. External areas specified by the chip select signals

Memory space expansion mode		Processor mode	Chip select signal			
			$\overline{CS0}$	$\overline{CS1}$	$\overline{CS2}$	$\overline{CS3}$
Specified address range	Normal mode (PM15,14=0,0)	Memory expansion mode	30000_{16} to $CFFFF_{16}$ (640K bytes)	28000_{16} to $2FFFF_{16}$ (32K bytes)	08000_{16} to $27FFF_{16}$ (128K bytes)	04000_{16} to $07FFF_{16}$ (16K bytes)
		Microprocessor mode	30000_{16} to $FFFFF_{16}$ (832K bytes)			
	Expansion mode 1 (PM15,14=1,0)	Memory expansion mode	04000_{16} to $CFFFF_{16}$ (816K bytes)			
		Microprocessor mode	04000_{16} to $FFFFF_{16}$ (1008K bytes)			
	Expansion mode 2 (PM15,14=1,1)	Memory expansion mode	40000_{16} to $BFFFF_{16}$ (512K bytes × 7 + 256K bytes)	28000_{16} to $3FFFF_{16}$ (96K bytes)		
		Microprocessor mode	40000_{16} to $FFFFF_{16}$ (512K bytes × 8)			

Note 1: In M30623(80-pin package), the chip select signals have no corresponding external pin.

Note 2: The M16C/62T Group is not guaranteed to operate in memory expansion and microprocessor modes.

Chip select control register

b7	b6	b5	b4	b3	b2	b1	b0

Symbol	Address	When reset
CSR	0008_{16}	01_{16}

Bit symbol	Bit name	Function	R	W
CS0	$\overline{CS0}$ output enable bit	0 : Chip select output disabled (Normal port pin) 1 : Chip select output enabled	○	○
CS1	$\overline{CS1}$ output enable bit		○	○
CS2	$\overline{CS2}$ output enable bit		○	○
CS3	$\overline{CS3}$ output enable bit		○	○
CS0W	$\overline{CS0}$ wait bit	0 : Wait state inserted 1 : No wait state	○	○
CS1W	$\overline{CS1}$ wait bit		○	○
CS2W	$\overline{CS2}$ wait bit		○	○
CS3W	$\overline{CS3}$ wait bit		○	○

Note: In M30623(80-pin package), the chip select signals has no corresponding external pin. So, this register is invalid.

Figure 1.12.1. Chip select control register

(3) Read/write signals

With a 16-bit data bus (BYTE pin =“L”), bit 2 of the processor mode register 0 (address 0004_{16}) select the combinations of $\overline{RD}$, $\overline{BHE}$, and $\overline{WR}$ signals or $\overline{RD}$, $\overline{WRL}$, and $\overline{WRH}$ signals. With an 8-bit data bus (BYTE pin = “H”), use the combination of $\overline{RD}$, $\overline{WR}$, and $\overline{BHE}$ signals. (Set bit 2 of the processor mode register 0 (address 0004_{16}) to “0”.) Tables 1.12.2 and 1.12.3 show the operation of these signals.

After a reset has been cancelled, the combination of $\overline{RD}$, $\overline{WR}$, and $\overline{BHE}$ signals is automatically selected. When switching to the $\overline{RD}$, $\overline{WRL}$, and $\overline{WRH}$ combination, do not write to external memory until bit 2 of the processor mode register 0 (address 0004_{16}) has been set (Note 1).

Note 1: Before attempting to change the contents of the processor mode register 0, set bit 1 of the protect register (address $000A_{16}$) to “1”.

Table 1.12.2. Operation of $\overline{RD}$, $\overline{WRL}$, and $\overline{WRH}$ signals

Data bus width	$\overline{RD}$	$\overline{WRL}$	$\overline{WRH}$	Status of external data bus
16-bit (BYTE = “L”)	L	H	H	Read data
	H	L	H	Write 1 byte of data to even address
	H	H	L	Write 1 byte of data to odd address
	H	L	L	Write data to both even and odd addresses

Table 1.12.3. Operation of $\overline{RD}$, $\overline{WR}$, and $\overline{BHE}$ signals

Data bus width	$\overline{RD}$	$\overline{WR}$	$\overline{BHE}$	A0	Status of external data bus
16-bit (BYTE = “L”)	H	L	L	H	Write 1 byte of data to odd address
	L	H	L	H	Read 1 byte of data from odd address
	H	L	H	L	Write 1 byte of data to even address
	L	H	H	L	Read 1 byte of data from even address
	H	L	L	L	Write data to both even and odd addresses
	L	H	L	L	Read data from both even and odd addresses
8-bit (BYTE = “H”)	H	L	Not used	H / L	Write 1 byte of data
	L	H	Not used	H / L	Read 1 byte of data

Note 1: M30623(80-pin package) can operate only when BYTE = ‘‘H’’.

(4) ALE signal

The ALE signal latches the address when accessing the multiplex bus space. Latch the address when the ALE signal falls.

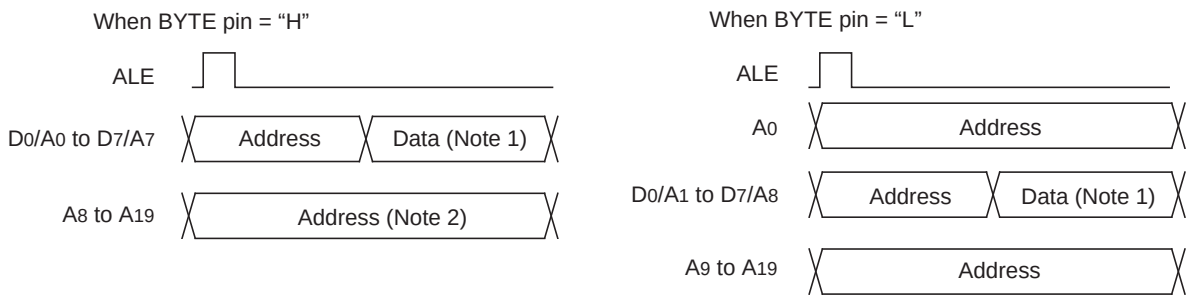

Note 1: Floating when reading.
Note 2: When multiplexed bus for the entire space is selected, these are I/O ports.
Note 3: In M30623 (80-pin package), $P1_0$ to $P1_7$ which are in common with D8 to D15 are available. So, M30623 (80-pin package) can operate only when BYTE pin = "H" (the width of external data bus is 16-bit).

Figure 1.12.2. ALE signal and address/data bus

(5) The $\overline{RDY}$ signal

$\overline{RDY}$ is a signal that facilitates access to an external device that requires long access time. As shown in Figure 1.12.3, if an "L" is being input to the $\overline{RDY}$ at the BCLK falling edge, the bus turns to the wait state. If an "H" is being input to the $\overline{RDY}$ pin at the BCLK falling edge, the bus cancels the wait state. Table 1.12.4 shows the state of the microcomputer with the bus in the wait state, and Figure 1.12.3 shows an example in which the $\overline{RD}$ signal is prolonged by the $\overline{RDY}$ signal.

The $\overline{RDY}$ signal is valid when accessing the external area during the bus cycle in which bits 4 to 7 of the chip select control register (address 0008_{16}) are set to "0". The $\overline{RDY}$ signal is invalid when setting "1" to all bits 4 to 7 of the chip select control register (address 0008_{16}), but the $\overline{RDY}$ pin should be treated as properly as in non-using.

Table 1.12.4. Microcomputer status in ready state (Note 1)

Item	Status
Oscillation	On
R/$\overline{W}$ signal, address bus, data bus, $\overline{CS}$ ALE signal, $\overline{HLDA}$, programmable I/O ports	Maintain status when $\overline{RDY}$ signal received
Internal peripheral circuits	On

Note 1: The $\overline{RDY}$ signal cannot be received immediately prior to a software wait.

Note 2: In M30623(80-pin package), $\overline{CS}$ signals have no corresponding external pin.

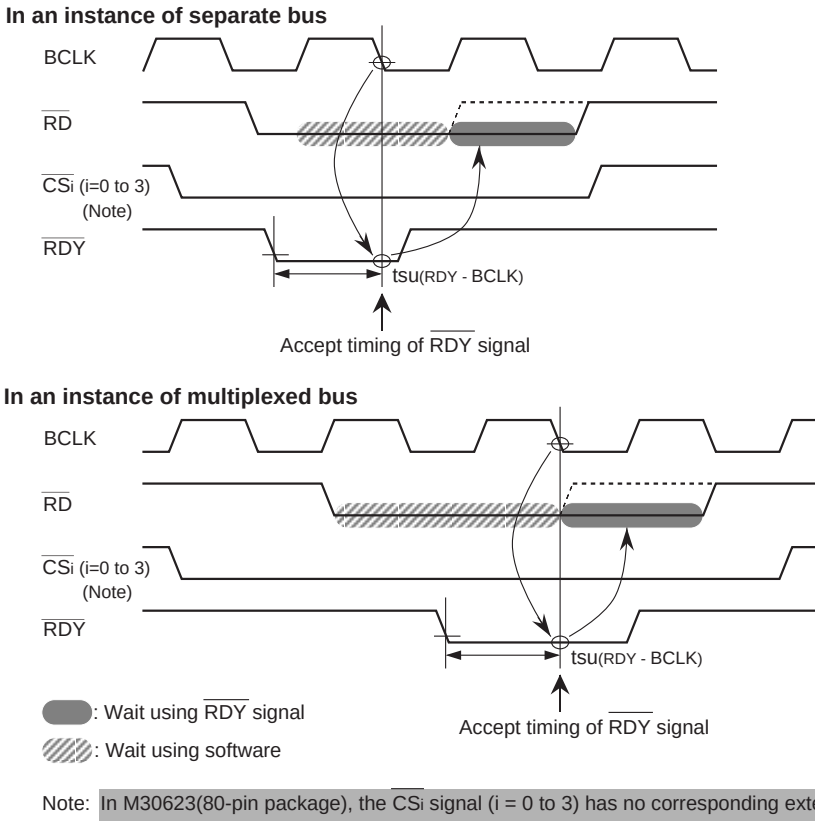

Figure 1.12.3. Example of RD signal extended by RDY signal

(6) Hold signal

The hold signal is used to transfer the bus privileges from the CPU to the external circuits. Inputting “L” to the HOLD pin places the microcomputer in the hold state at the end of the current bus access. This status is maintained and “L” is output from the HLDA pin as long as “L” is input to the HOLD pin. Table 1.12.5 shows the microcomputer status in the hold state.

Bus-using priorities are given to HOLD, DMAC, and CPU in order of decreasing precedence.

HOLD > DMAC > CPU

Figure 1.12.4. Bus-using priorities

Table 1.12.5. Microcomputer status in hold state

Item		Status
Oscillation		ON
R/W signal, address bus, data bus, CS, BHE		Floating
Programmable I/O ports	P0, P1, P2, P3, P4, P5	Floating
	P6, P7, P8, P9, P10	Maintains status when hold signal is received
HLDA		Output “L”
Internal peripheral circuits		ON (but watchdog timer stops)
ALE signal		Undefined

Note 1: In M30623(80-pin package), P1, $P4_4$ to $P4_7$(CS0 to CS3) and $P7_2$ to $P7_5$, $P9_1$ have no corresponding external pin, but are internally the above conditions.

(7) External bus status when the internal area is accessed

Table 1.12.6 shows the external bus status when the internal area is accessed.

Table 1.12.6. External bus status when the internal area is accessed

Item		SFR accessed	Internal ROM/RAM accessed
Address bus		Address output	Maintain status before accessed address of external area
Data bus	When read	Floating	Floating
	When write	Output data	Undefined
$\overline{RD}$, $\overline{WR}$, $\overline{WRL}$, $\overline{WRH}$		$\overline{RD}$, $\overline{WR}$, $\overline{WRL}$, $\overline{WRH}$ output	Output "H"
$\overline{BHE}$		$\overline{BHE}$ output	Maintain status before accessed status of external area
$\overline{CS}$		Output "H"	Output "H"
ALE		Output "L"	Output "L"

Note 1: In M30623(80-pin package), $\overline{CS}$ signals have no corresponding external pin.

(8) BCLK output

The user can choose the BCLK output by use of bit 7 of processor mode register 0 (0004_{16}) (Note). When set to “1”, the output floating.

Note: Before attempting to change the contents of the processor mode register 0, set bit 1 of the protect register (address $000A_{16}$) to “1”.

(9) Software wait

A software wait can be inserted by setting the wait bit (bit 7) of the processor mode register 1 (address 0005_{16}) (Note) and bits 4 to 7 of the chip select control register (address 0008_{16}).

A software wait is inserted in the internal ROM/RAM area and in the external memory area by setting the wait bit of the processor mode register 1. When set to “0”, each bus cycle is executed in one BCLK cycle. When set to “1”, each bus cycle is executed in two or three BCLK cycles. After the microcomputer has been reset, this bit defaults to “0”. When set to “1”, a wait is applied to all memory areas (two or three BCLK cycles), regardless of the contents of bits 4 to 7 of the chip select control register. Set this bit after referring to the recommended operating conditions (main clock input oscillation frequency) of the electric characteristics. However, when the user is using the RDY signal, the relevant bit in the chip select control register's bits 4 to 7 must be set to “0”.

When the wait bit of the processor mode register 1 is “0”, software waits can be set independently for each of the 4 areas selected using the chip select signal. Bits 4 to 7 of the chip select control register correspond to chip selects $\overline{CS0}$ to $\overline{CS3}$. When one of these bits is set to “1”, the bus cycle is executed in one BCLK cycle. When set to “0”, the bus cycle is executed in two or three BCLK cycles. These bits default to “0” after the microcomputer has been reset.

The SFR area is always accessed in two BCLK cycles regardless of the setting of these control bits. Also, insert a software wait if using the multiplex bus to access the external memory area.

Table 1.12.7 shows the software wait and bus cycles. Figure 1.12.5 shows example bus timing when using software waits.

Note 1: Before attempting to change the contents of the processor mode register 1, set bit 1 of the protect register (address $000A_{16}$) to “1”.

Note 2: In M30623(80-pin package), the chip select signals have no corresponding external pin.

Table 1.12.7. Software waits and bus cycles

Area	Bus status	Wait bit	Bits 4 to 7 of chip select control register	Bus cycle
SFR	———	Invalid	Invalid	2 BCLK cycles
Internal ROM/RAM	———	0	Invalid	1 BCLK cycle
	———	1	Invalid	2 BCLK cycles
External memory area	Separate bus	0	1	1 BCLK cycle
	Separate bus	0	0	2 BCLK cycles
	Separate bus	1	0 (Note)	2 BCLK cycles
	Multiplex bus	0	0	3 BCLK cycles
	Multiplex bus	1	0 (Note)	3 BCLK cycles

Note: When using the $\overline{RDY}$ signal, always set to “0”.

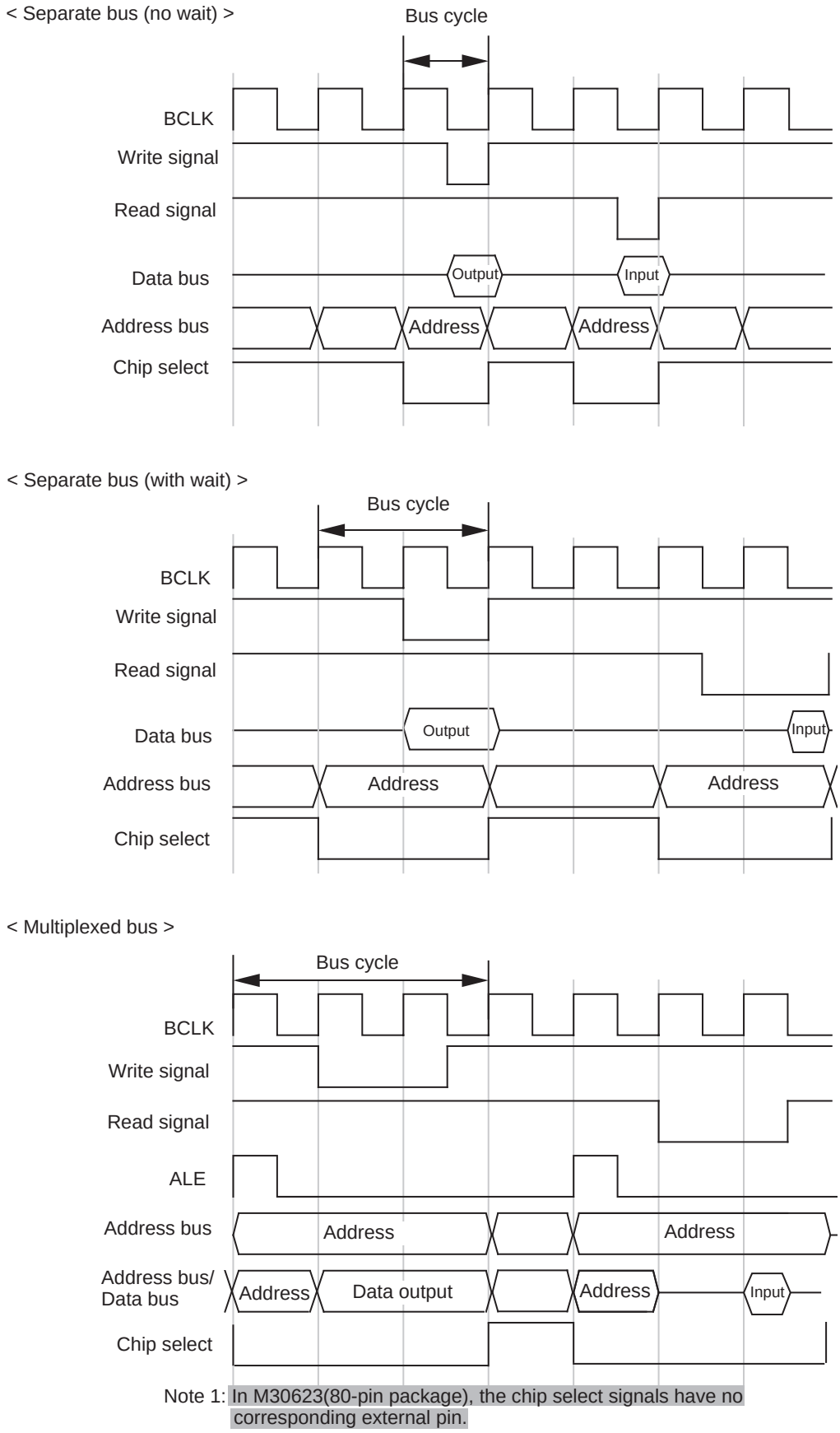

Note 1: In M30623(80-pin package), the chip select signals have no corresponding external pin.

Figure 1.12.5. Typical bus timings using software wait

Clock Generating Circuit

The clock generating circuit contains two oscillator circuits that supply the operating clock sources to the CPU and internal peripheral units.

Table 1.13.1. Main clock and sub clock generating circuits

	Main clock generating circuit	Sub clock generating circuit
Use of clock	• CPU's operating clock source • Internal peripheral units' operating clock source	• CPU's operating clock source • Timer A/B's count clock source
Usable oscillator	Ceramic or crystal oscillator	Crystal oscillator
Pins to connect oscillator	XIN, XOUT	XCIN, XCOUT
Oscillation stop/restart function	Available	Available
Oscillator status immediately after reset	Oscillating	Stopped
Other	Externally derived clock can be input	

Example of oscillator circuit

Figure 1.13.1 shows some examples of the main clock circuit, one using an oscillator connected to the circuit, and the other one using an externally derived clock for input. Figure 1.13.2 shows some examples of sub clock circuits, one using an oscillator connected to the circuit, and the other one using an externally derived clock for input. Circuit constants in Figures 1.13.1 and 1.13.2 vary with each oscillator used. Use the values recommended by the manufacturer of your oscillator.

Note: Insert a damping resistor if required. The resistance will vary depending on the oscillator and the oscillation drive capacity setting. Use the value recommended by the maker of the oscillator.
When the oscillation drive capacity is set to low, check that oscillation is stable.

Figure 1.13.1. Examples of main clock

Note: Insert a damping resistor if required. The resistance will vary depending on the oscillator and the oscillation drive capacity setting. Use the value recommended by the maker of the oscillator.
When the oscillation drive capacity is set to low, check that oscillation is stable.

Figure 1.13.2. Examples of sub clock

Clock Control

Figure 1.13.3 shows the block diagram of the clock generating circuit.

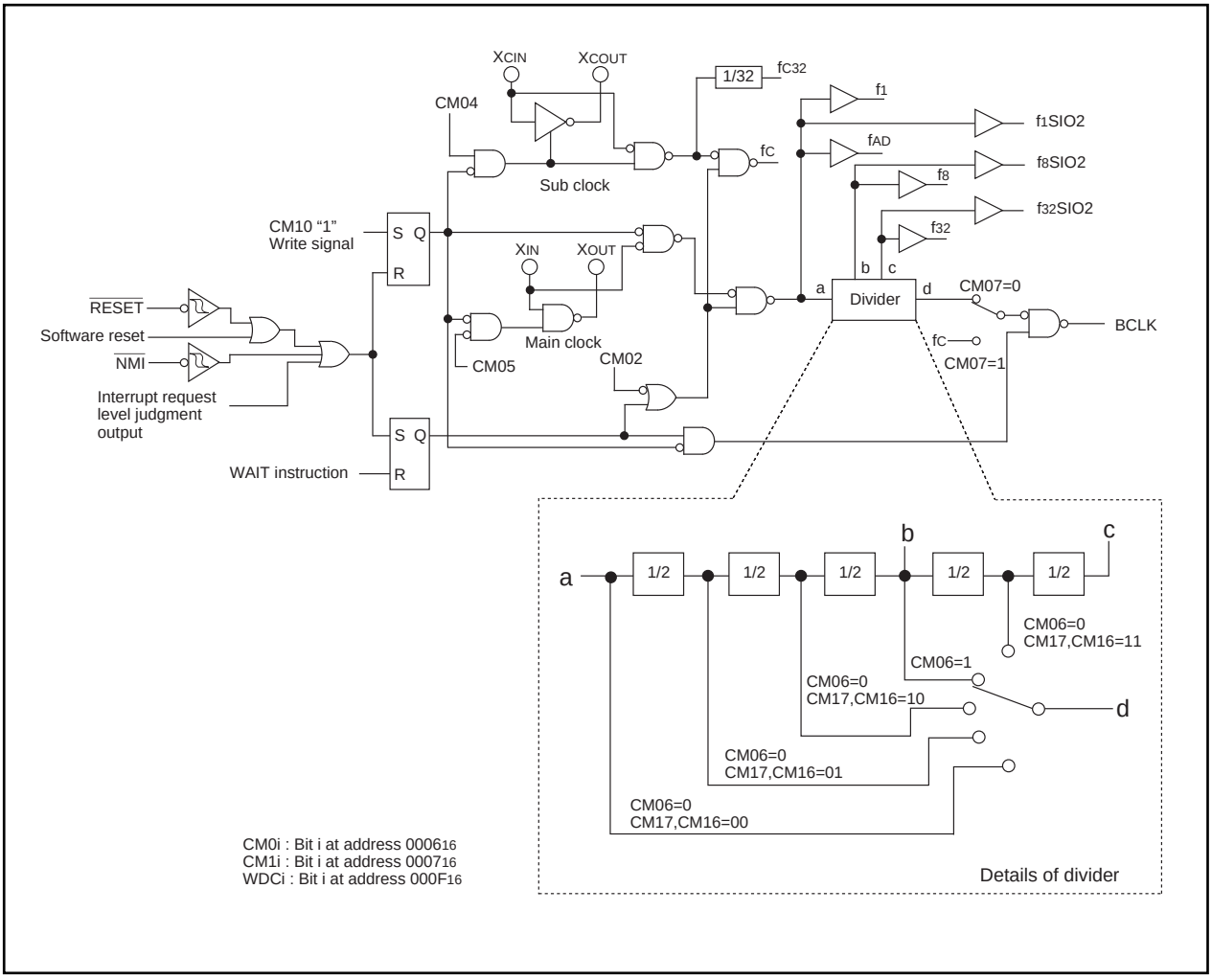

Figure 1.13.3. Clock generating circuit

The following paragraphs describes the clocks generated by the clock generating circuit.

(1) Main clock

The main clock is generated by the main clock oscillation circuit. After a reset, the clock is divided by 8 to the BCLK. The clock can be stopped using the main clock stop bit (bit 5 at address 0006_{16}). Stopping the clock reduces the power dissipation.

After the oscillation of the main clock oscillation circuit has stabilized, the drive capacity of the XOUT pin can be reduced using the XIN-XOUT drive capacity select bit (bit 5 at address 0007_{16}). Reducing the drive capacity of the XOUT pin reduces the power dissipation. This bit defaults to “1” when shifting to stop mode and after a reset.

(2) Sub clock

The sub clock is generated by the sub clock oscillation circuit. No sub clock is generated after a reset. After oscillation is started using the port Xc select bit (bit 4 at address 0006_{16}), the sub clock can be selected as the BCLK by using the system clock select bit (bit 7 at address 0006_{16}). However, be sure that the sub clock oscillation has fully stabilized before switching.

After the oscillation of the sub clock oscillation circuit has stabilized, the drive capacity of the XCOUT pin can be reduced using the XCIN-XCOUT drive capacity select bit (bit 3 at address 0006_{16}). Reducing the drive capacity of the XCOUT pin reduces the power dissipation. This bit changes to “1” when shifting to stop mode and at a reset.

(3) BCLK

The BCLK is the clock that drives the CPU, and is either the main clock or fc or is derived by dividing the main clock by 2, 4, 8, or 16. The BCLK is derived by dividing the main clock by 8 after a reset.

When shifting to stop mode, the main clock division select bit (bit 6 at 0006_{16}) is set to “1”.

(4) Peripheral function clock

- **f_1, f_8, f_{32}, f_{1SIO2}, f_{8SIO2}, f_{32SIO2}**

The clock for the peripheral devices is derived from the main clock or by dividing it by 8 or 32. The peripheral function clock is stopped by stopping the main clock or by setting the WAIT peripheral function clock stop bit (bit 2 at 0006_{16}) to “1” and then executing a WAIT instruction.

- **f_{AD}**

This clock has the same frequency as the main clock and is used for A-D conversion.

(5) f_{C32}

This clock is derived by dividing the sub clock by 32. It is used for the timer A and timer B counts.

(6) f_C

This clock has the same frequency as the sub clock. It is used for the BCLK and for the watchdog timer.

Figure 1.13.4 shows the system clock control registers 0 and 1.

System clock control register 0 (Note 1)

b7	b6	b5	b4	b3	b2	b1	b0

Symbol	Address	When reset
CM0	0006_{16}	48_{16}

Bit symbol	Bit name	Function	R	W
CM00	Clock output function select bit	b1 b0 0 0 : I/O port $P5_7$ 0 1 : f_C output 1 0 : f_8 output 1 1 : f_{32} output	○	○
CM01			○	○
CM02	WAIT peripheral function clock stop bit	0 : Do not stop f_1, f_8, f_{32} in wait mode 1 : Stop f_1, f_8, f_{32} in wait mode	○	○
CM03	X_{CIN}-X_{COUT} drive capacity select bit (Note 2)	0 : LOW 1 : HIGH	○	○
CM04	Port X_C select bit	0 : I/O port 1 : X_{CIN}-X_{COUT} generation	○	○
CM05	Main clock (X_{IN}-X_{OUT}) stop bit (Note 4) (Note 5)	0 : On 1 : Off	○	○
CM06	Main clock division select bit 0 (Note 2)	0 : CM16 and CM17 valid 1 : Division by 8 mode	○	○
CM07	System clock select bit (Note 6)	0 : X_{IN}, X_{OUT} 1 : X_{CIN}, X_{COUT}	○	○

Note 1: Set bit 0 of the protect register (address $000A_{16}$) to “1” before writing to this register.
Note 2: Changes to “1” when shiffing to stop mode.
Note 3: When entering power saving mode, main clock stops using this bit. When returning from stop mode and operating with X_{IN}, set this bit to “0”. When main clock oscillation is operating by itself, set system clock select bit (CM07) to “1” before setting this bit to “1”.
Note 4: When inputting external clock, only clock oscillation buffer is stopped and clock input is acceptable.
Note 5: If this bit is set to “1”, X_{OUT} turns “H”. The built-in feedback resistor remains ON, so X_{IN} turns pulled up to X_{OUT} (“H”) via the feedback resistor.
Note 6: Set port X_C select bit (CM04) to “1” before writing to this bit. The both bits can not be written at the same time.

System clock control register 1 (Note 1)

b7	b6	b5	b4	b3	b2	b1	b0
			0	0	0	0	

Symbol	Address	When reset
CM1	0007_{16}	20_{16}

Bit symbol	Bit name	Function	R	W
CM10	All clock stop control bit (Note4)	0 : Clock on 1 : All clocks off (stop mode)	○	○
Reserved bit		Always set to “0”	○	○
Reserved bit		Always set to “0”	○	○
Reserved bit		Always set to “0”	○	○
Reserved bit		Always set to “0”	○	○
CM15	X_{IN}-X_{OUT} drive capacity select bit (Note 2)	0 : LOW 1 : HIGH	○	○
CM16	Main clock division select bit 1 (Note 3)	b7 b6 0 0 : No division mode 0 1 : Division by 2 mode 1 0 : Division by 4 mode 1 1 : Division by 16 mode	○	○
CM17				

Note 1: Set bit 0 of the protect register (address $000A_{16}$) to “1” before writing to this register.
Note 2: Changes to “1” when shiffing to stop mode.
Note 3: Can be selected when bit 6 of the system clock control register 0 (address 0006_{16}) is “0”. If “1”, division mode is fixed at 8.
Note 4: If this bit is set to “1”, X_{OUT} turns “H”, and the built-in feedback resistor turns null.

Figure 1.13.4. Clock control registers 0 and 1

Clock Output

In single-chip mode, the clock output function select bits (bits 0 and 1 at address 0006_{16}) enable f_8, f_{32}, or fc to be output from the $P5_7$/CLK_{OUT} pin. When the WAIT peripheral function clock stop bit (bit 2 at address 0006_{16}) is set to "1", the output of f_8 and f_{32} stops when a WAIT instruction is executed.

Stop Mode

Writing "1" to the all-clock stop control bit (bit 0 at address 0007_{16}) stops all oscillation and the microcomputer enters stop mode. In stop mode, the content of the internal RAM is retained provided that V_{CC} remains above 2V.

Because the oscillation , BCLK, f_1 to f_{32}, f_{1SIO2} to f_{32SIO2}, f_C, f_{C32}, and f_{AD} stops in stop mode, peripheral functions such as the A-D converter and watchdog timer do not function. However, timer A and timer B operate provided that the event counter mode is set to an external pulse, and UARTi(i = 0 to 2) functions provided an external clock is selected. Table 1.13.2 shows the status of the ports in stop mode.

Stop mode is cancelled by a hardware reset or interrupt. If an interrupt is to be used to cancel stop mode, that interrupt must first have been enabled.

When shifting to stop mode, the main clock division select bit 0 (bit 6 at 0006_{16}) is set to "1".

Table 1.13.2. Port status during stop mode

Pin		Memory expansion mode Microprocessor mode	Single-chip mode
Address bus, data bus, $\overline{CS0}$ to $\overline{CS3}$		Retains status before stop mode	
$\overline{RD}$, $\overline{WR}$, $\overline{BHE}$, $\overline{WRL}$, $\overline{WRH}$		"H"	
$\overline{HLDA}$, BCLK	"H"		
ALE	"H"		
Port		Retains status before stop mode	Retains status before stop mode
CLK_{OUT}	When fc selected	Valid only in single-chip mode	"H"
	When f_8, f_{32} selected	Valid only in single-chip mode	Retains status before stop mode

Note 1: In M30623(80-pin package), $\overline{CS0}$ to $\overline{CS3}$ have no corresponding external pin, but are internally the above conditions.

Wait Mode

When a WAIT instruction is executed, the BCLK stops and the microcomputer enters the wait mode. In this mode, oscillation continues but the BCLK and watchdog timer stop. Writing “1” to the WAIT peripheral function clock stop bit and executing a WAIT instruction stops the clock being supplied to the internal peripheral functions, allowing power dissipation to be reduced. Table 1.13.3 shows the status of the ports in wait mode.

Wait mode is cancelled by a hardware reset or interrupt. If an interrupt is used to cancel wait mode, the microcomputer restarts using as BCLK, the clock that had been selected when the WAIT instruction was executed.

Table 1.13.3. Port status during wait mode

Pin		Memory expansion mode Microprocessor mode	Single-chip mode
Address bus, data bus, $\overline{CS0}$ to $\overline{CS3}$		Retains status before wait mode	
$\overline{RD}$, $\overline{WR}$, $\overline{BHE}$, $\overline{WRL}$, $\overline{WRH}$		“H”	
$\overline{HLDA}$,BCLK		“H”	
ALE		“H”	
Port		Retains status before wait mode	Retains status before wait mode
CLKOUT	When fC selected	Valid only in single-chip mode	Does not stop
	When f8, f32 selected	Valid only in single-chip mode	Does not stop when the WAIT peripheral function clock stop bit is “0”. When the WAIT peripheral function clock stop bit is “1”, the status immediately prior to entering wait mode is maintained.

Note 1: In M30623(80-pin package), $\overline{CS0}$ to $\overline{CS3}$ have no corresponding external pin, but are internally the above conditions.

Status Transition of BCLK

Power dissipation can be reduced and low-voltage operation achieved by changing the count source for BCLK. Table 1.13.4 shows the operating modes corresponding to the settings of system clock control registers 0 and 1.

After a reset, operation defaults to division by 8 mode. When shifting to stop mode, the main clock division select bit 0 (bit 6 at address 0006_{16}) is set to “1”. The following shows the operational modes of BCLK.

(1) Division by 2 mode

The main clock is divided by 2 to obtain the BCLK.

(2) Division by 4 mode

The main clock is divided by 4 to obtain the BCLK.

(3) Division by 8 mode

The main clock is divided by 8 to obtain the BCLK. Note that oscillation of the main clock must have stabilized before transferring from this mode to another mode.

(4) Division by 16 mode

The main clock is divided by 16 to obtain the BCLK.

(5) No-division mode

The main clock is used as the BCLK.

(6) Low-speed mode

f_C is used as the BCLK. Note that oscillation of both the main and sub clocks must have stabilized before transferring from this mode to another or vice versa. At least 2 to 3 seconds are required after the sub clock starts. Therefore, the program must be written to wait until this clock has stabilized immediately after powering up and after stop mode is cancelled.

(7) Low power dissipation mode

f_C is the BCLK and the main clock is stopped.

Table 1.13.4. Operating modes dictated by settings of system clock control registers 0 and 1

CM17	CM16	CM07	CM06	CM05	CM04	Operating mode of BCLK
0	1	0	0	0	Invalid	Division by 2 mode
1	0	0	0	0	Invalid	Division by 4 mode
Invalid	Invalid	0	1	0	Invalid	Division by 8 mode
1	1	0	0	0	Invalid	Division by 16 mode
0	0	0	0	0	Invalid	No-division mode
Invalid	Invalid	1	Invalid	0	1	Low-speed mode
Invalid	Invalid	1	Invalid	1	1	Low power dissipation mode

Power control

The following is a description of the three available power control modes:

Modes

Power control is available in three modes.

(a) Normal operation mode

- **High-speed mode**
  Divide-by-1 frequency of the main clock becomes the BCLK. The CPU operates with the internal clock selected. Each peripheral function operates according to its assigned clock.

- **Medium-speed mode**
  Divide-by-2, divide-by-4, divide-by-8, or divide-by-16 frequency of the main clock becomes the BCLK. The CPU operates according to the internal clock selected. Each peripheral function operates according to its assigned clock.

- **Low-speed mode**
  fc becomes the BCLK. The CPU operates according to the fc clock. The fc clock is supplied by the secondary clock. Each peripheral function operates according to its assigned clock.

- **Low power consumption mode**
  The main clock operating in low-speed mode is stopped. The CPU operates according to the fc clock. The fc clock is supplied by the secondary clock. The only peripheral functions that operate are those with the sub-clock selected as the count source.

(b) Wait mode

The CPU operation is stopped. The oscillators do not stop.

(c) Stop mode

All oscillators stop. The CPU and all built-in peripheral functions stop. This mode, among the three modes listed here, is the most effective in decreasing power consumption.

Figure 1.13.5 is the state transition diagram of the above modes.

Transition of stop mode, wait mode

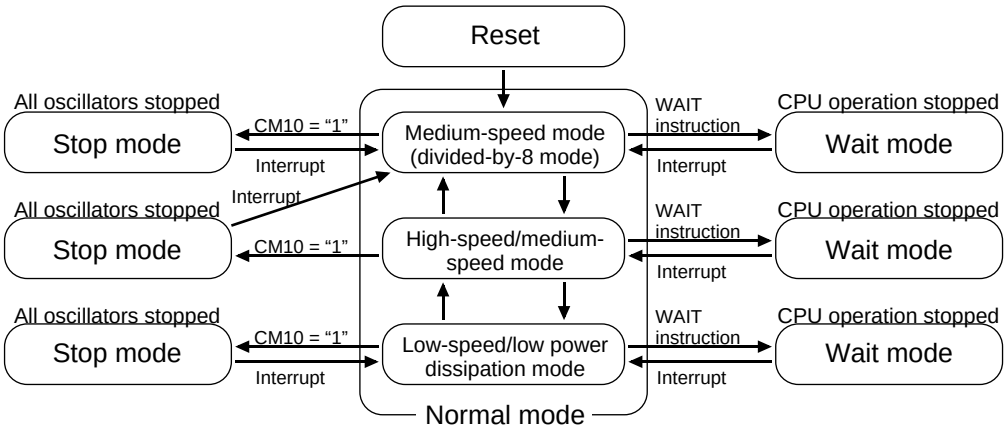

(Refer to the following for the transition of normal mode.)

Transition of normal mode

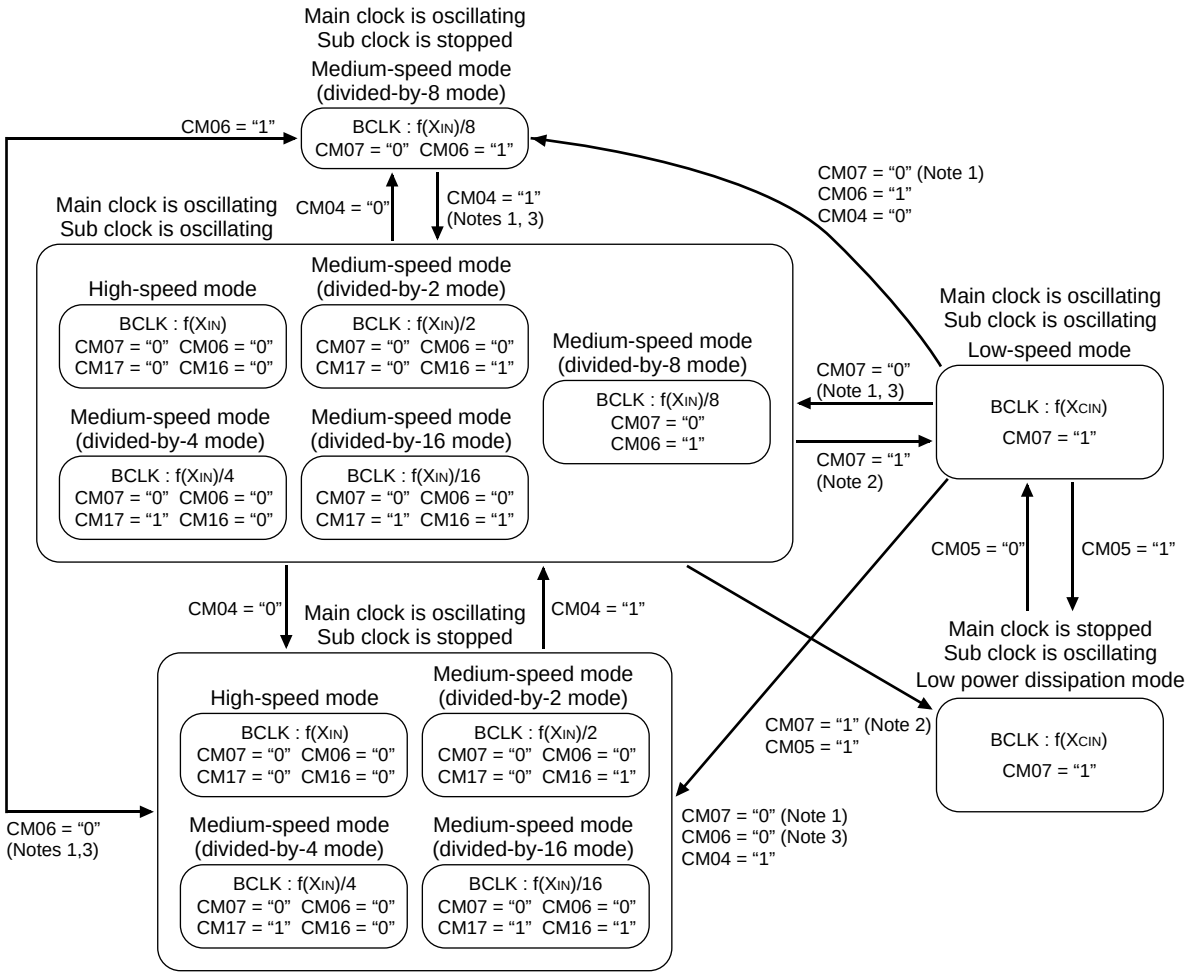

Note 1: Switch clock after oscillation of main clock is sufficiently stable.
Note 2: Switch clock after oscillation of sub clock is sufficiently stable.
Note 3: Change CM06 after changing CM17 and CM16.
Note 4: Transit in accordance with arrow.

Figure 1.13.5. State transition diagram of Power control mode

Protection

The protection function is provided so that the values in important registers cannot be changed in the event that the program runs out of control. Figure 1.13.6 shows the protect register. The values in the processor mode register 0 (address 0004_{16}), processor mode register 1 (address 0005_{16}), system clock control register 0 (address 0006_{16}), system clock control register 1 (address 0007_{16}), port P9 direction register (address $03F3_{16}$) , SI/O3 control register (address 0362_{16}) and SI/O4 control register (address 0366_{16}) can only be changed when the respective bit in the protect register is set to “1”. Therefore, important outputs can be allocated to port P9.

If, after “1” (write-enabled) has been written to the port P9 direction register and SI/Oi control register (i=3,4) write-enable bit (bit 2 at address $000A_{16}$), a value is written to any address, the bit automatically reverts to “0” (write-inhibited). However, the system clock control registers 0 and 1 write-enable bit (bit 0 at $000A_{16}$) and processor mode register 0 and 1 write-enable bit (bit 1 at $000A_{16}$) do not automatically return to “0” after a value has been written to an address. The program must therefore be written to return these bits to “0”.

Protect register

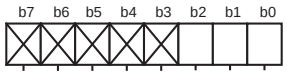

Symbol	Address	When reset
PRCR	$000A_{16}$	$XXXXX000_2$

Bit symbol	Bit name	Function	R	W
PRC0	Enables writing to system clock control registers 0 and 1 (addresses 0006_{16} and 0007_{16})	0 : Write-inhibited 1 : Write-enabled	○	○
PRC1	Enables writing to processor mode registers 0 and 1 (addresses 0004_{16} and 0005_{16})	0 : Write-inhibited 1 : Write-enabled	○	○
PRC2	Enables writing to port P9 direction register (address $03F3_{16}$) (Note 1)	0 : Write-inhibited 1 : Write-enabled	○	○
Nothing is assigned. In an attempt to write to these bits, write “0”. The value, if read, turns out to be indeterminate.			—	—

Note 1: Writing a value to an address after “1” is written to this bit returns the bit to “0” . Other bits do not automatically return to “0” and they must therefore be reset by the program.

Figure 1.13.6. Protect register

Overview of Interrupt

Type of Interrupts

Figure 1.14.1 lists the types of interrupts.

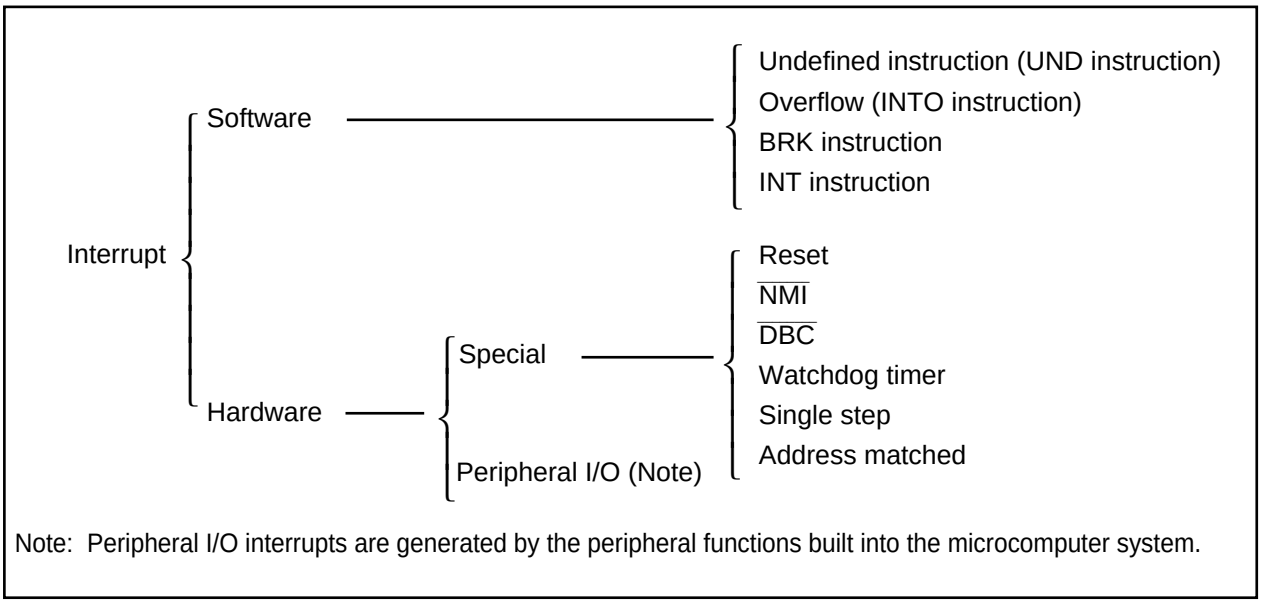

Figure 1.14.1. Classification of interrupts

- Maskable interrupt : An interrupt which can be enabled (disabled) by the interrupt enable flag (I flag) or whose interrupt priority **can be changed** by priority level.
- Non-maskable interrupt : An interrupt which cannot be enabled (disabled) by the interrupt enable flag (I flag) or whose interrupt priority **cannot be changed** by priority level.

Software Interrupts

A software interrupt occurs when executing certain instructions. Software interrupts are non-maskable interrupts.

- **Undefined instruction interrupt**
  An undefined instruction interrupt occurs when executing the UND instruction.
- **Overflow interrupt**
  An overflow interrupt occurs when executing the INTO instruction with the overflow flag (O flag) set to “1”. The following are instructions whose O flag changes by arithmetic:
  ABS, ADC, ADCF, ADD, CMP, DIV, DIVU, DIVX, NEG, RMPA, SBB, SHA, SUB
- **BRK interrupt**
  A BRK interrupt occurs when executing the BRK instruction.
- **INT interrupt**
  An INT interrupt occurs when assiging one of software interrupt numbers 0 through 63 and executing the INT instruction. Software interrupt numbers 0 through 31 are assigned to peripheral I/O interrupts, so executing the INT instruction allows executing the same interrupt routine that a peripheral I/O interrupt does.
  The stack pointer (SP) used for the INT interrupt is dependent on which software interrupt number is involved.
  So far as software interrupt numbers 0 through 31 are concerned, the microcomputer saves the stack pointer assignment flag (U flag) when it accepts an interrupt request. If change the U flag to “0” and select the interrupt stack pointer (ISP), and then execute an interrupt sequence. When returning from the interrupt routine, the U flag is returned to the state it was before the acceptance of interrupt request. So far as software numbers 32 through 63 are concerned, the stack pointer does not make a shift.

Hardware Interrupts

Hardware interrupts are classified into two types — special interrupts and peripheral I/O interrupts.

(1) Special interrupts

Special interrupts are non-maskable interrupts.

- **Reset**

  Reset occurs if an “L” is input to the $\overline{\text{RESET}}$ pin.

- **$\overline{\text{NMI}}$ interrupt**

  An $\overline{\text{NMI}}$ interrupt occurs if an “L” is input to the $\overline{\text{NMI}}$ pin.

- **$\overline{\text{DBC}}$ interrupt**

  This interrupt is exclusively for the debugger, do not use it in other circumstances.

- **Watchdog timer interrupt**

  Generated by the watchdog timer.

- **Single-step interrupt**

  This interrupt is exclusively for the debugger, do not use it in other circumstances. With the debug flag (D flag) set to “1”, a single-step interrupt occurs after one instruction is executed.

- **Address match interrupt**

  An address match interrupt occurs immediately before the instruction held in the address indicated by the address match interrupt register is executed with the address match interrupt enable bit set to “1”. If an address other than the first address of the instruction in the address match interrupt register is set, no address match interrupt occurs. For address match interrupt, see 2.11 Address match Interrupt.

(2) Peripheral I/O interrupts

A peripheral I/O interrupt is generated by one of built-in peripheral functions. Built-in peripheral functions are dependent on classes of products, so the interrupt factors too are dependent on classes of products. The interrupt vector table is the same as the one for software interrupt numbers 0 through 31 the INT instruction uses. Peripheral I/O interrupts are maskable interrupts.

- **Bus collision detection interrupt**

  This is an interrupt that the serial I/O bus collision detection generates.

- **DMA0 interrupt, DMA1 interrupt**

  These are interrupts that DMA generates.

- **Key-input interrupt**

  A key-input interrupt occurs if an “L” is input to the $\overline{\text{KI}}$ pin.

- **A-D conversion interrupt**

  This is an interrupt that the A-D converter generates.

- **UART0, UART1, UART2/NACK, SI/O3 and SI/O4 transmission interrupt**

  These are interrupts that the serial I/O transmission generates.

- **UART0, UART1, UART2/ACK, SI/O3 and SI/O4 reception interrupt**

  These are interrupts that the serial I/O reception generates.

- **Timer A0 interrupt through timer A4 interrupt**

  These are interrupts that timer A generates

- **Timer B0 interrupt through timer B5 interrupt**

  These are interrupts that timer B generates.

- **$\overline{\text{INT0}}$ interrupt through $\overline{\text{INT5}}$ interrupt**

  An $\overline{\text{INT}}$ interrupt occurs if either a rising edge or a falling edge or a both edge is input to the $\overline{\text{INT}}$ pin.

  Note 1: In M30623 (80-pin package), can not use $\overline{\text{INT}}_3$ to $\overline{\text{INT}}_5$ as the interrupt factors, because $P1_5/D_{13}/\overline{\text{INT}}_3$ to $P1_7/D_{15}/\overline{\text{INT}}_5$ have no corresponding external pin.

Interrupts and Interrupt Vector Tables

If an interrupt request is accepted, a program branches to the interrupt routine set in the interrupt vector table. Set the first address of the interrupt routine in each vector table. Figure 1.14.2 shows the format for specifying the address.

Two types of interrupt vector tables are available — fixed vector table in which addresses are fixed and variable vector table in which addresses can be varied by the setting.

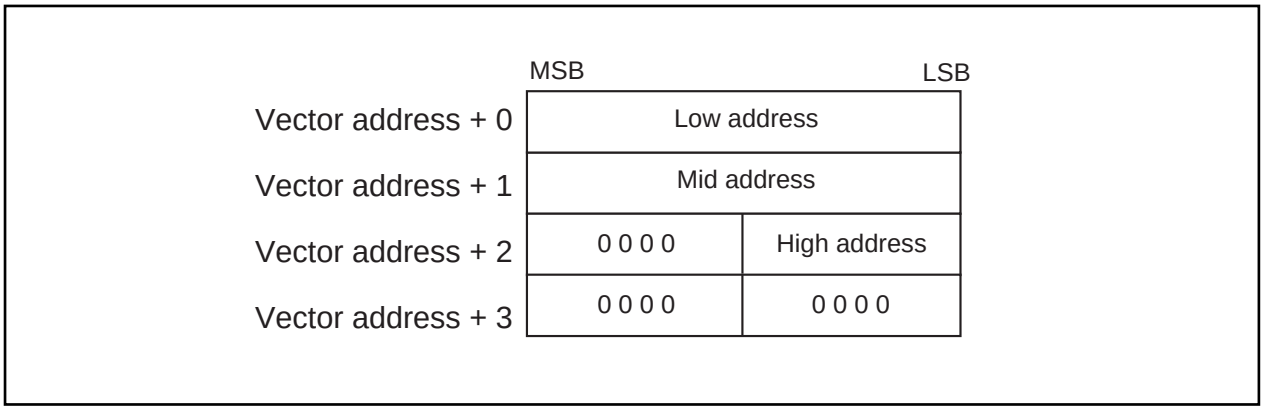

Figure 1.14.2. Format for specifying interrupt vector addresses

- **Fixed vector tables**

  The fixed vector table is a table in which addresses are fixed. The vector tables are located in an area extending from FFFDC16 to FFFFF16. One vector table comprises four bytes. Set the first address of interrupt routine in each vector table. Table 1.14.1 shows the interrupts assigned to the fixed vector tables and addresses of vector tables.

Table 1.14.1. Interrupts assigned to the fixed vector tables and addresses of vector tables

Interrupt source	Vector table addresses Address (L) to address (H)	Remarks
Undefined instruction	FFFDC16 to FFFDF16	Interrupt on UND instruction
Overflow	FFFE016 to FFFE316	Interrupt on INTO instruction
BRK instruction	FFFE416 to FFFE716	If the vector contains FF16, program execution starts from the address shown by the vector in the variable vector table
Address match	FFFE816 to FFFEB16	There is an address-matching interrupt enable bit
Single step (Note)	FFFEC16 to FFFEF16	Do not use
Watchdog timer	FFFF016 to FFFF316	
$\overline{\text{DBC}}$ (Note)	FFFF416 to FFFF716	Do not use
NMI	FFFF816 to FFFFB16	External interrupt by input to $\overline{\text{NMI}}$ pin
Reset	FFFFC16 to FFFFF16	

Note: Interrupts used for debugging purposes only.

• **Variable vector tables**

The addresses in the variable vector table can be modified, according to the user's settings. Indicate the first address using the interrupt table register (INTB). The 256-byte area subsequent to the address the INTB indicates becomes the area for the variable vector tables. One vector table comprises four bytes. Set the first address of the interrupt routine in each vector table. Table 1.14.2 shows the interrupts assigned to the variable vector tables and addresses of vector tables.

Table 1.14.2. Interrupts assigned to the variable vector tables and addresses of vector tables

Software interrupt number	Vector table address Address (L) to address (H)	Interrupt source	Remarks
Software interrupt number 0	+0 to +3 (Note 1)	BRK instruction	Cannot be masked I flag
Software interrupt number 4	+16 to +19 (Note 1)	$\overline{\text{INT3}}$ (Note 4)	
Software interrupt number 5	+20 to +23 (Note 1)	Timer B5	
Software interrupt number 6	+24 to +27 (Note 1)	Timer B4	
Software interrupt number 7	+28 to +31 (Note 1)	Timer B3	
Software interrupt number 8	+32 to +35 (Note 1)	SI/O4/$\overline{\text{INT5}}$ (Note 2, Note 4)	
Software interrupt number 9	+36 to +39 (Note 1)	SI/O3/$\overline{\text{INT4}}$ (Note 2, Note 4)	
Software interrupt number 10	+40 to +43 (Note 1)	Bus collision detection	
Software interrupt number 11	+44 to +47 (Note 1)	DMA0	
Software interrupt number 12	+48 to +51 (Note 1)	DMA1	
Software interrupt number 13	+52 to +55 (Note 1)	Key input interrupt	
Software interrupt number 14	+56 to +59 (Note 1)	A-D	
Software interrupt number 15	+60 to +63 (Note 1)	UART2 transmit/NACK (Note 3)	
Software interrupt number 16	+64 to +67 (Note 1)	UART2 receive/ACK (Note 3)	
Software interrupt number 17	+68 to +71 (Note 1)	UART0 transmit	
Software interrupt number 18	+72 to +75 (Note 1)	UART0 receive	
Software interrupt number 19	+76 to +79 (Note 1)	UART1 transmit	
Software interrupt number 20	+80 to +83 (Note 1)	UART1 receive	
Software interrupt number 21	+84 to +87 (Note 1)	Timer A0	
Software interrupt number 22	+88 to +91 (Note 1)	Timer A1	
Software interrupt number 23	+92 to +95 (Note 1)	Timer A2	
Software interrupt number 24	+96 to +99 (Note 1)	Timer A3	
Software interrupt number 25	+100 to +103 (Note 1)	Timer A4	
Software interrupt number 26	+104 to +107 (Note 1)	Timer B0	
Software interrupt number 27	+108 to +111 (Note 1)	Timer B1	
Software interrupt number 28	+112 to +115 (Note 1)	Timer B2	
Software interrupt number 29	+116 to +119 (Note 1)	$\overline{\text{INT0}}$	
Software interrupt number 30	+120 to +123 (Note 1)	$\overline{\text{INT1}}$	
Software interrupt number 31	+124 to +127 (Note 1)	$\overline{\text{INT2}}$	
Software interrupt number 32 to Software interrupt number 63	+128 to +131 (Note 1) to +252 to +255 (Note 1)	Software interrupt	Cannot be masked I flag

Note 1: Address relative to address in interrupt table register (INTB).
Note 2: It is selected by interrupt request cause bit (bit 6, 7 in address 035F16).
Note 3: When IIC mode is selected, NACK and ACK interrupts are selected.
Note 4: In M30623 (80-pin package), can not use $\overline{\text{INT3}}$ to $\overline{\text{INT5}}$ as the interrupt factor, because P15/D13/$\overline{\text{INT3}}$ to P17/D15/$\overline{\text{INT5}}$ have no corresponding external pin.

Interrupt Control

Descriptions are given here regarding how to enable or disable maskable interrupts and how to set the priority to be accepted. What is described here does not apply to non-maskable interrupts.

Enable or disable a maskable interrupt using the interrupt enable flag (I flag), interrupt priority level selection bit, or processor interrupt priority level (IPL). Whether an interrupt request is present or absent is indicated by the interrupt request bit. The interrupt request bit and the interrupt priority level selection bit are located in the interrupt control register of each interrupt. Also, the interrupt enable flag (I flag) and the IPL are located in the flag register (FLG).

Figure 1.14.3 shows the memory map of the interrupt control registers.

Interrupt control register

Symbol	Address	When reset
TBiIC(i=3 to 5)	0045_{16} to 0047_{16}	$XXXXX000_2$
BCNIC	$004A_{16}$	$XXXXX000_2$
DMiIC(i=0, 1)	$004B_{16}$, $004C_{16}$	$XXXXX000_2$
KUPIC	$004D_{16}$	$XXXXX000_2$
ADIC	$004E_{16}$	$XXXXX000_2$
SiTIC(i=0 to 2)	0051_{16}, 0053_{16}, $004F_{16}$	$XXXXX000_2$
SiRIC(i=0 to 2)	0052_{16}, 0054_{16}, 0050_{16}	$XXXXX000_2$
TAiIC(i=0 to 4)	0055_{16} to 0059_{16}	$XXXXX000_2$
TBiIC(i=0 to 2)	$005A_{16}$ to $005C_{16}$	$XXXXX000_2$

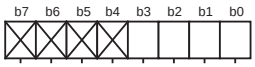

Bit symbol	Bit	Functio	R	W
ILVL0	Interrupt priority level select bit	b2 b1 b0 0 0 0 : Level 0 (interrupt disabled) 0 0 1 : Level 1 0 1 0 : Level 2 0 1 1 : Level 3 1 0 0 : Level 4 1 0 1 : Level 5 1 1 0 : Level 6 1 1 1 : Level 7	○	○
ILVL1			○	○
ILVL2			○	○
IR	Interrupt request bit	0 : Interrupt not requested 1 : Interrupt requested	○	○ (Note 1)
Nothing is assigned. In an attempt to write to these bits, write “0”. The value, if read, turns out to be “0”.			–	–

Note 1: This bit can only be accessed for reset (= 0), but cannot be accessed for set (= 1).
Note 2: To rewrite the interrupt control register, do so at a point that dose not generate the interrupt request for that register. For details, see the precautions for interrupts.

Symbol	Address	When reset
INTiIC (i=3)	0044_{16}	$XX00X000_2$
SiIC/INTjIC (i=4, 3) (j=4, 5)	0048_{16}, 0049_{16}	$XX00X000_2$
INTiIC (i=0 to 2)	$005D_{16}$ to $005F_{16}$	$XX00X000_2$

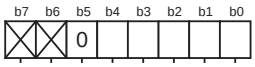

Bit	Bit	Functio	R	W
ILVL0	Interrupt priority level select bit	b2 b1 b0 0 0 0 : Level 0 (interrupt disabled) 0 0 1 : Level 1 0 1 0 : Level 2 0 1 1 : Level 3 1 0 0 : Level 4 1 0 1 : Level 5 1 1 0 : Level 6 1 1 1 : Level 7	○	○
ILVL1			○	○
ILVL2			○	○
IR	Interrupt request bit	0: Interrupt not requested 1: Interrupt requested	○	○ (Note 1)
POL	Polarity select bit	0 : Selects falling edge 1 : Selects rising edge	○	○
Reserved bit		Always set to “0”	○	○
Nothing is assigned. In an attempt to write to these bits, write “0”. The value, if read, turns out to be “0”.			–	–

Note 1: This bit can only be accessed for reset (= 0), but cannot be accessed for set (= 1).

Note 2: In M30623(80-pin package), can not use INT3 to INT5 interrupts. Always set INT3IC to “00”. Each of INT4IC and INT5IC is shared with S3IC and S4IC, but in case of not using as S3IC and S4IC, always set to “00”.
Note 3: To rewrite the interrupt control register, do so at a point that dose not generate the interrupt request for that register. For details, see the precautions for interrupts.

Figure 1.14.3. Interrupt control registers

Interrupt Enable Flag (I flag)

The interrupt enable flag (I flag) controls the enabling and disabling of maskable interrupts. Setting this flag to “1” enables all maskable interrupts; setting it to “0” disables all maskable interrupts. This flag is set to “0” after reset.

Interrupt Request Bit

The interrupt request bit is set to "1" by hardware when an interrupt is requested. After the interrupt is accepted and jumps to the corresponding interrupt vector, the request bit is set to "0" by hardware. The interrupt request bit can also be set to "0" by software. (Do not set this bit to "1").

Interrupt Priority Level Select Bit and Processor Interrupt Priority Level (IPL)

Set the interrupt priority level using the interrupt priority level select bit, which is one of the component bits of the interrupt control register. When an interrupt request occurs, the interrupt priority level is compared with the IPL. The interrupt is enabled only when the priority level of the interrupt is higher than the IPL. Therefore, setting the interrupt priority level to “0” disables the interrupt.
Table 1.14.3 shows the settings of interrupt priority levels and Table 1.14.4 shows the interrupt levels enabled, according to the consist of the IPL.

The following are conditions under which an interrupt is accepted:
· interrupt enable flag (I flag) = 1
· interrupt request bit = 1
· interrupt priority level > IPL

The interrupt enable flag (I flag), the interrupt request bit, the interrupt priority select bit, and the IPL are independent, and they are not affected by one another.

Table 1.14.3. Settings of interrupt priority levels

Interrupt priority level select bit (b2 b1 b0)	Interrupt priority level	Priority order
0 0 0	Level 0 (interrupt disabled)	———
0 0 1	Level 1	Low
0 1 0	Level 2	↓
0 1 1	Level 3	
1 0 0	Level 4	
1 0 1	Level 5	
1 1 0	Level 6	
1 1 1	Level 7	High

Table 1.14.4. Interrupt levels enabled according to the contents of the IPL

IPL (IPL_2 IPL_1 IPL_0)	Enabled interrupt priority levels
0 0 0	Interrupt levels 1 and above are enabled
0 0 1	Interrupt levels 2 and above are enabled
0 1 0	Interrupt levels 3 and above are enabled
0 1 1	Interrupt levels 4 and above are enabled
1 0 0	Interrupt levels 5 and above are enabled
1 0 1	Interrupt levels 6 and above are enabled
1 1 0	Interrupt levels 7 and above are enabled
1 1 1	All maskable interrupts are disabled

Rewrite the interrupt control register

To rewrite the interrupt control register, do so at a point that does not generate the interrupt request for that register. If there is possibility of the interrupt request occur, rewrite the interrupt control register after the interrupt is disabled. The program examples are described as follow:

Example 1:

```
INT_SWITCH1:
    FCLR    I              ; Disable interrupts.
    AND.B   #00h, 0055h    ; Clear TA0IC int. priority level and int. request bit.
    NOP                    ; Four NOP instructions are required when using HOLD function.
    NOP
    FSET    I              ; Enable interrupts.
```

Example 2:

```
INT_SWITCH2:
    FCLR    I              ; Disable interrupts.
    AND.B   #00h, 0055h    ; Clear TA0IC int. priority level and int. request bit.
    MOV.W   MEM, R0        ; Dummy read.
    FSET    I              ; Enable interrupts.
```

Example 3:

```
INT_SWITCH3:
    PUSHC   FLG            ; Push Flag register onto stack
    FCLR    I              ; Disable interrupts.
    AND.B   #00h, 0055h    ; Clear TA0IC int. priority level and int. request bit.
    POPC    FLG            ; Enable interrupts.
```

The reason why two NOP instructions (four when using the HOLD function) or dummy read are inserted before FSET I in Examples 1 and 2 is to prevent the interrupt enable flag I from being set before the interrupt control register is rewritten due to effects of the instruction queue.

When a instruction to rewrite the interrupt control register is executed but the interrupt is disabled, the interrupt request bit is not set sometimes even if the interrupt request for that register has been generated. This will depend on the instruction. If this creates problems, use the below instructions to change the register.

Instructions : AND, OR, BCLR, BSET

Interrupt Sequence

An interrupt sequence — what are performed over a period from the instant an interrupt is accepted to the instant the interrupt routine is executed — is described here.

If an interrupt occurs during execution of an instruction, the processor determines its priority when the execution of the instruction is completed, and transfers control to the interrupt sequence from the next cycle. If an interrupt occurs during execution of either the SMOVB, SMOVF, SSTR or RMPA instruction, the processor temporarily suspends the instruction being executed, and transfers control to the interrupt sequence.

In the interrupt sequence, the processor carries out the following in sequence given:

(1) CPU gets the interrupt information (the interrupt number and interrupt request level) by reading address 00000_{16}.
(2) Saves the content of the flag register (FLG) as it was immediately before the start of interrupt sequence in the temporary register (Note) within the CPU.
(3) Sets the interrupt enable flag (I flag), the debug flag (D flag), and the stack pointer select flag (U flag) to “0” (the U flag, however does not change if the INT instruction, in software interrupt numbers 32 through 63, is executed)
(4) Saves the content of the temporary register (Note) within the CPU in the stack area.
(5) Saves the content of the program counter (PC) in the stack area.
(6) Sets the interrupt priority level of the accepted instruction in the IPL.

After the interrupt sequence is completed, the processor resumes executing instructions from the first address of the interrupt routine.

Note: This register cannot be utilized by the user.

Interrupt Response Time

'Interrupt response time' is the period between the instant an interrupt occurs and the instant the first instruction within the interrupt routine has been executed. This time comprises the period from the occurrence of an interrupt to the completion of the instruction under execution at that moment (a) and the time required for executing the interrupt sequence (b). Figure 1.14.4 shows the interrupt response time.

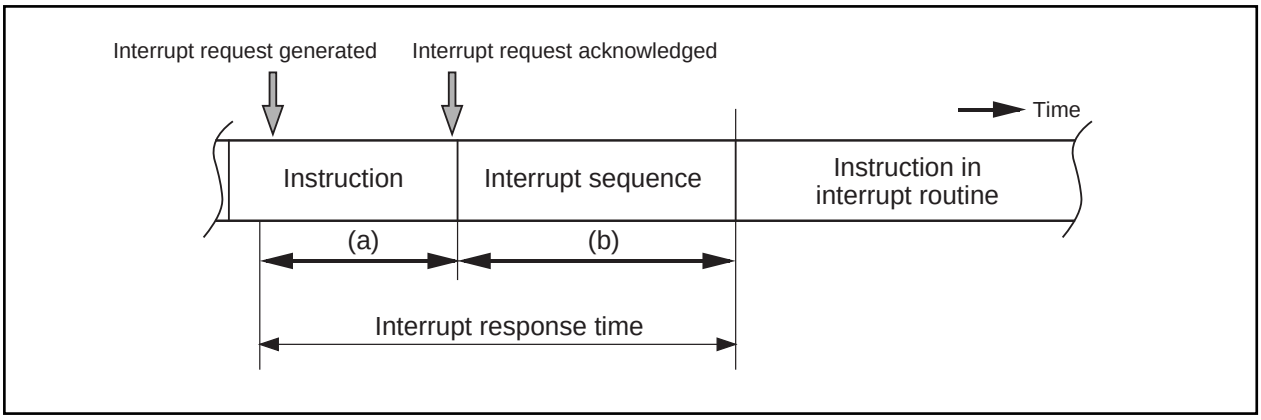

Figure 1.14.4. Interrupt response time

Time (a) is dependent on the instruction under execution. Thirty cycles is the maximum required for the DIVX instruction (without wait).

Time (b) is as shown in Table 1.14.5.

Table 1.14.5. Time required for executing the interrupt sequence

Interrupt vector address	Stack pointer (SP) value	16-Bit bus, without wait	8-Bit bus, without wait
Even	Even	18 cycles (Note 1)	20 cycles (Note 1)
Even	Odd	19 cycles (Note 1)	20 cycles (Note 1)
Odd (Note 2)	Even	19 cycles (Note 1)	20 cycles (Note 1)
Odd (Note 2)	Odd	20 cycles (Note 1)	20 cycles (Note 1)

Note 1: Add 2 cycles in the case of a $\overline{DBC}$ interrupt; add 1 cycle in the case either of an address coincidence interrupt or of a single-step interrupt.

Note 2: Locate an interrupt vector address in an even address, if possible.

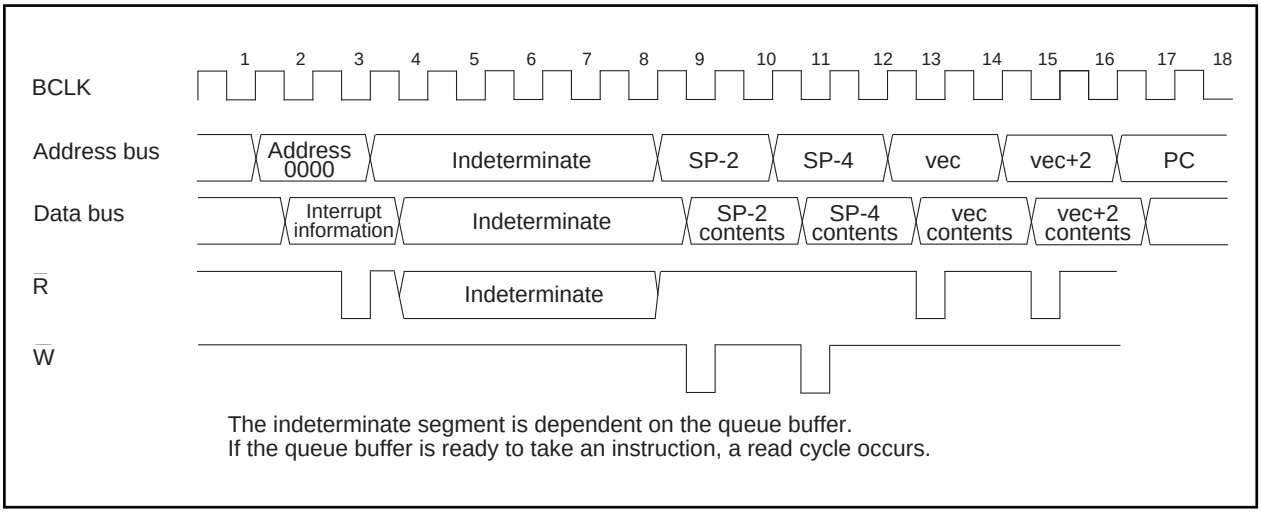

Figure 1.14.5. Time required for executing the interrupt sequence

Variation of IPL when Interrupt Request is Accepted

If an interrupt request is accepted, the interrupt priority level of the accepted interrupt is set in the IPL.

If an interrupt request, that does not have an interrupt priority level, is accepted, one of the values shown in Table 1.14.6 is set in the IPL.

Table 1.14.6. Relationship between interrupts without interrupt priority levels and IPL

Interrupt sources without priority levels	Value set in the IPL
Watchdog timer, $\overline{NMI}$	7
Reset	0
Other	Not changed

Saving Registers

In the interrupt sequence, only the contents of the flag register (FLG) and that of the program counter (PC) are saved in the stack area.

First, the processor saves the four higher-order bits of the program counter, and 4 upper-order bits and 8 lower-order bits of the FLG register, 16 bits in total, in the stack area, then saves 16 lower-order bits of the program counter. Figure 1.14.6 shows the state of the stack as it was before the acceptance of the interrupt request, and the state the stack after the acceptance of the interrupt request.

Save other necessary registers at the beginning of the interrupt routine using software. Using the PUSHM instruction alone can save all the registers except the stack pointer (SP).

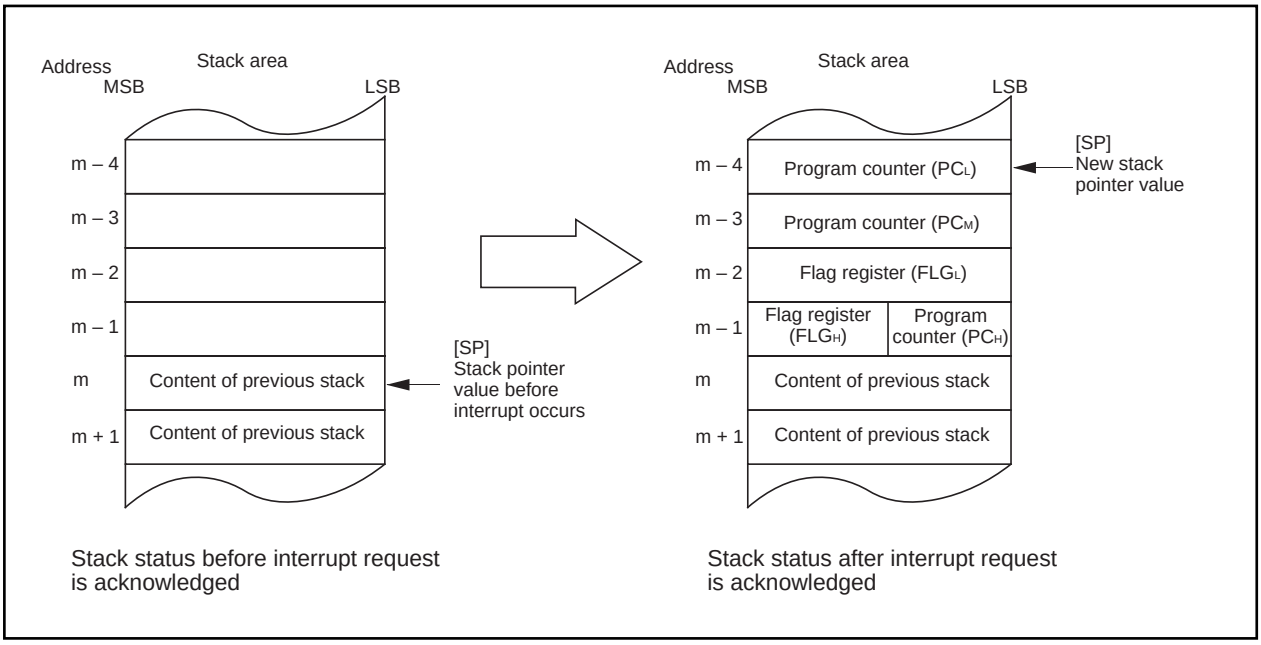

Figure 1.14.6. State of stack before and after acceptance of interrupt request

The operation of saving registers carried out in the interrupt sequence is dependent on whether the content of the stack pointer, at the time of acceptance of an interrupt request, is even or odd. If the content of the stack pointer (Note) is even, the content of the flag register (FLG) and the content of the program counter (PC) are saved, 16 bits at a time. If odd, their contents are saved in two steps, 8 bits at a time. Figure 1.14.7 shows the operation of the saving registers.
Note: Stack pointer indicated by U flag.

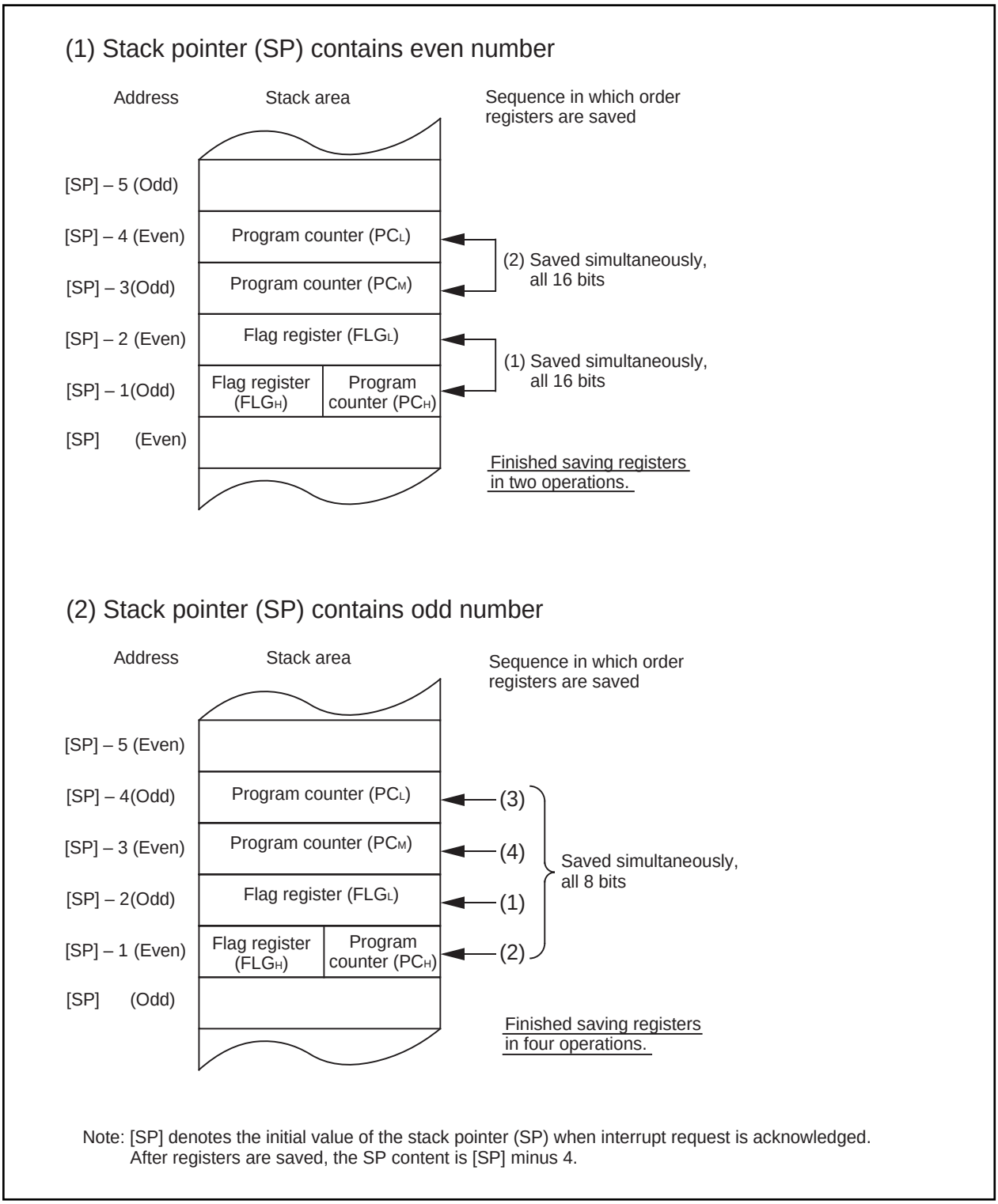

Figure 1.14.7. Operation of saving registers

Returning from an Interrupt Routine

Executing the REIT instruction at the end of an interrupt routine returns the contents of the flag register (FLG) as it was immediately before the start of interrupt sequence and the contents of the program counter (PC), both of which have been saved in the stack area. Then control returns to the program that was being executed before the acceptance of the interrupt request, so that the suspended process resumes.

Return the other registers saved by software within the interrupt routine using the POPM or similar instruction before executing the REIT instruction.

Interrupt Priority

If there are two or more interrupt requests occurring at a point in time within a single sampling (checking whether interrupt requests are made), the interrupt assigned a higher priority is accepted.

Assign an arbitrary priority to maskable interrupts (peripheral I/O interrupts) using the interrupt priority level select bit. If the same interrupt priority level is assigned, however, the interrupt assigned a higher hardware priority is accepted.

Priorities of the special interrupts, such as Reset (dealt with as an interrupt assigned the highest priority), watchdog timer interrupt, etc. are regulated by hardware.

Figure 1.14.8 shows the priorities of hardware interrupts.

Software interrupts are not affected by the interrupt priority. If an instruction is executed, control branches invariably to the interrupt routine.

Reset > $\overline{\text{NMI}}$ > $\overline{\text{DBC}}$ > Watchdog timer > Peripheral I/O > Single step > Address match

Figure 1.14.8. Hardware interrupts priorities

Interrupt resolution circuit

When two or more interrupts are generated simultaneously, this circuit selects the interrupt with the highest priority level. Figure 1.14.9 shows the circuit that judges the interrupt priority level.

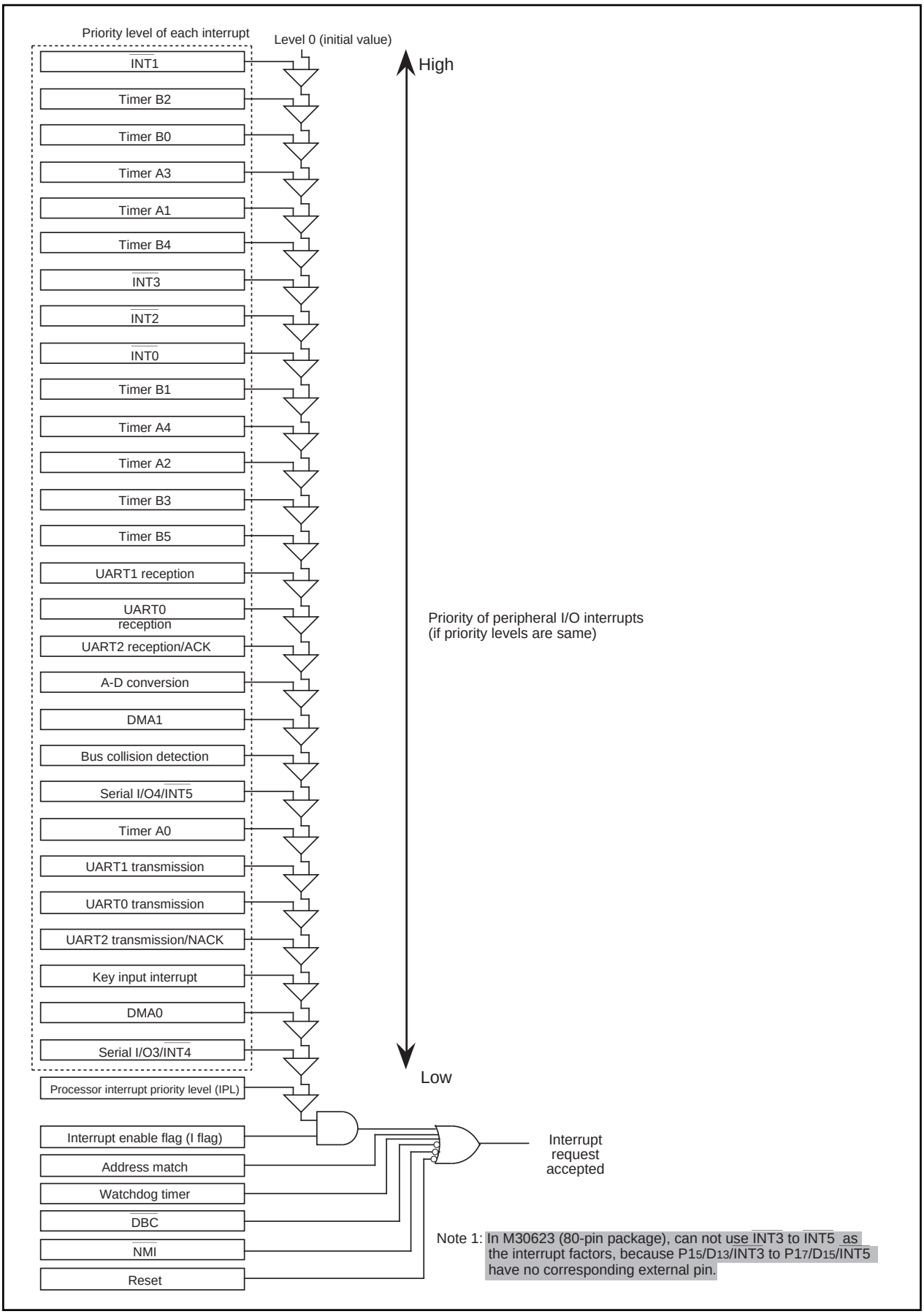

Figure 1.14.9. Maskable interrupts priorities (peripheral I/O interrupts)

$\overline{\text{INT}}$ Interrupt

$\overline{\text{INT0}}$ to $\overline{\text{INT5}}$ are triggered by the edges of external inputs. The edge polarity is selected using the polarity select bit.

Of interrupt control registers, 0048_{16} is used both as serial I/O4 and external interrupt $\overline{\text{INT5}}$ input control register, and 0049_{16} is used both as serial I/O3 and as external interrupt $\overline{\text{INT4}}$ input control register. Use the interrupt request cause select bits - bits 6 and 7 of the interrupt request cause select register ($035F_{16}$) - to specify which interrupt request cause to select. After having set an interrupt request cause, be sure to clear the corresponding interrupt request bit before enabling an interrupt.

Either of the interrupt control registers - 0048_{16}, 0049_{16} - has the polarity-switching bit. Be sure to set this bit to “0” to select an serial I/O as the interrupt request cause.

As for external interrupt input, an interrupt can be generated both at the rising edge and at the falling edge by setting “1” in the INTi interrupt polarity switching bit of the interrupt request cause select register ($035F_{16}$). To select both edges, set the polarity switching bit of the corresponding interrupt control register to ‘falling edge’ (“0”).

Figure 1.14.10 shows the Interrupt request cause select register.

Note 1: In M30623(80-pin package), can not use $\overline{\text{INT3}}$ to $\overline{\text{INT5}}$ as the interrupt factor, because $P1_5/D_{13}/\overline{\text{INT3}}$ to $P1_7/D_{15}/\overline{\text{INT5}}$ have no corresponding external pin.

Interrupt request cause select register

b7	b6	b5	b4	b3	b2	b1	b0

Symbol	Address	When reset
IFSR	$035F_{16}$	00_{16}

Bit symbol	Bit name	Fumction	R	W
IFSR0	INT0 interrupt polarity swiching bit	0 : One edge 1 : Two edges	○	○
IFSR1	INT1 interrupt polarity swiching bit	0 : One edge 1 : Two edges	○	○
IFSR2	INT2 interrupt polarity swiching bit	0 : One edge 1 : Two edges	○	○
IFSR3	INT3 interrupt polarity swiching bit	0 : One edge 1 : Two edges	○	○
IFSR4	INT4 interrupt polarity swiching bit	0 : One edge 1 : Two edges	○	○
IFSR5	INT5 interrupt polarity swiching bit	0 : One edge 1 : Two edges	○	○
IFSR6	Interrupt request cause select bit	0 : SIO3 1 : INT4	○	○
IFSR7	Interrupt request cause select bit	0 : SIO4 1 : INT5	○	○

Note 1: In M30623(80-pin package), can not use $\overline{\text{INT3}}$ to $\overline{\text{INT5}}$ interrupts, so setting data of these bits are invalid.
Note 2: In M30623(80-pin package), can not use $\overline{\text{INT3}}$ to $\overline{\text{INT5}}$ interrupts.

Figure 1.14.10. Interrupt request cause select register

$\overline{\text{NMI}}$ Interrupt

An $\overline{\text{NMI}}$ interrupt is generated when the input to the P8$_5$/$\overline{\text{NMI}}$ pin changes from “H” to “L”. The $\overline{\text{NMI}}$ interrupt is a non-maskable external interrupt. The pin level can be checked in the port P8$_5$ register (bit 5 at address 03F0$_{16}$).

This pin cannot be used as a normal port input.

Key Input Interrupt

If the direction register of any of P10$_4$ to P10$_7$ is set for input and a falling edge is input to that port, a key input interrupt is generated. A key input interrupt can also be used as a key-on wakeup function for cancelling the wait mode or stop mode. However, if you intend to use the key input interrupt, do not use P10$_4$ to P10$_7$ as A-D input ports. Figure 1.14.11 shows the block diagram of the key input interrupt. Note that if an “L” level is input to any pin that has not been disabled for input, inputs to the other pins are not detected as an interrupt.

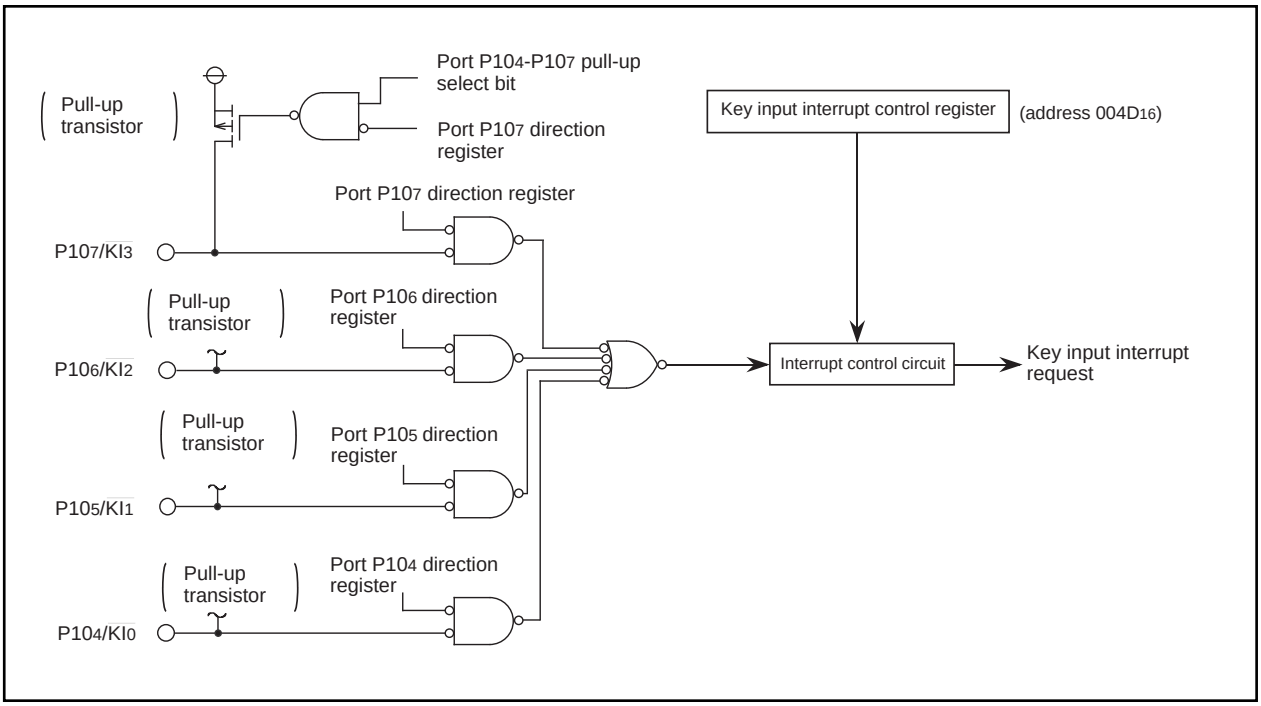

Figure 1.14.11. Block diagram of key input interrupt

Address Match Interrupt

An address match interrupt is generated when the address match interrupt address register contents match the program counter value. Two address match interrupts can be set, each of which can be enabled and disabled by an address match interrupt enable bit. Address match interrupts are not affected by the interrupt enable flag (I flag) and processor interrupt priority level (IPL). The value of the program counter (PC) for an address match interrupt varies depending on the instruction being executed.

Figure 1.14.12 shows the address match interrupt-related registers.

Address match interrupt enable register

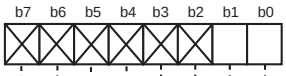

Symbol	Address	When reset
AIER	0009_{16}	$XXXXXX00_2$

Bit symbol	Bit name	Function	R	W
AIER0	Address match interrupt 0 enable bit	0 : Interrupt disabled 1 : Interrupt enabled	○	○
AIER1	Address match interrupt 1 enable bit	0 : Interrupt disabled 1 : Interrupt enabled	○	○
Nothing is assigned. In an attempt to write to these bits, write “0”. The value, if read, turns out to be indeterminated.			—	—

Address match interrupt register i (i = 0, 1)

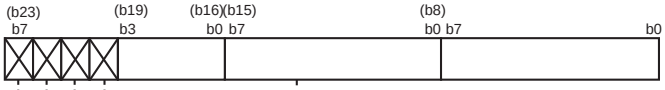

Symbol	Address	When reset
RMAD0	0012_{16} to 0010_{16}	$X00000_{16}$
RMAD1	0016_{16} to 0014_{16}	$X00000_{16}$

Function	Values that can be set	R	W
Address setting register for address match interrupt	00000_{16} to $FFFFF_{16}$	○	○
Nothing is assigned. In an attempt to write to these bits, write “0”. The value, if read, turns out to be indeterminated.		—	—

Figure 1.14.12. Address match interrupt-related registers

Precautions for Interrupts

(1) Reading address 00000_{16}

- When maskable interrupt is occurred, CPU read the interrupt information (the interrupt number and interrupt request level) in the interrupt sequence.
  The interrupt request bit of the certain interrupt written in address 00000_{16} will then be set to “0”.
  Reading address 00000_{16} by software sets enabled highest priority interrupt source request bit to “0”.
  Though the interrupt is generated, the interrupt routine may not be executed.
  Do not read address 00000_{16} by software.

(2) Setting the stack pointer

- The value of the stack pointer immediately after reset is initialized to 0000_{16}. Accepting an interrupt before setting a value in the stack pointer may become a factor of runaway. Be sure to set a value in the stack pointer before accepting an interrupt. When using the $\overline{NMI}$ interrupt, initialize the stack point at the beginning of a program. Concerning the first instruction immediately after reset, generating any interrupts including the $\overline{NMI}$ interrupt is prohibited.

(3) The $\overline{NMI}$ interrupt

- As for the $\overline{NMI}$ interrupt pin, an interrupt cannot be disabled. Connect it to the Vcc pin via a resistor (pull-up) if unused. Be sure to work on it.
- The $\overline{NMI}$ pin also serves as $P8_5$, which is exclusively input. Reading the contents of the P8 register allows reading the pin value. Use the reading of this pin only for establishing the pin level at the time when the $\overline{NMI}$ interrupt is input.
- Do not reset the CPU with the input to the $\overline{NMI}$ pin being in the “L” state.
- Do not attempt to go into stop mode with the input to the $\overline{NMI}$ pin being in the “L” state. With the input to the $\overline{NMI}$ being in the “L” state, the CM10 is fixed to “0”, so attempting to go into stop mode is turned down.
- Do not attempt to go into wait mode with the input to the $\overline{NMI}$ pin being in the “L” state. With the input to the $\overline{NMI}$ pin being in the “L” state, the CPU stops but the oscillation does not stop, so no power is saved. In this instance, the CPU is returned to the normal state by a later interrupt.
- Signals input to the $\overline{NMI}$ pin require an "L" level of 1 clock or more, from the operation clock of the CPU.

(4) External interrupt

- Either an “L” level or an “H” level of at least 250 ns width is necessary for the signal input to pins $\overline{INT_0}$ through $\overline{INT_5}$ regardless of the CPU operation clock.
- When the polarity of the $\overline{INT_0}$ to $\overline{INT_5}$ pins is changed, the interrupt request bit is sometimes set to "1". After changing the polarity, set the interrupt request bit to "0". Figure 1.14.13 shows the procedure for changing the $\overline{INT}$ interrupt generate factor.

Note 1: In M30623(80-pin package), can not use $\overline{INT_3}$ to $\overline{INT_5}$ as the interrupt factor,because $P1_5/D_{13}/\overline{INT_3}$ to $P1_7/D_{15}/\overline{INT_5}$ have no corresponding external pin.

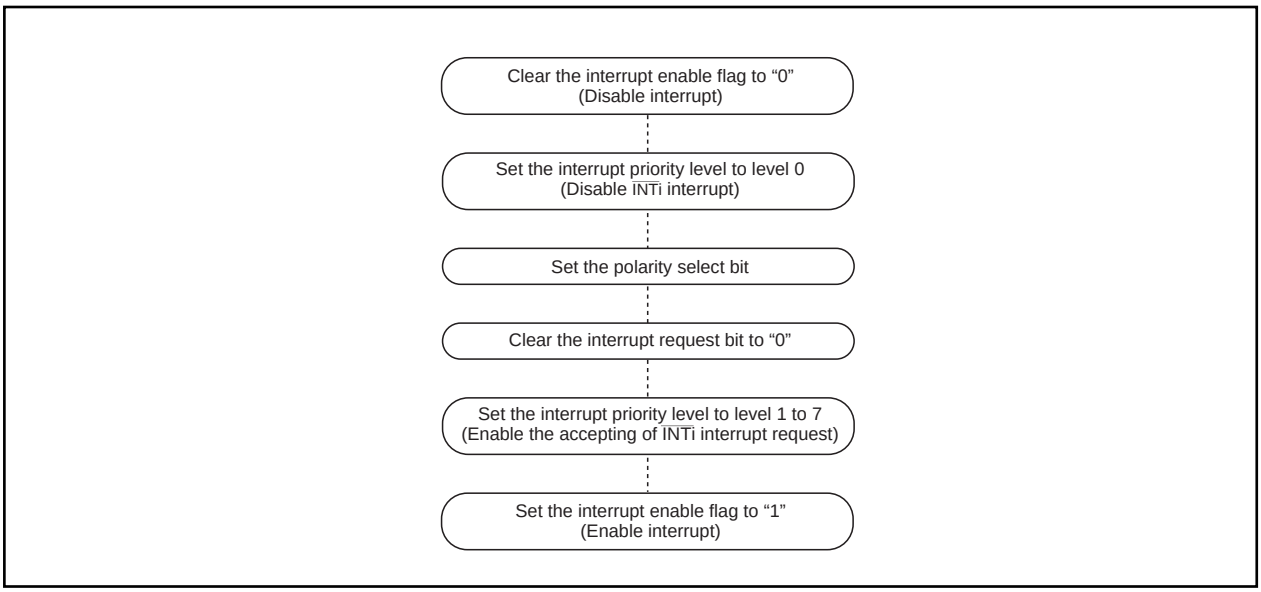

Figure 1.14.13. Switching condition of INT interrupt request

(5) Rewrite the interrupt control register

- To rewrite the interrupt control register, do so at a point that does not generate the interrupt request for that register. If there is possibility of the interrupt request occur, rewrite the interrupt control register after the interrupt is disabled. The program examples are described as follow:

Example 1:

```
INT_SWITCH1:
    FCLR    I              ; Disable interrupts.
    AND.B   #00h, 0055h    ; Clear TA0IC int. priority level and int. request bit.
    NOP                    ; Four NOP instructions are required when using HOLD function.
    NOP
    FSET    I              ; Enable interrupts.
```

Example 2:

```
INT_SWITCH2:
    FCLR    I              ; Disable interrupts.
    AND.B   #00h, 0055h    ; Clear TA0IC int. priority level and int. request bit.
    MOV.W   MEM, R0        ; Dummy read.
    FSET    I              ; Enable interrupts.
```

Example 3:

```
INT_SWITCH3:
    PUSHC   FLG            ; Push Flag register onto stack
    FCLR    I              ; Disable interrupts.
    AND.B   #00h, 0055h    ; Clear TA0IC int. priority level and int. request bit.
    POPC    FLG            ; Enable interrupts.
```

The reason why two NOP instructions (four when using the HOLD function) or dummy read are inserted before FSET I in Examples 1 and 2 is to prevent the interrupt enable flag I from being set before the interrupt control register is rewritten due to effects of the instruction queue.

- When a instruction to rewrite the interrupt control register is executed but the interrupt is disabled, the interrupt request bit is not set sometimes even if the interrupt request for that register has been generated. This will depend on the instruction. If this creates problems, use the below instructions to change the register.
  Instructions : AND, OR, BCLR, BSET

Watchdog Timer

The watchdog timer has the function of detecting when the program is out of control. The watchdog timer is a 15-bit counter which down-counts the clock derived by dividing the BCLK using the prescaler. A watchdog timer interrupt is generated when an underflow occurs in the watchdog timer. When X_{IN} is selected for the BCLK, bit 7 of the watchdog timer control register (address $000F_{16}$) selects the prescaler division ratio (by 16 or by 128). When X_{CIN} is selected as the BCLK, the prescaler is set for division by 2 regardless of bit 7 of the watchdog timer control register (address $000F_{16}$). Thus the watchdog timer's period can be calculated as given below. The watchdog timer's period is, however, subject to an error due to the pre-scaler.

With X_{IN} chosen for BCLK

$$\textbf{Watchdog timer period} = \frac{\textbf{pre-scaler dividing ratio (16 or 128) X watchdog timer count (32768)}}{\textbf{BCLK}}$$

With X_{CIN} chosen for BCLK

$$\textbf{Watchdog timer period} = \frac{\textbf{pre-scaler dividing ratio (2) X watchdog timer count (32768)}}{\textbf{BCLK}}$$

For example, suppose that BCLK runs at 10 MHz and that 16 has been chosen for the dividing ratio of the pre-scaler, then the watchdog timer's period becomes approximately 52.4 ms.

The watchdog timer is initialized by writing to the watchdog timer start register (address $000E_{16}$) and when a watchdog timer interrupt request is generated. The prescaler is initialized only when the microcomputer is reset. After a reset is cancelled, the watchdog timer and prescaler are both stopped. The count is started by writing to the watchdog timer start register (address $000E_{16}$).
Figure 1.15.1 shows the block diagram of the watchdog timer. Figure 1.15.2 shows the watchdog timer-related registers.

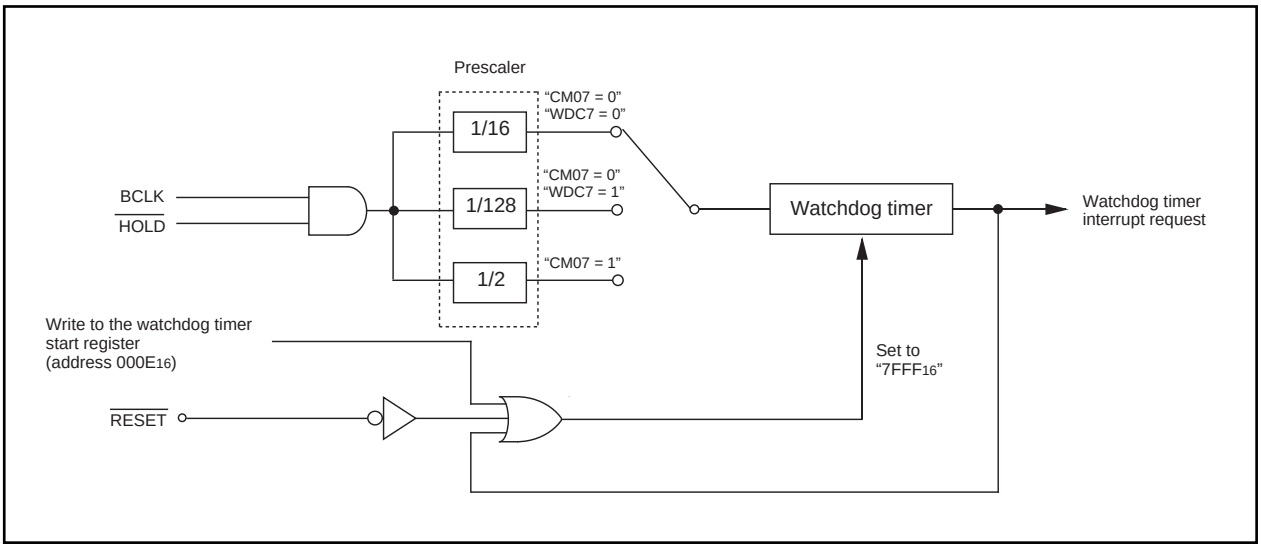

Figure 1.15.1. Block diagram of watchdog timer

Watchdog timer control register

b7	b6	b5	b4	b3	b2	b1	b0
	0	0					

Symbol	Address	When reset
WDC	000F16	00✻XXXXX2

Bit symbol	Bit name	Function	R	W
High-order bit of watchdog timer			○	×
WDV5	Cold start / warm start discrimination flag (Note 1)	0 : Cold start 1 : Warm start	○	○
Reserved bit		Must always be set to "0"	○	○
WDC7	Prescaler select bit	0 : Divided by 16 1 : Divided by 128	○	○

Note 1: When this flag is written ''0'' or ''1'', it is set ''1'' automatically .
✻ : This bit is not under the influence of a reset.

Watchdog timer start register

b7	b0

Symbol	Address	When reset
WDTS	000E16	Indeterminate

Function	R	W
The watchdog timer is initialized and starts counting after a write instruction to this register. The watchdog timer value is always initialized to "7FFF16" regardless of whatever value is written.	×	○

Figure 1.15.2. Watchdog timer control and start registers

Cold start / Warm start

The cold start/warm start discrimination flag(bit 5 at 000F16) indicates the last reset by power on(cold start) or by reset signal(warm start).

The cold start/warm start discrimination flag is set ''0'' at power on, and is set ''1'' at writing any data to the watchdog timer control register(address is 000F16). The flag is not set to ''0'' by the software reset and the input of reset signal.

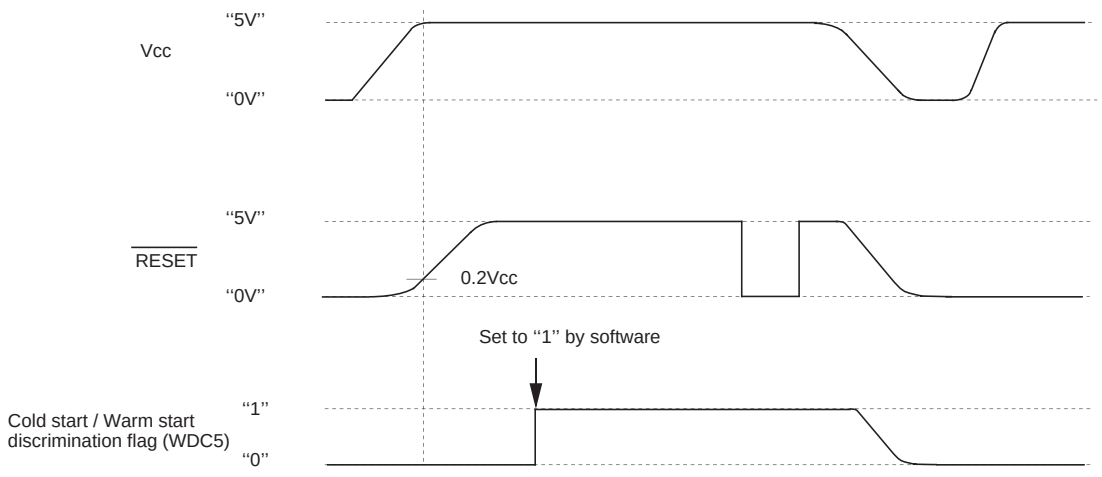

Figure 1.15.3. Cold sgtart / Warm start

DMAC

This microcomputer has two DMAC (direct memory access controller) channels that allow data to be sent to memory without using the CPU. DMAC shares the same data bus with the CPU. The DMAC is given a higher right of using the bus than the CPU, which leads to working the cycle stealing method. On this account, the operation from the occurrence of DMA transfer request signal to the completion of 1-word (16-bit) or 1-byte (8-bit) data transfer can be performed at high speed. Figure 1.16.1 shows the block diagram of the DMAC. Table 1.16.1 shows the DMAC specifications. Figures 1.16.2 to 1.16.4 show the registers used by the DMAC.

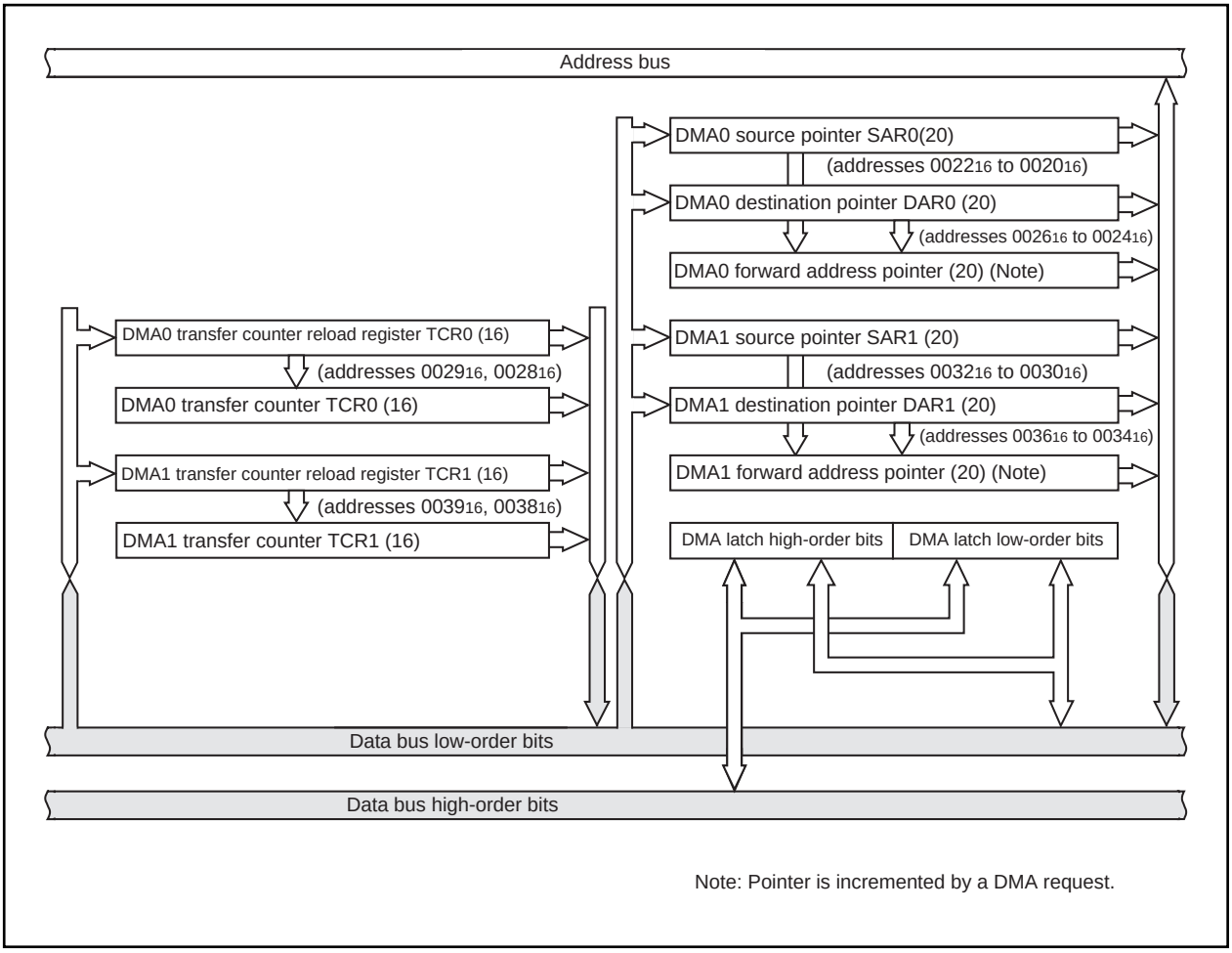

Figure 1.16.1. Block diagram of DMAC

Either a write signal to the software DMA request bit or an interrupt request signal is used as a DMA transfer request signal. But the DMA transfer is affected neither by the interrupt enable flag (I flag) nor by the interrupt priority level. The DMA transfer doesn't affect any interrupts either.

If the DMAC is active (the DMA enable bit is set to 1), data transfer starts every time a DMA transfer request signal occurs. If the cycle of the occurrences of DMA transfer request signals is higher than the DMA transfer cycle, there can be instances in which the number of transfer requests doesn't agree with the number of transfers. For details, see the description of the DMA request bit.

Table 1.16.1. DMAC specifications

Item	Specification
No. of channels	2 (cycle steal method)
Transfer memory space	• From any address in the 1M bytes space to a fixed address • From a fixed address to any address in the 1M bytes space • From a fixed address to a fixed address (Note that DMA-related registers [0020$_{16}$ to 003F$_{16}$] cannot be accessed)
Maximum No. of bytes transferred	128K bytes (with 16-bit transfers) or 64K bytes (with 8-bit transfers)
DMA request factors (Note)	Falling edge of $\overline{INT0}$ or $\overline{INT1}$ ($\overline{INT0}$ can be selected by DMA0, $\overline{INT1}$ by DMA1) or both edge Timer A0 to timer A4 interrupt requests Timer B0 to timer B5 interrupt requests UART0 transfer and reception interrupt requests UART1 transfer and reception interrupt requests UART2 transfer and reception interrupt requests Serial I/O3, 4 interrpt requests A-D conversion interrupt requests Software triggers
Channel priority	DMA0 takes precedence if DMA0 and DMA1 requests are generated simultaneously
Transfer unit	8 bits or 16 bits
Transfer address direction	forward/fixed (forward direction cannot be specified for both source and destination simultaneously)
Transfer mode	• Single transfer mode After the transfer counter underflows, the DMA enable bit turns to "0", and the DMAC turns inactive • Repeat transfer mode After the transfer counter underflows, the value of the transfer counter reload register is reloaded to the transfer counter. The DMAC remains active unless a "0" is written to the DMA enable bit.
DMA interrupt request generation timing	When an underflow occurs in the transfer counter
Active	When the DMA enable bit is set to "1", the DMAC is active. When the DMAC is active, data transfer starts every time a DMA transfer request signal occurs.
Inactive	• When the DMA enable bit is set to "0", the DMAC is inactive. • After the transfer counter underflows in single transfer mode
Forward address pointer and reload timing for transfer counter	At the time of starting data transfer immediately after turning the DMAC active, the value of one of source pointer and destination pointer - the one specified for the forward direction - is reloaded to the forward direction address pointer,and the value of the transfer counter reload register is reloaded to the transfer counter.
Writing to register	Registers specified for forward direction transfer are always write enabled. Registers specified for fixed address transfer are write-enabled when the DMA enable bit is "0".
Reading the register	Can be read at any time. However, when the DMA enable bit is "1", reading the register set up as the forward register is the same as reading the value of the forward address pointer.

Note: DMA transfer is not effective to any interrupt. DMA transfer is affected neither by the interrupt enable flag (I flag) nor by the interrupt priority level.

DMA0 request cause select register

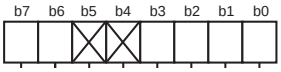

Symbol	Address	When reset
DM0SL	$03B8_{16}$	00_{16}

Bit symbol	Bit name	Function	R	W
DSEL0	DMA request cause select bit	b3 b2 b1 b0 0 0 0 0 : Falling edge of $\overline{\text{INT0}}$ pin 0 0 0 1 : Software trigger 0 0 1 0 : Timer A0 0 0 1 1 : Timer A1 0 1 0 0 : Timer A2 0 1 0 1 : Timer A3 0 1 1 0 : Timer A4 (DMS=0) /two edges of INT0 pin (DMS=1) 0 1 1 1 : Timer B0 (DMS=0) Timer B3 (DMS=1) 1 0 0 0 : Timer B1 (DMS=0) Timer B4 (DMS=1) 1 0 0 1 : Timer B2 (DMS=0) Timer B5 (DMS=1) 1 0 1 0 : UART0 transmit 1 0 1 1 : UART0 receive 1 1 0 0 : UART2 transmit 1 1 0 1 : UART2 receive 1 1 1 0 : A-D conversion 1 1 1 1 : UART1 transmit	○	○
DSEL1			○	○
DSEL2			○	○
DSEL3			○	○
Nothing is assigned. In an attempt to write to these bits, write “0”. The value, if read, turns out to be “0”.			–	–
DMS	DMA request cause expansion bit	0 : Normal 1 : Expanded cause	○	○
DSR	Software DMA request bit	If software trigger is selected, a DMA request is generated by setting this bit to “1” (When read, the value of this bit is always “0”)	○	○

Figure 1.16.2. DMAC register (1)

DMA1 request cause select register

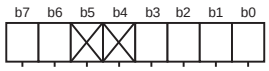

Symbol	Address	When reset
DM1SL	03BA16	0016

Bit symbol	Bit name	Function	R	W
DSEL0	DMA request cause select bit	b3 b2 b1 b0 0 0 0 0 : Falling edge of $\overline{\text{INT1}}$ pin 0 0 0 1 : Software trigger 0 0 1 0 : Timer A0 0 0 1 1 : Timer A1 0 1 0 0 : Timer A2 0 1 0 1 : Timer A3(DMS=0) /serial I/O3 (DMS=1) 0 1 1 0 : Timer A4 (DMS=0) /serial I/O4 (DMS=1) 0 1 1 1 : Timer B0 (DMS=0) /two edges of INT1 (DMS=1) 1 0 0 0 : Timer B1 1 0 0 1 : Timer B2 1 0 1 0 : UART0 transmit 1 0 1 1 : UART0 receive 1 1 0 0 : UART2 transmit 1 1 0 1 : UART2 receive 1 1 1 0 : A-D conversion 1 1 1 1 : UART1 receive	○	○
DSEL1			○	○
DSEL2			○	○
DSEL3			○	○
Nothing is assigned. In an attempt to write to these bits, write “0”. The value, if read, turns out to be “0”.			–	–
DMS	DMA request cause expansion bit	0 : Normal 1 : Expanded cause	○	○
DSR	Software DMA request bit	If software trigger is selected, a DMA request is generated by setting this bit to “1” (When read, the value of this bit is always “0”)	○	○

DMAi control register

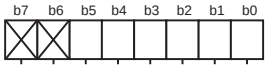

Symbol	Address	When reset
DMiCON(i=0,1)	002C16, 003C16	00000X002

Bit symbol	Bit name	Function	R	W
DMBIT	Transfer unit bit select bit	0 : 16 bits 1 : 8 bits	○	○
DMASL	Repeat transfer mode select bit	0 : Single transfer 1 : Repeat transfer	○	○
DMAS	DMA request bit (Note 1)	0 : DMA not requested 1 : DMA requested	○	○ (Note 2)
DMAE	DMA enable bit	0 : Disabled 1 : Enabled	○	○
DSD	Source address direction select bit (Note 3)	0 : Fixed 1 : Forward	○	○
DAD	Destination address direction select bit (Note 3)	0 : Fixed 1 : Forward	○	○
Nothing is assigned. In an attempt to write to these bits, write “0”. The value, if read, turns out to be “0”.			–	–

Note 1: DMA request can be cleared by resetting the bit.
Note 2: This bit can only be set to “0”.
Note 3: Source address direction select bit and destination address direction select bit cannot be set to “1” simultaneously.

Figure 1.16.3. DMAC register (2)

DMAi source pointer (i = 0, 1)

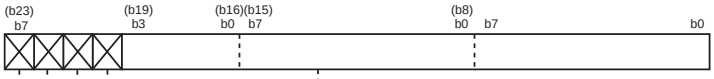

Symbol	Address	When reset
SAR0	0022_{16} to 0020_{16}	Indeterminate
SAR1	0032_{16} to 0030_{16}	Indeterminate

Function	Transfer count specification	R	W
• Source pointer Stores the source address	00000_{16} to $FFFFF_{16}$	○	○
Nothing is assigned. In an attempt to write to these bits, write "0". The value, if read, turns out to be "0".		–	–

DMAi destination pointer (i = 0, 1)

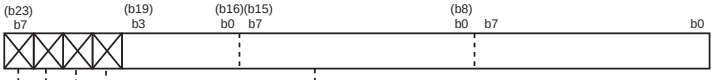

Symbol	Address	When reset
DAR0	0026_{16} to 0024_{16}	Indeterminate
DAR1	0036_{16} to 0034_{16}	Indeterminate

Function	Transfer count specification	R	W
• Destination pointer Stores the destination address	00000_{16} to $FFFFF_{16}$	○	○
Nothing is assigned. In an attempt to write to these bits, write "0". The value, if read, turns out to be "0".		–	–

DMAi transfer counter (i = 0, 1)

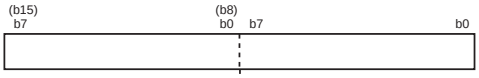

Symbol	Address	When reset
TCR0	0029_{16}, 0028_{16}	Indeterminate
TCR1	0039_{16}, 0038_{16}	Indeterminate

Function	Transfer count specification	R	W
• Transfer counter Set a value one less than the transfer count	0000_{16} to $FFFF_{16}$	○	○

Figure 1.16.4. DMAC register (3)

(1) Transfer cycle

The transfer cycle consists of the bus cycle in which data is read from memory or from the SFR area (source read) and the bus cycle in which the data is written to memory or to the SFR area (destination write). The number of read and write bus cycles depends on the source and destination addresses. In memory expansion mode and microprocessor mode, the number of read and write bus cycles also depends on the level of the BYTE pin. Also, the bus cycle itself is longer when software waits are inserted.

(a) Effect of source and destination addresses

When 16-bit data is transferred on a 16-bit data bus, and the source and destination both start at odd addresses, there are one more source read cycle and destination write cycle than when the source and destination both start at even addresses.

(b) Effect of BYTE pin level

When transferring 16-bit data over an 8-bit data bus (BYTE pin = “H”) in memory expansion mode and microprocessor mode, the 16 bits of data are sent in two 8-bit blocks. Therefore, two bus cycles are required for reading the data and two are required for writing the data. Also, in contrast to when the CPU accesses internal memory, when the DMAC accesses internal memory (internal ROM, internal RAM, and SFR), these areas are accessed using the data size selected by the BYTE pin.

(c) Effect of software wait

When the SFR area or a memory area with a software wait is accessed, the number of cycles is increased for the wait by 1 bus cycle. The length of the cycle is determined by BCLK.

Figure 1.16.5 shows the example of the transfer cycles for a source read. For convenience, the destination write cycle is shown as one cycle and the source read cycles for the different conditions are shown. In reality, the destination write cycle is subject to the same conditions as the source read cycle, with the transfer cycle changing accordingly. When calculating the transfer cycle, remember to apply the respective conditions to both the destination write cycle and the source read cycle. For example (2) in Figure 1.16.5, if data is being transferred in 16-bit units on an 8-bit bus, two bus cycles are required for both the source read cycle and the destination write cycle.

Note 1: M30623(80-pin package), in case of access to the external bus area, can be used only when 8-bit bus mode.

(1) 8-bit transfers
16-bit transfers from even address and the source address is even.

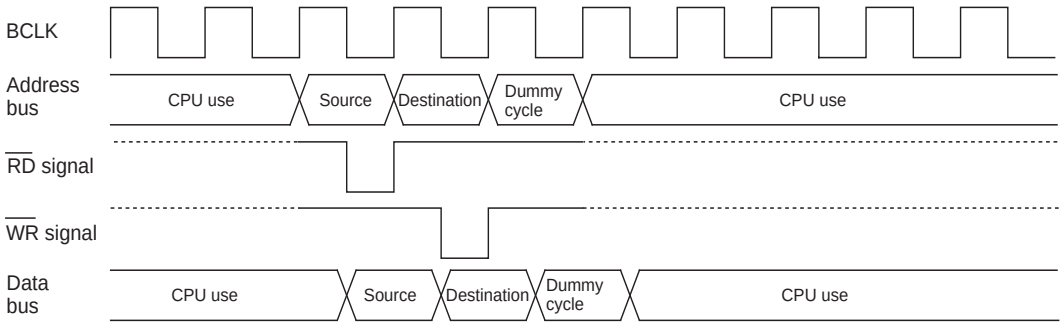

(2) 16-bit transfers and the source address is odd
Transferring 16-bit data on an 8-bit data bus (In this case, there are also two destination write cycles).

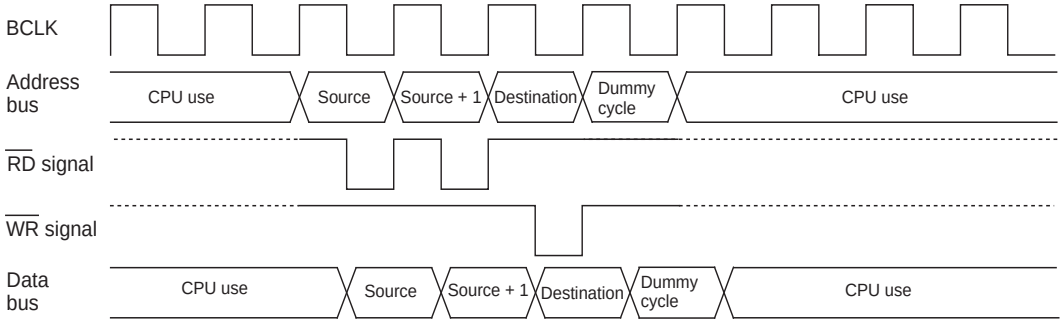

(3) One wait is inserted into the source read under the conditions in (1)

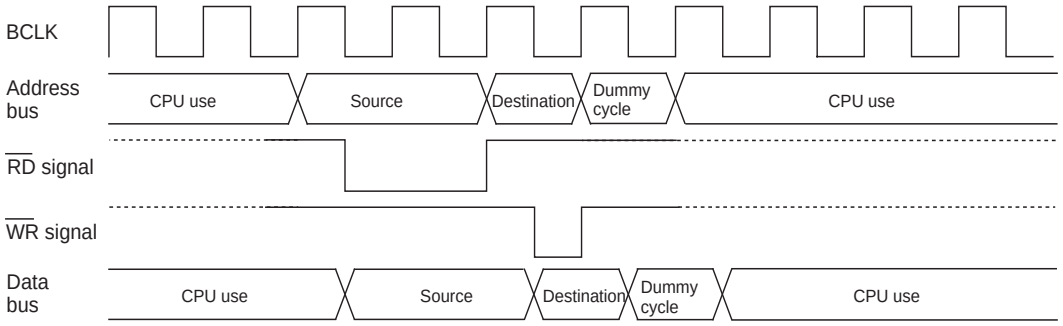

(4) One wait is inserted into the source read under the conditions in (2)
(When 16-bit data is transferred on an 8-bit data bus, there are two destination write cycles).

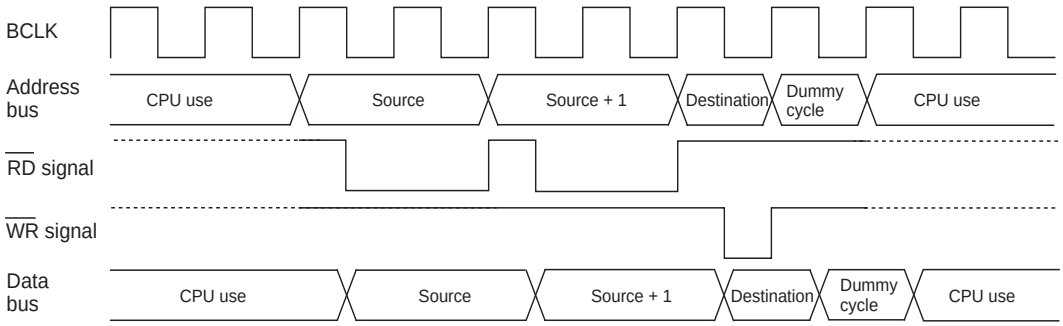

Note 1: The same timing changes occur with the respective conditions at the destination as at the source.
Note 2: M30623(80-pin package), in case of access to the external bus area, can be used only when 8-bit bus mode.

Figure 1.16.5. Example of the transfer cycles for a source read

(2) DMAC transfer cycles

Any combination of even or odd transfer read and write addresses is possible. Table 1.16.2 shows the number of DMAC transfer cycles.

The number of DMAC transfer cycles can be calculated as follows:

No. of transfer cycles per transfer unit = No. of read cycles x j + No. of write cycles x k

Table 1.16.2. No. of DMAC transfer cycles

Transfer unit	Bus width	Access address	Single-chip mode		Memory expansion mode Microprocessor mode	
			No. of read cycles	No. of write cycles	No. of read cycles	No. of write cycles
8-bit transfers (DMBIT= “1”)	16-bit (BYTE= “L”)	Even	1	1	1	1
		Odd	1	1	1	1
	8-bit (BYTE = “H”)	Even	—	—	1	1
		Odd	—	—	1	1
16-bit transfers (DMBIT= “0”)	16-bit (BYTE = “L”)	Even	1	1	1	1
		Odd	2	2	2	2
	8-bit (BYTE = “H”)	Even	—	—	2	2
		Odd	—	—	2	2

Coefficient j, k

Internal memory			External memory		
Internal ROM/RAM No wait	Internal ROM/RAM With wait	SFR area	Separate bus No wait	Separate bus With wait	Multiplex bus
1	2	2	1	2	3

Note 1: M30623(80-pin package), in case of access to the external bus area, can be used only when 8-bit bus mode.

DMA enable bit

Setting the DMA enable bit to "1" makes the DMAC active. The DMAC carries out the following operations at the time data transfer starts immediately after DMAC is turned active.

(1) Reloads the value of one of the source pointer and the destination pointer - the one specified for the forward direction - to the forward direction address pointer.

(2) Reloads the value of the transfer counter reload register to the transfer counter.

Thus overwriting "1" to the DMA enable bit with the DMAC being active carries out the operations given above, so the DMAC operates again from the initial state at the instant "1" is overwritten to the DMA enable bit.

DMA request bit

The DMAC can generate a DMA transfer request signal triggered by a factor chosen in advance out of DMA request factors for each channel.

DMA request factors include the following.

* Factors effected by using the interrupt request signals from the built-in peripheral functions and software DMA factors (internal factors) effected by a program.
* External factors effected by utilizing the input from external interrupt signals.

For the selection of DMA request factors, see the descriptions of the DMAi factor selection register.

The DMA request bit turns to "1" if the DMA transfer request signal occurs regardless of the DMAC's state (regardless of whether the DMA enable bit is set "1" or to "0"). It turns to "0" immediately before data transfer starts.

In addition, it can be set to "0" by use of a program, but cannot be set to "1".

There can be instances in which a change in DMA request factor selection bit causes the DMA request bit to turn to "1". So be sure to set the DMA request bit to "0" after the DMA request factor selection bit is changed.

The DMA request bit turns to "1" if a DMA transfer request signal occurs, and turns to "0" immediately before data transfer starts. If the DMAC is active, data transfer starts immediately, so the value of the DMA request bit, if read by use of a program, turns out to be "0" in most cases. To examine whether the DMAC is active, read the DMA enable bit.

Here follows the timing of changes in the DMA request bit.

(1) Internal factors

Except the DMA request factors triggered by software, the timing for the DMA request bit to turn to "1" due to an internal factor is the same as the timing for the interrupt request bit of the interrupt control register to turn to "1" due to several factors.

Turning the DMA request bit to "1" due to an internal factor is timed to be effected immediately before the transfer starts.

(2) External factors

An external factor is a factor caused to occur by the leading edge of input from the INTi pin (i depends on which DMAC channel is used).

Selecting the INTi pins as external factors using the DMA request factor selection bit causes input from these pins to become the DMA transfer request signals.

The timing for the DMA request bit to turn to "1" when an external factor is selected synchronizes with the signal's edge applicable to the function specified by the DMA request factor selection bit (synchronizes with the trailing edge of the input signal to each INTi pin, for example).

With an external factor selected, the DMA request bit is timed to turn to "0" immediately before data transfer starts similarly to the state in which an internal factor is selected.

(3) The priorities of channels and DMA transfer timing

If a DMA transfer request signal falls on a single sampling cycle (a sampling cycle means one period from the leading edge to the trailing edge of BCLK), the DMA request bits of applicable channels concurrently turn to "1". If the channels are active at that moment, DMA0 is given a high priority to start data transfer. When DMA0 finishes data transfer, it gives the bus right to the CPU. When the CPU finishes single bus access, then DMA1 starts data transfer and gives the bus right to the CPU.

An example in which DMA transfer is carried out in minimum cycles at the time when DMA transfer request signals due to external factors concurrently occur.

Figure 1.16.6 An example of DMA transfer effected by external factors.

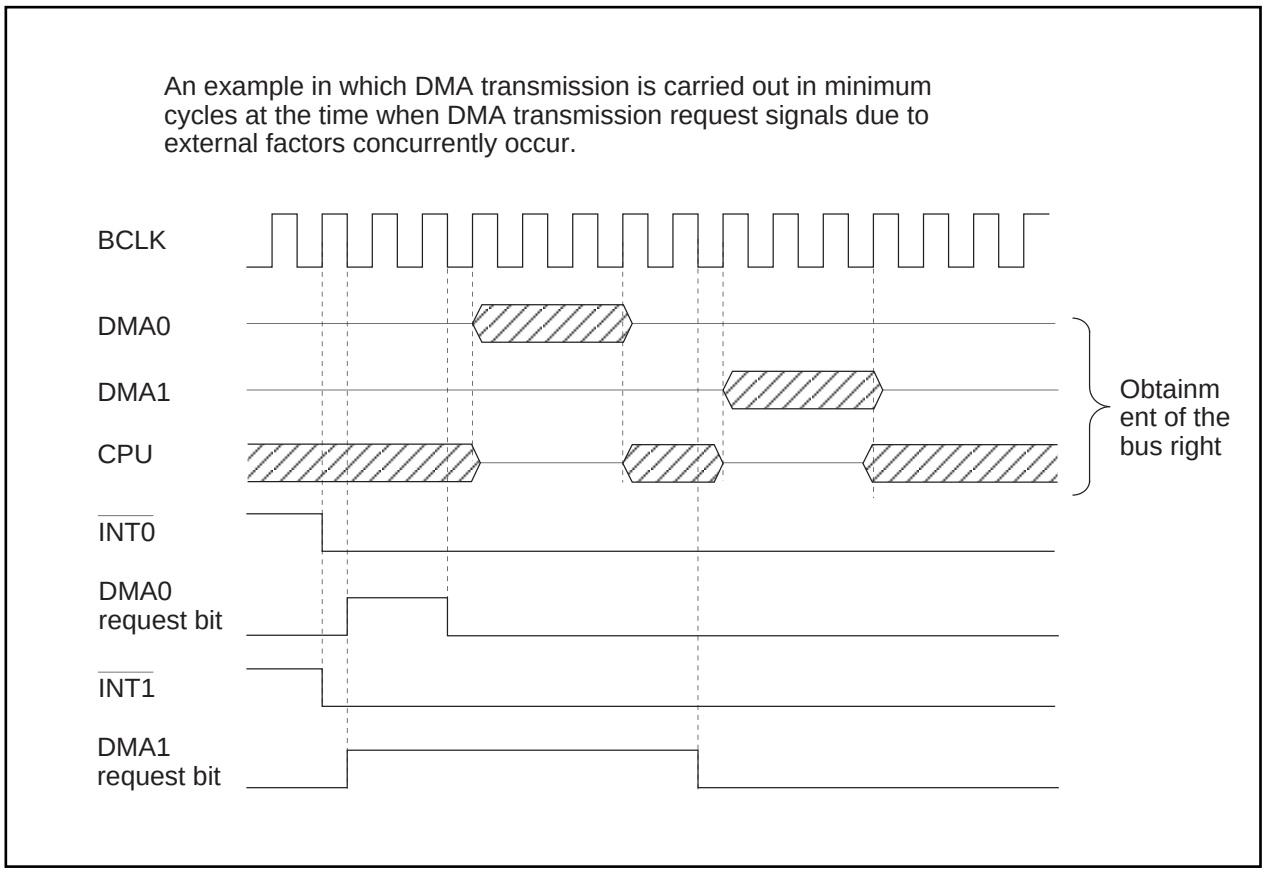

Figure 1.16.6. An example of DMA transfer effected by external factors

Timer

There are eleven 16-bit timers. These timers can be classified by function into timers A (five) and timers B (six). All these timers function independently. Figures 1.17.1 and 1.17.2 show the block diagram of timers.

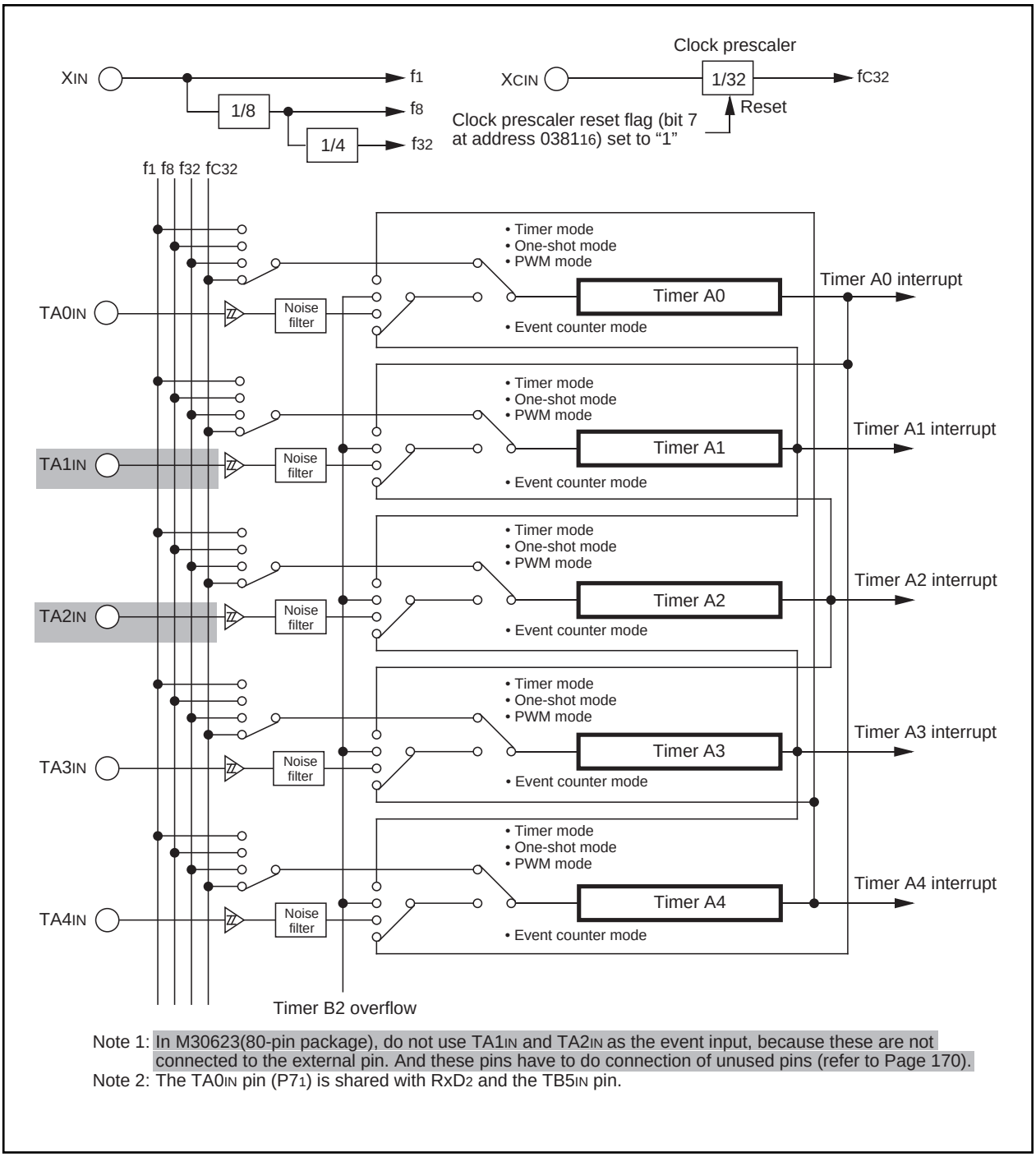

Note 1: In M30623(80-pin package), do not use TA1IN and TA2IN as the event input, because these are not connected to the external pin. And these pins have to do connection of unused pins (refer to Page 170).
Note 2: The TA0IN pin (P71) is shared with RxD2 and the TB5IN pin.

Figure 1.17.1. Timer A block diagram

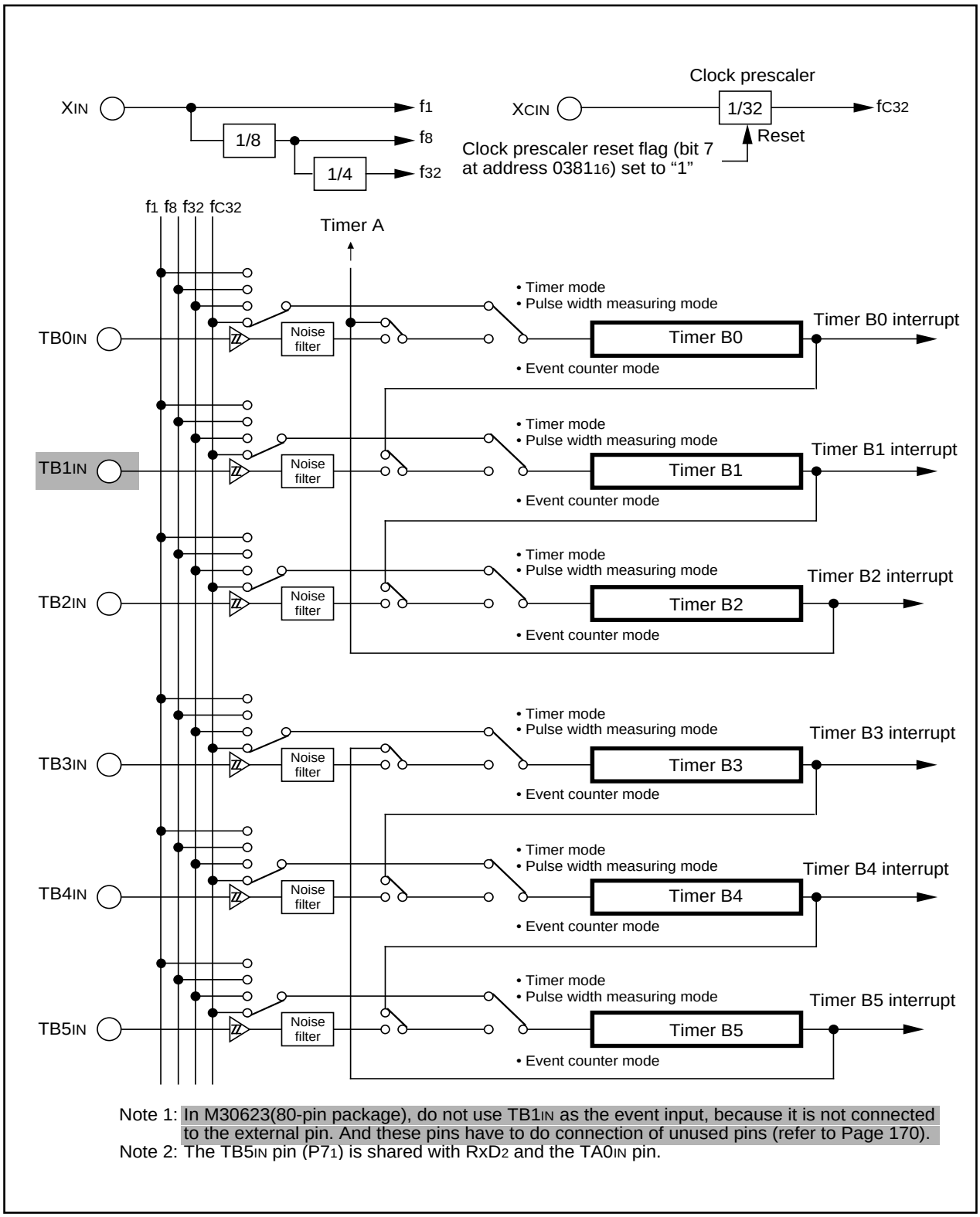

Note 1: In M30623(80-pin package), do not use TB1IN as the event input, because it is not connected to the external pin. And these pins have to do connection of unused pins (refer to Page 170).
Note 2: The TB5IN pin (P71) is shared with RxD2 and the TA0IN pin.

Figure 1.17.2. Timer B block diagram

Timer A

Figure 1.17.3 shows the block diagram of timer A. Figures 1.17.4 to 1.17.6 show the timer A-related registers.

Except in event counter mode, timers A0 through A4 all have the same function. Use the timer Ai mode register (i = 0 to 4) bits 0 and 1 to choose the desired mode. But M30623(80-pin package), timer A1 and A2 have no I/O pin, so it operate as only internal timer.

Timer A has the four operation modes listed as follows:

- Timer mode: The timer counts an internal count source.
- Event counter mode: The timer counts pulses from an external source or a timer over flow.
- One-shot timer mode: The timer stops counting when the count reaches "0000$_{16}$".
- Pulse width modulation (PWM) mode: The timer outputs pulses of a given width.

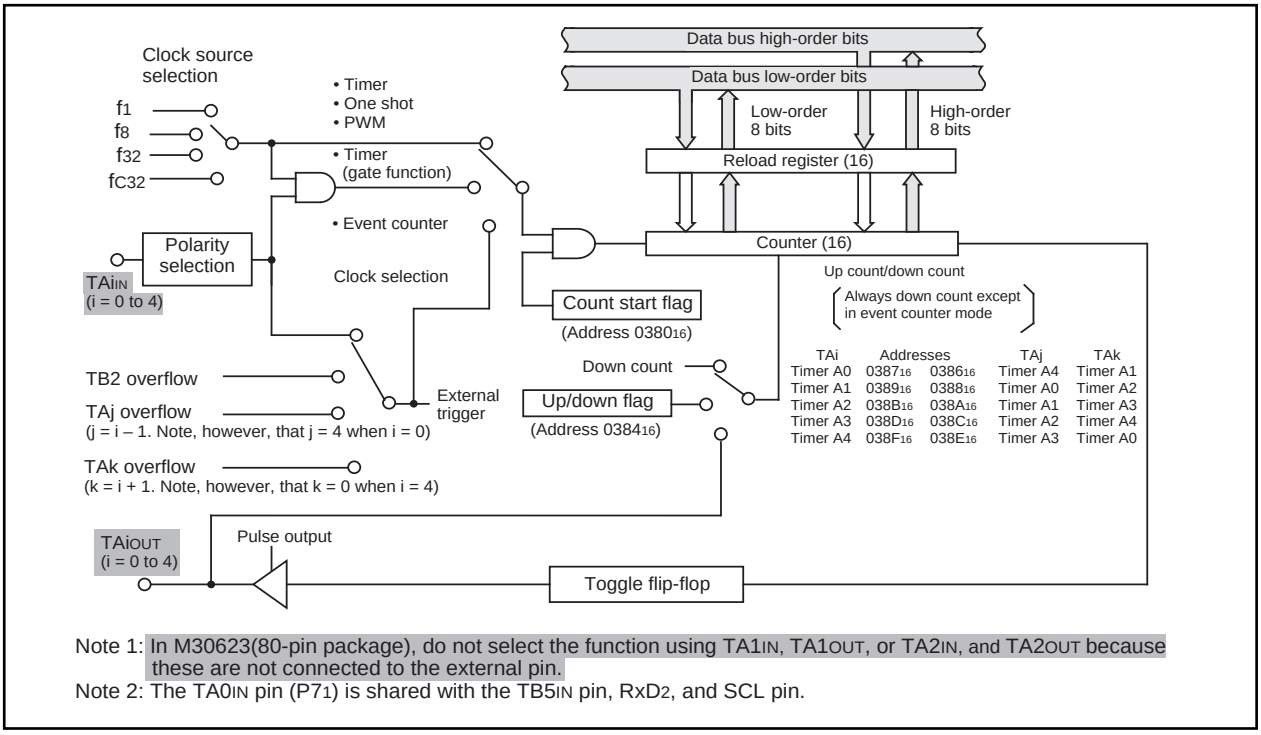

Note 1: In M30623(80-pin package), do not select the function using TA1IN, TA1OUT, or TA2IN, and TA2OUT because these are not connected to the external pin.
Note 2: The TA0IN pin (P7$_1$) is shared with the TB5IN pin, RxD$_2$, and SCL pin.

Figure 1.17.3. Block diagram of timer A

Timer Ai mode register

Symbol	Address	When reset
TAiMR(i=0 to 4)	0396$_{16}$ to 039A$_{16}$	00$_{16}$

b7 b6 b5 b4 b3 b2 b1 b0

Bit symbol	Bit name	Function	R	W
TMOD0	Operation mode select bit	b1 b0 0 0 : Timer mode 0 1 : Event counter mode 1 0 : One-shot timer mode 1 1 : Pulse width modulation (PWM) mode	○	○
TMOD1			○	○
MR0	Function varies with each operation mode		○	○
MR1			○	○
MR2			○	○
MR3			○	○
TCK0	Count source select bit (Function varies with each operation mode)		○	○
TCK1			○	○

Figure 1.17.4. Timer A-related registers (1)

Timer Ai register (Note)

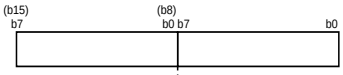

Symbol	Address	When reset
TA0	0387_{16},0386_{16}	Indeterminate
TA1	0389_{16},0388_{16}	Indeterminate
TA2	$038B_{16}$,$038A_{16}$	Indeterminate
TA3	$038D_{16}$,$038C_{16}$	Indeterminate
TA4	$038F_{16}$,$038E_{16}$	Indeterminate

Function	Values that can be set	R	W
• Timer mode Counts an internal count source	0000_{16} to $FFFF_{16}$	O	O
• Event counter mode Counts pulses from an external source or timer overflow	0000_{16} to $FFFF_{16}$	O	O
• One-shot timer mode Counts a one shot width	0000_{16} to $FFFF_{16}$	X	O
• Pulse width modulation mode (16-bit PWM) Functions as a 16-bit pulse width modulator	0000_{16} to $FFFE_{16}$	X	O
• Pulse width modulation mode (8-bit PWM) Timer low-order address functions as an 8-bit prescaler and high-order address functions as an 8-bit pulse width modulator	00_{16} to FE_{16} (Both high-order and low-order addresses)	X	O

Note: Read and write data in 16-bit units.

Count start flag

Symbol	Address	When reset
TABSR	0380_{16}	00_{16}

Bit symbol	Bit name	Function	R	W
TA0S	Timer A0 count start flag	0 : Stops counting 1 : Starts counting	O	O
TA1S	Timer A1 count start flag		O	O
TA2S	Timer A2 count start flag		O	O
TA3S	Timer A3 count start flag		O	O
TA4S	Timer A4 count start flag		O	O
TB0S	Timer B0 count start flag		O	O
TB1S	Timer B1 count start flag		O	O
TB2S	Timer B2 count start flag		O	O

Up/down flag

Symbol	Address	When reset
UDF	0384_{16}	00_{16}

Bit symbol	Bit name	Function	R	W
TA0UD	Timer A0 up/down flag	0 : Down count 1 : Up count This specification becomes valid when the up/down flag content is selected for up/down switching cause	O	O
TA1UD	Timer A1 up/down flag		O	O
TA2UD	Timer A2 up/down flag		O	O
TA3UD	Timer A3 up/down flag		O	O
TA4UD	Timer A4 up/down flag		O	O
TA2P	Timer A2 two-phase pulse signal processing select bit (Note 1)	0 : two-phase pulse signal processing disabled 1 : two-phase pulse signal processing enabled When not using the two-phase pulse signal processing function, set the select bit to "0"	X	O
TA3P	Timer A3 two-phase pulse signal processing select bit		X	O
TA4P	Timer A4 two-phase pulse signal processing select bit		X	O

Note 1: M30623(80-pin package) does not have I/O pins for TA2, so set this bit to "0".

Figure 1.17.5. Timer A-related registers (2)

One-shot start flag

Symbol	Address	When reset
ONSF	0382_{16}	$00X00000_2$

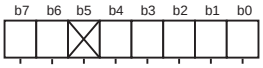

Bit symbol	Bit name	Function	R	W
TA0OS	Timer A0 one-shot start flag	1 : Timer start When read, the value is "0"	○	○
TA1OS	Timer A1 one-shot start flag		○	○
TA2OS	Timer A2 one-shot start flag		○	○
TA3OS	Timer A3 one-shot start flag		○	○
TA4OS	Timer A4 one-shot start flag		○	○
Nothing is assigned. In an attempt to write to this bit, write "0". The value, if read, turns out to be indeterminate.			—	—
TA0TGL	Timer A0 event/trigger select bit	b7 b6 0 0 : Input on TA0IN is selected (Note) 0 1 : TB2 overflow is selected 1 0 : TA4 overflow is selected 1 1 : TA1 overflow is selected	○	○
TA0TGH			○	○

Note: Set the corresponding port direction register to "0".

Trigger select register

Symbol	Address	When reset
TRGSR	0383_{16}	00_{16}

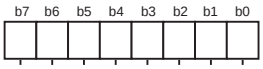

Bit symbol	Bit name	Function	R	W
TA1TGL	Timer A1 event/trigger select bit	b1 b0 0 0 : Input on TA1IN is selected (Note 1, 2) 0 1 : TB2 overflow is selected 1 0 : TA0 overflow is selected 1 1 : TA2 overflow is selected	○	○
TA1TGH			○	○
TA2TGL	Timer A2 event/trigger select bit	b3 b2 0 0 : Input on TA2IN is selected (Note 1, 2) 0 1 : TB2 overflow is selected 1 0 : TA1 overflow is selected 1 1 : TA3 overflow is selected	○	○
TA2TGH			○	○
TA3TGL	Timer A3 event/trigger select bit	b5 b4 0 0 : Input on TA3IN is selected (Note 1) 0 1 : TB2 overflow is selected 1 0 : TA2 overflow is selected 1 1 : TA4 overflow is selected	○	○
TA3TGH			○	○
TA4TGL	Timer A4 event/trigger select bit	b7 b6 0 0 : Input on TA4IN is selected (Note 1) 0 1 : TB2 overflow is selected 1 0 : TA3 overflow is selected 1 1 : TA0 overflow is selected	○	○
TA4TGH			○	○

Note 1: Set the corresponding port direction register to "0".
Note 2: In M30623(80-pin package), do not select the function using TA1IN and TA2IN, because these are not connected to the external pin.

Clock prescaler reset flag

Symbol	Address	When reset
CPSRF	0381_{16}	$0XXXXXXX_2$

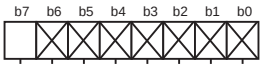

Bit symbol	Bit name	Function	R	W
Nothing is assigned. In an attempt to write to these bits, write "0". The value, if read, turns out to be indeterminate.			—	—
CPSR	Clock prescaler reset flag	0 : No effect 1 : Prescaler is reset (When read, the value is "0")	○	○

Figure 1.17.6. Timer A-related registers (3)

(1) Timer mode

In this mode, the timer counts an internally generated count source. (See Table 1.17.1.) Figure 1.17.7 shows the timer Ai mode register in timer mode.

Table 1.17.1. Specifications of timer mode

Item	Specification
Count source	f_1, f_8, f_{32}, f_{C32}
Count operation	• Down count • When the timer underflows, it reloads the reload register contents before continuing counting
Divide ratio	1/(n+1) n : Set value
Count start condition	Count start flag is set (= 1)
Count stop condition	Count start flag is reset (= 0)
Interrupt request generation timing	When the timer underflows
TAi_{IN} pin function	Programmable I/O port or gate input
TAi_{OUT} pin function	Programmable I/O port or pulse output
Read from timer	Count value can be read out by reading timer Ai register
Write to timer	• When counting stopped When a value is written to timer Ai register, it is written to both reload register and counter • When counting in progress When a value is written to timer Ai register, it is written to only reload register (Transferred to counter at next reload time)
Select function	• Gate function Counting can be started and stopped by the TAi_{IN} pin's input signal • Pulse output function Each time the timer underflows, the TAi_{OUT} pin's polarity is reversed

Note 1: M30623(80-pin package) does not have I/O pins(TAi_{IN},TAi_{OUT}) for timer A1 and A2.

Timer Ai mode register

b7	b6	b5	b4	b3	b2	b1	b0
		0				0	0

Symbol: TAiMR(i=0 to 4) Address: 039_{16} to $039A_{16}$ When reset: 00_{16}

Bit symbol	Bit name	Function	R	W
TMOD0	Operation mode select bit	b1 b0 0 0 : Timer mode	○	○
TMOD1			○	○
MR0	Pulse output function select bit (Note 4)	0 : Pulse is not output (TAi_{OUT} pin is a normal port pin) 1 : Pulse is output (Note 1) (TAi_{OUT} pin is a pulse output pin)	○	○
MR1	Gate function select bit (Note 4)	b4 b3 0 X (Note 2): Gate function not available (TAi_{IN} pin is a normal port pin) 1 0 : Timer counts only when TAi_{IN} pin is held "L" (Note 3) 1 1 : Timer counts only when TAi_{IN} pin is held "H" (Note 3)	○	○
MR2			○	○
MR3	0 (Must always be fixed to "0" in timer mode)		○	○
TCK0	Count source select bit	b7 b6 0 0 : f_1 0 1 : f_8 1 0 : f_{32} 1 1 : f_{C32}	○	○
TCK1			○	○

Note 1: The settings of the corresponding port register and port direction register are invalid.
Note 2: The bit can be "0" or "1".
Note 3: Set the corresponding port direction register to "0".
Note 4: In timer A1 and A2 mode register of M30623(80-pin package), set these bits to "0".

Figure 1.17.7. Timer Ai mode register in timer mode

(2) Event counter mode

In this mode, the timer counts an external signal or an internal timer's overflow. Timers A0 and A1 can count a single-phase external signal. Timers A2, A3, and A4 can count a single-phase and a two-phase external signal. Table 1.17.2 lists timer specifications when counting a single-phase external signal. Figure 1.17.8 shows the timer Ai mode register in event counter mode.

Table 1.17.3 lists timer specifications when counting a two-phase external signal. Figure 1.17.9 shows the timer Ai mode register in event counter mode.

Table 1.17.2. Timer specifications in event counter mode (when not processing two-phase pulse signal)

Item	Specification
Count source	• External signals input to TAiIN pin (effective edge can be selected by software) • TB2 overflow, TAj overflow
Count operation	• Up count or down count can be selected by external signal or software • When the timer overflows or underflows, it reloads the reload register con tents before continuing counting (Note)
Divide ratio	1/ (FFFF16 - n + 1) for up count 1/ (n + 1) for down count n : Set value
Count start condition	Count start flag is set (= 1)
Count stop condition	Count start flag is reset (= 0)
Interrupt request generation timing	The timer overflows or underflows
TAiIN pin function	Programmable I/O port or count source input
TAiOUT pin function	Programmable I/O port, pulse output, or up/down count select input
Read from timer	Count value can be read out by reading timer Ai register
Write to timer	• When counting stopped When a value is written to timer Ai register, it is written to both reload register and counter • When counting in progress When a value is written to timer Ai register, it is written to only reload register (Transferred to counter at next reload time)
Select function	• Free-run count function Even when the timer overflows or underflows, the reload register content is not reloaded to it • Pulse output function Each time the timer overflows or underflows, the TAiOUT pin's polarity is reversed

Note 1: This does not apply when the free-run function is selected.

Note 2: M30623(80-pin package) does not have I/O pins(TAiIN,TAiOUT) for timer A1 and A2.

Timer Ai mode register

b7	b6	b5	b4	b3	b2	b1	b0
		0				0	1

Symbol	Address	When reset
TAiMR(i = 0, 1)	0396₁₆, 0397₁₆	00₁₆

Bit symbol	Bit name	Function	R	W
TMOD0	Operation mode select bit	b1 b0 0 1 : Event counter mode (Note 1)	○	○
TMOD1			○	○
MR0	Pulse output function select bit (Note 5)	0 : Pulse is not output (TAiOUT pin is a normal port pin) 1 : Pulse is output (Note 2) (TAiOUT pin is a pulse output pin)	○	○
MR1	Count polarity select bit (Note 3,Note 5)	0 : Counts external signal's falling edge 1 : Counts external signal's rising edge	○	○
MR2	Up/down switching cause select bit (Note 5)	0 : Up/down flag's content 1 : TAiOUT pin's input signal (Note 4)	○	○
MR3	0 (Must always be fixed to "0" in event counter mode)		○	○
TCK0	Count operation type select bit	0 : Reload type 1 : Free-run type	○	○
TCK1	Invalid in event counter mode Can be "0" or "1"		○	○

Note 1: In event counter mode, the count source is selected by the event / trigger select bit (addresses 0382₁₆ and 0383₁₆).
Note 2: The settings of the corresponding port register and port direction register are invalid.
Note 3: Valid only when counting an external signal.
Note 4: When an "L" signal is input to the TAiOUT pin, the downcount is activated. When "H", the upcount is activated. Set the corresponding port direction register to "0".
Note 5: In Timer A1 and A2 mode register of M30623(80-pin package), set these bits to "0".

Figure 1.17.8. Timer Ai mode register in event counter mode

Table 1.17.3. Timer specifications in event counter mode (when processing two-phase pulse signal with timers A2, A3, and A4)

Item	Specification
Count source	• Two-phase pulse signals input to TAiIN or TAiOUT pin
Count operation	• Up count or down count can be selected by two-phase pulse signal • When the timer overflows or underflows, the reload register content is reloaded and the timer starts over again (Note)
Divide ratio	1/ ($FFFF_{16}$ - n + 1) for up count 1/ (n + 1) for down count n : Set value
Count start condition	Count start flag is set (= 1)
Count stop condition	Count start flag is reset (= 0)
Interrupt request generation timing	Timer overflows or underflows
TAiIN pin function	Two-phase pulse input
TAiOUT pin function	Two-phase pulse input
Read from timer	Count value can be read out by reading timer A2, A3, or A4 register
Write to timer	• When counting stopped When a value is written to timer A2, A3, or A4 register, it is written to both reload register and counter • When counting in progress When a value is written to timer A2, A3, or A4 register, it is written to only reload register. (Transferred to counter at next reload time.)
Select function	• Normal processing operation The timer counts up rising edges or counts down falling edges on the TAiIN pin when input signal on the TAiOUT pin is “H” 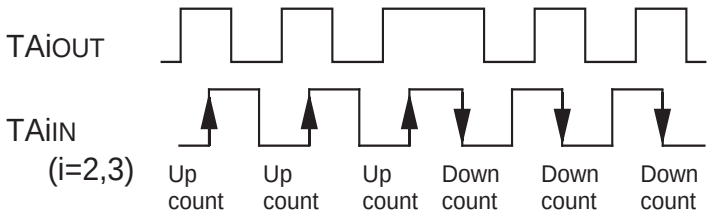 • Multiply-by-4 processing operation If the phase relationship is such that the TAiIN pin goes “H” when the input signal on the TAiOUT pin is “H”, the timer counts up rising and falling edges on the TAiOUT and TAiIN pins. If the phase relationship is such that the TAiIN pin goes “L” when the input signal on the TAiOUT pin is “H”, the timer counts down rising and falling edges on the TAiOUT and TAiIN pins. 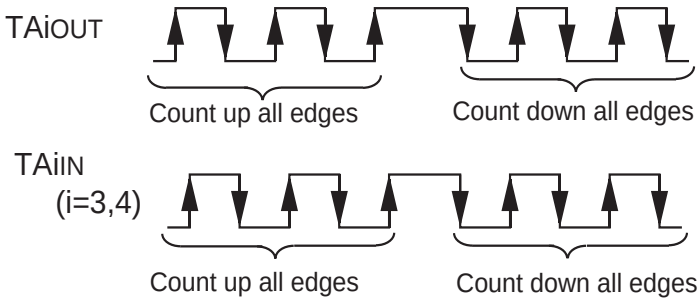

Note 1: This does not apply when the free-run function is selected.

Note 2: M30623(80-pin package) does not have I/O pins(TAiIN,TAiOUT) for timer A1 and A2.

Timer Ai mode register
(When not using two-phase pulse signal processing)

b7	b6	b5	b4	b3	b2	b1	b0
		0				0	1

Symbol	Address	When reset
TAiMR(i = 2 to 4)	039_{16} to $039A_{16}$	00_{16}

Bit symbol	Bit name	Function	R	W
TMOD0	Operation mode select bit	b1 b0 0 1 : Event counter mode	○	○
TMOD1			○	○
MR0	Pulse output function select bit (Note 5)	0 : Pulse is not output (TAiOUT pin is a normal port pin) 1 : Pulse is output (Note 1) (TAiOUT pin is a pulse output pin)	○	○
MR1	Count polarity select bit (Note 2,Note 5)	0 : Counts external signal's falling edges 1 : Counts external signal's rising edges	○	○
MR2	Up/down switching cause select bit (Note 5)	0 : Up/down flag's content 1 : TAiOUT pin's input signal (Note 3)	○	○
MR3	0 : (Must always be “0” in event counter mode)		○	○
TCK0	Count operation type select bit	0 : Reload type 1 : Free-run type	○	○
TCK1	Two-phase pulse signal processing operation select bit (Note 4)	0 : Normal processing operation 1 : Multiply-by-4 processing operation	○	○

Note 1: The settings of the corresponding port register and port direction register are invalid.
Note 2: This bit is valid when only counting an external signal.
Note 3: Set the corresponding port direction register to “0”.
Note 4: This bit is valid for the timer A3 mode register.
For timer A2 and A4 mode registers, this bit can be “0 ”or “1”.
Note 5: Set these bits to “0”, in timer A2 mode register of M30623(80-pin package).

Timer Ai mode register
(When using two-phase pulse signal processing)

b7	b6	b5	b4	b3	b2	b1	b0
		0	1	0	0	0	1

Symbol	Address	When reset
TAiMR(i = 2 to 4)	039_{16} to $039A_{16}$	00_{16}

Bit symbol	Bit name	Function	R	W
TMOD0	Operation mode select bit	b1 b0 0 1 : Event counter mode	○	○
TMOD1			○	○
MR0	0 (Must always be “0” when using two-phase pulse signal processing)		○	○
MR1	0 (Must always be “0” when using two-phase pulse signal processing)		○	○
MR2	1 (Must always be “1” when using two-phase pulse signal processing)		○	○
MR3	0 (Must always be “0” when using two-phase pulse signal processing)		○	○
TCK0	Count operation type select bit	0 : Reload type 1 : Free-run type	○	○
TCK1	Two-phase pulse processing operation select bit (Note 1)(Note 2)	0 : Normal processing operation 1 : Multiply-by-4 processing operation	○	○

Note 1: This bit is valid for timer A3 mode register.
For timer A2 and A4 mode registers, this bit can be “0” or “1”.
Note 2: When performing two-phase pulse signal processing, make sure the two-phase pulse signal processing operation select bit (address 038_{16}) is set to “1”. Also, always be sure to set the event/trigger select bit (addresses 038_{16} and 038_{16}) to “00”.
Note 3: In M30623(80-pin package), do not use timer A2 for the two-phase pulse signal processing.

Figure 1.17.9. Timer Ai mode register in event counter mode

(3) One-shot timer mode

In this mode, the timer operates only once. (See Table 1.17.4.) When a trigger occurs, the timer starts up and continues operating for a given period. Figure 1.17.10 shows the timer Ai mode register in one-shot timer mode.

Table1.17.4. Timer specifications in one-shot timer mode

Item	Specification
Count source	f_1, f_8, f_{32}, f_{C32}
Count operation	• The timer counts down • When the count reaches 0000_{16}, the timer stops counting after reloading a new count • If a trigger occurs when counting, the timer reloads a new count and restarts counting
Divide ratio	1/n n : Set value
Count start condition	• An external trigger is input • The timer overflows • The one-shot start flag is set (= 1)
Count stop condition	• A new count is reloaded after the count has reached 0000_{16} • The count start flag is reset (= 0)
Interrupt request generation timing	The count reaches 0000_{16}
TAi_{IN} pin function	Programmable I/O port or trigger input
TAi_{OUT} pin function	Programmable I/O port or pulse output
Read from timer	When timer Ai register is read, it indicates an indeterminate value
Write to timer	• When counting stopped When a value is written to timer Ai register, it is written to both reload register and counter • When counting in progress When a value is written to timer Ai register, it is written to only reload register (Transferred to counter at next reload time)

Note 1: M30623(80-pin package) does not have I/O pins(TAi_{IN},TAi_{OUT}) for timer A1 and A2.

Timer Ai mode register

b7	b6	b5	b4	b3	b2	b1	b0
		0				1	0

Symbol	Address	When reset
TAiMR(i = 0 to 4)	0396_{16} to $039A_{16}$	00_{16}

Bit symbol	Bit name	Function	R	W
TMOD0	Operation mode select bit	b1 b0 1 0 : One-shot timer mode	○	○
TMOD1			○	○
MR0	Pulse output function select bit (Note 4)	0 : Pulse is not output (TAi_{OUT} pin is a normal port pin) 1 : Pulse is output (Note 1) (TAi_{OUT} pin is a pulse output pin)	○	○
MR1	External trigger select bit (Note 2) (Note 4)	0 : Falling edge of TAi_{IN} pin's input signal (Note 3) 1 : Rising edge of TAi_{IN} pin's input signal (Note 3)	○	○
MR2	Trigger select bit	0 : One-shot start flag is valid 1 : Selected by event/trigger select register	○	○
MR3	0 (Must always be "0" in one-shot timer mode)		○	○
TCK0	Count source select bit	b7 b6 0 0 : f_1 0 1 : f_8 1 0 : f_{32} 1 1 : f_{C32}	○	○
TCK1			○	○

Note 1: The settings of the corresponding port register and port direction register are invalid.
Note 2: Valid only when the TAi_{IN} pin is selected by the event/trigger select bit (addresses 0382_{16} and 0383_{16}). If timer overflow is selected, this bit can be "1" or "0".
Note 3: Set the corresponding port direction register to "0".
Note 4: Set these bits to "0", in timer A1 and A2 mode register of M30623(80-pin package).

Figure 1.17.10. Timer Ai mode register in one-shot timer mode

(4) Pulse width modulation (PWM) mode

In this mode, the timer outputs pulses of a given width in succession. (See Table 1.17.5.) In this mode, the counter functions as either a 16-bit pulse width modulator or an 8-bit pulse width modulator. Figure 1.17.11 shows the timer Ai mode register in pulse width modulation mode. Figure 1.17.12 shows the example of how a 16-bit pulse width modulator operates. Figure 1.17.13 shows the example of how an 8-bit pulse width modulator operates.

Table 1.17.5. Timer specifications in pulse width modulation mode

Item	Specification
Count source	f_1, f_8, f_{32}, f_{C32}
Count operation	• The timer counts down (operating as an 8-bit or a 16-bit pulse width modulator) • The timer reloads a new count at a rising edge of PWM pulse and continues counting • The timer is not affected by a trigger that occurs when counting
16-bit PWM	• High level width n / fi n : Set value • Cycle time $(2^{16}-1)$ / fi fixed
8-bit PWM	• High level width n×(m+1) / fi n : values set to timer Ai register's high-order address • Cycle time (2^8-1)× (m+1) / fi m : values set to timer Ai register's low-order address
Count start condition	• External trigger is input • The timer overflows • The count start flag is set (= 1)
Count stop condition	• The count start flag is reset (= 0)
Interrupt request generation timing	PWM pulse goes "L"
TAi_{IN} pin function	Programmable I/O port or trigger input
TAi_{OUT} pin function	Pulse output
Read from timer	When timer Ai register is read, it indicates an indeterminate value
Write to timer	• When counting stopped When a value is written to timer Ai register, it is written to both reload register and counter • When counting in progress When a value is written to timer Ai register, it is written to only reload register (Transferred to counter at next reload time)

Note 1: M30623(80-pin package) does not have I/O pins(TAi_{IN},TAi_{OUT}) for timer A1 and A2.

Timer Ai mode register

b7	b6	b5	b4	b3	b2	b1	b0
					1	1	1

Symbol	Address	When reset
TAiMR(i=0 to 4)	039_{16} to $039A_{16}$	00_{16}

Bit symbol	Bit name	Function	R	W
TMOD0	Operation mode select bit	b1 b0 1 1 : PWM mode	○	○
TMOD1			○	○
MR0	1 (Must always be "1" in PWM mode) (Note 3)		○	○
MR1	External trigger select bit (Note 1) (Note 3)	0: Falling edge of TAi_{IN} pin's input signal (Note 2) 1: Rising edge of TAi_{IN} pin's input signal (Note 2)	○	○
MR2	Trigger select bit	0: Count start flag is valid 1: Selected by event/trigger select register	○	○
MR3	16/8-bit PWM mode select bit	0: Functions as a 16-bit pulse width modulator 1: Functions as an 8-bit pulse width modulator	○	○
TCK0	Count source select bit	b7 b6 0 0 : f_1 0 1 : f_8 1 0 : f_{32} 1 1 : f_{C32}	○	○
TCK1			○	○

Note 1: Valid only when the TAi_{IN} pin is selected by the event/trigger select bit (addresses 0382_{16} and 0383_{16}). If timer overflow is selected, this bit can be "1" or "0".
Note 2: Set the corresponding port direction register to "0".
Note 3: Set these bits to "0", in timer A1 and A2 mode register of M30623(80-pin package).

Figure 1.17.11. Timer Ai mode register in pulse width modulation mode

Condition : Reload register = 0003$_{16}$, when external trigger (rising edge of TAiIN pin input signal) is selected

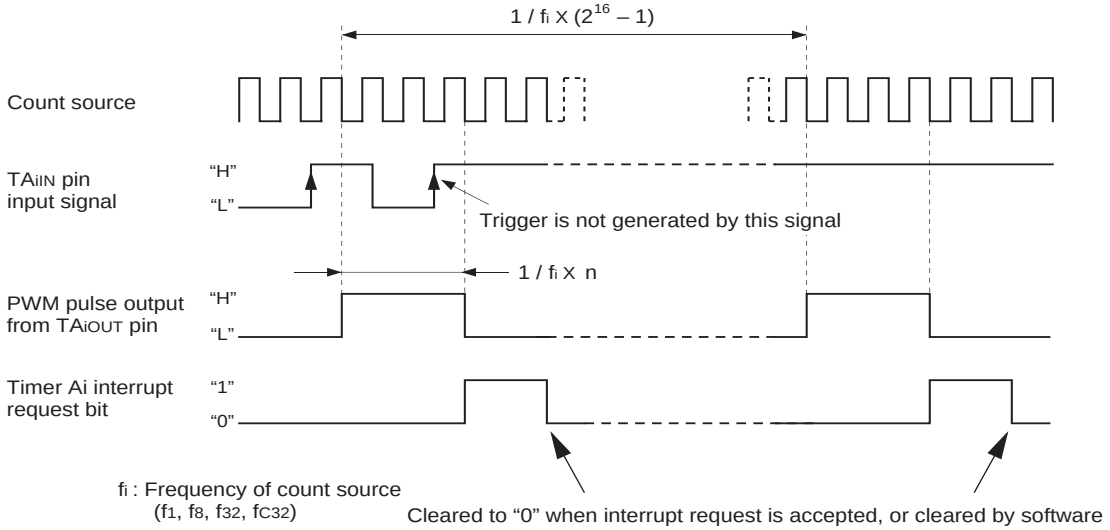

Note 1: M30623(80-pin package) does not have I/O pins(TAiIN,TAiOUT) for timer A1 and A2.
Note 2: n = 0000$_{16}$ to FFFE$_{16}$.

Figure 1.17.12. Example of how a 16-bit pulse width modulator operates

Condition : Reload register high-order 8 bits = 02$_{16}$
Reload register low-order 8 bits = 02$_{16}$
External trigger (falling edge of TAiIN pin input signal) is selected

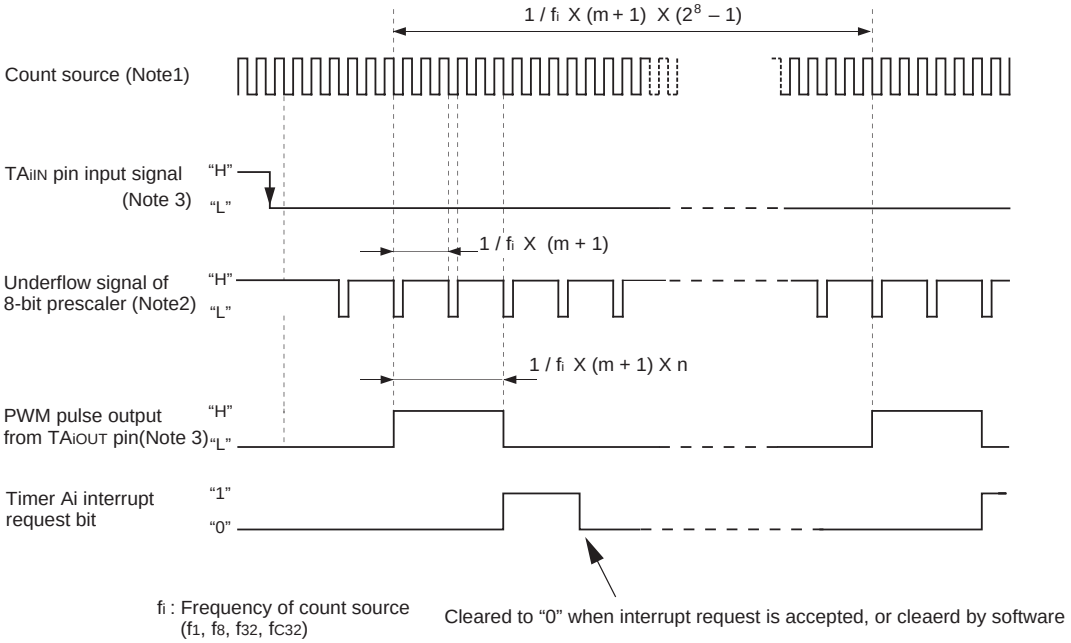

Note 1: The 8-bit prescaler counts the count source.
Note 2: The 8-bit pulse width modulator counts the 8-bit prescaler's underflow signal.
Note 3: M30623(80-pin package) does not have no I/O pins(TAiIN,TAiOUT) for timer A1 and A2.
Note 4: m = 00$_{16}$ to FE$_{16}$; n = 00$_{16}$ to FE$_{16}$.

Figure 1.17.13. Example of how an 8-bit pulse width modulator operates

Timer B

Figure 1.17.14 shows the block diagram of timer B. Figures 1.17.15 and 1.17.16 show the timer B-related registers.

Use the timer Bi mode register (i = 0 to 2) bits 0 and 1 to choose the desired mode.

Timer B has three operation modes listed as follows:

- Timer mode: The timer counts an internal count source.
- Event counter mode: The timer counts pulses from an external source or a timer overflow.
- Pulse period/pulse width measuring mode: The timer measures an external signal's pulse period or pulse width.

But, M30623(80-pin package), timer B1 has no input pin, so funcs as the internal timer.

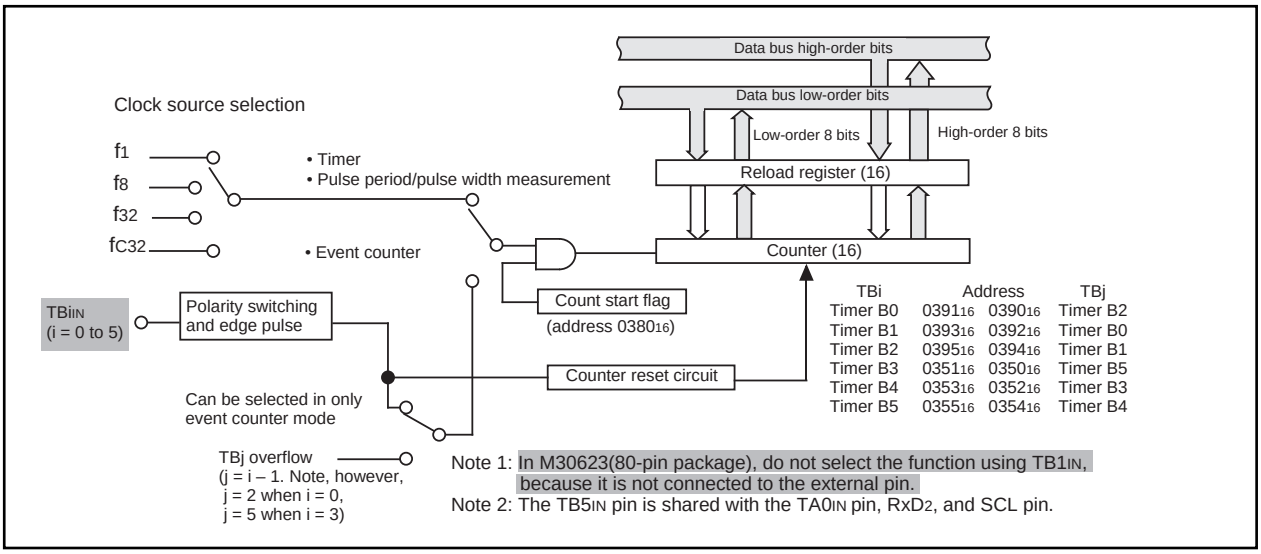

Figure 1.17.14. Block diagram of timer B

Timer Bi mode register

b7	b6	b5	b4	b3	b2	b1	b0

Symbol	Address	When reset
TBiMR(i = 0 to 5)	039B₁₆ to 039D₁₆	00XX0000₂
	035B₁₆ to 035D₁₆	00XX0000₂

Bit symbol	Bit name	Function	R	W
TMOD0	Operation mode select bit	b1 b0 0 0 : Timer mode 0 1 : Event counter mode 1 0 : Pulse period/pulse width measurement mode (Note 3) 1 1 : Inhibited	○	○
TMOD1			○	○
MR0	Function varies with each operation mode		○	○
MR1			○	○
MR2			○ (Note 1) × (Note 2)	○ ×
MR3			○	×
TCK0	Count source select bit (Function varies with each operation mode)		○	○
TCK1			○	○

Note 1: Timer B0, timer B3.
Note 2: Timer B1, timer B2, timer B4, timer B5.
Note 3: In the timer B1 mode register of M30623(80-pin package), do not use this mode, because timer B1 has no input pin.

Figure 1.17.15. Timer B-related registers (1)

Timer Bi register (Note)

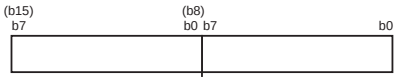

Symbol	Address	When reset
TB0	0391_{16}, 0390_{16}	Indeterminate
TB1	0393_{16}, 0392_{16}	Indeterminate
TB2	0395_{16}, 0394_{16}	Indeterminate
TB3	0351_{16}, 0350_{16}	Indeterminate
TB4	0353_{16}, 0352_{16}	Indeterminate
TB5	0355_{16}, 0354_{16}	Indeterminate

Function	Values that can be set	R	W
• Timer mode Counts the timer's period	0000_{16} to $FFFF_{16}$	○	○
• Event counter mode Counts external pulses input or a timer overflow (Note 2)	0000_{16} to $FFFF_{16}$	○	○
• Pulse period / pulse width measurement mode Measures a pulse period or width (Note 3)	——	○	×

Note 1: Read and write data in 16-bit units.
Note 2: In the timer B1 of M30623(80-pin package), do not select the external pulses input as count source, because timer B1 has no input pin.
Note 3: In the timer B1 of M30623(80-pin package), this mode does not function, because timer B1 has no input pin.

Count start flag

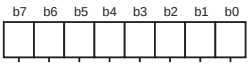

Symbol	Address	When reset
TABSR	0380_{16}	00_{16}

Bit symbol	Bit name	Function	R	W
TA0S	Timer A0 count start flag	0 : Stops counting 1 : Starts counting	○	○
TA1S	Timer A1 count start flag		○	○
TA2S	Timer A2 count start flag		○	○
TA3S	Timer A3 count start flag		○	○
TA4S	Timer A4 count start flag		○	○
TB0S	Timer B0 count start flag		○	○
TB1S	Timer B1 count start flag		○	○
TB2S	Timer B2 count start flag		○	○

Timer B3, 4, 5 count start flag

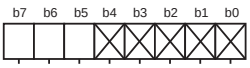

Symbol	Address	When reset
TBSR	0340_{16}	00_{16}

Bit symbol	Bit name	Function	R	W
Nothing is assigned. In an attempt to write to these bits, write “0”. The value, if read, turns out to be “0”.			–	–
TB3S	Timer B3 count start flag	0 : Stops counting 1 : Starts counting	○	○
TB4S	Timer B4 count start flag		○	○
TB5S	Timer B5 count start flag		○	○

Clock prescaler reset flag

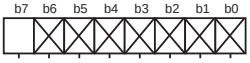

Symbol	Address	When reset
CPSRF	0381_{16}	$0XXXXXXX_2$

Bit symbol	Bit name	Function	R	W
Nothing is assigned. In an attempt to write to these bits, write “0”. The value, if read, turns out to be “0”.			–	–
CPSR	Clock prescaler reset flag	0 : No effect 1 : Prescaler is reset (When read, the value is “0”)	○	○

Figure 1.17.16. Timer B-related registers (2)

(1) Timer mode

In this mode, the timer counts an internally generated count source. (See Table 1.17.6.) Figure 1.17.17 shows the timer Bi mode register in timer mode.

Table 1.17.6. Timer specifications in timer mode

Item	Specification
Count source	f_1, f_8, f_{32}, f_{C32}
Count operation	• Counts down • When the timer underflows, it reloads the reload register contents before continuing counting
Divide ratio	1/(n+1) n : Set value
Count start condition	Count start flag is set (= 1)
Count stop condition	Count start flag is reset (= 0)
Interrupt request generation timing	The timer underflows
TBi_{IN} pin function	Programmable I/O port
Read from timer	Count value is read out by reading timer Bi register
Write to timer	• When counting stopped When a value is written to timer Bi register, it is written to both reload register and counter • When counting in progress When a value is written to timer Bi register, it is written to only reload register (Transferred to counter at next reload time)

Note 1: M30623(80-pin package) does not have the input pin($TB1_{IN}$) of timer B1.

Timer Bi mode register

b7	b6	b5	b4	b3	b2	b1	b0
						0	0

Symbol	Address	When reset
TBiMR(i=0 to 5)	$039B_{16}$ to $039D_{16}$ $035B_{16}$ to $035D_{16}$	$00XX0000_2$ $00XX0000_2$

Bit symbol	Bit name	Function	R	W
TMOD0	Operation mode select bit	b1 b0 0 0 : Timer mode	○	○
TMOD1			○	○
MR0	Invalid in timer mode Can be “0” or “1”		○	○
MR1			○	○
MR2	0 (Fixed to “0” in timer mode ; i = 0, 3)		○ (Note 1)	○
	Nothing is assiigned (i = 1, 2, 4, 5). In an attempt to write to this bit, write “0”. The value, if read, turns out to be indeterminate.		× (Note 2)	×
MR3	Invalid in timer mode. In an attempt to write to this bit, write “0”. The value, if read in timer mode, turns out to be indeterminate.		○	×
TCK0	Count source select bit	b7 b6 0 0 : f_1 0 1 : f_8 1 0 : f_{32} 1 1 : f_{C32}	○	○
TCK1			○	○

Note 1: Timer B0, timer B3.
Note 2: Timer B1, timer B2, timer B4, timer B5.

Figure 1.17.17. Timer Bi mode register in timer mode

(2) Event counter mode

In this mode, the timer counts an external signal or an internal timer's overflow. (See Table 1.17.7.) Figure 1.17.18 shows the timer Bi mode register in event counter mode.

Table 1.17.7. Timer specifications in event counter mode

Item	Specification
Count source	• External signals input to TBiIN pin • Effective edge of count source can be a rising edge, a falling edge, or falling and rising edges as selected by software
Count operation	• Counts down • When the timer underflows, it reloads the reload register contents before continuing counting
Divide ratio	1/(n+1) n : Set value
Count start condition	Count start flag is set (= 1)
Count stop condition	Count start flag is reset (= 0)
Interrupt request generation timing	The timer underflows
TBiIN pin function	Count source input
Read from timer	Count value can be read out by reading timer Bi register
Write to timer	• When counting stopped When a value is written to timer Bi register, it is written to both reload register and counter • When counting in progress When a value is written to timer Bi register, it is written to only reload register (Transferred to counter at next reload time)

Note 1: M30623(80-pin package) does not have the input pin(TB1IN) of timer B1.

Timer Bi mode register

b7	b6	b5	b4	b3	b2	b1	b0
						0	1

Symbol	Address	When reset
TBiMR(i=0 to 5)	039B16 to 039D16 035B16 to 035D16	00XX0000₂ 00XX0000₂

Bit symbol	Bit name	Function	R	W
TMOD0	Operation mode select bit	b1 b0 0 1 : Event counter mode	○	○
TMOD1			○	○
MR0	Count polarity select bit (Note 1)	b3 b2 0 0 : Counts external signal's falling edges 0 1 : Counts external signal's rising edges 1 0 : Counts external signal's falling and rising edges 1 1 : Inhibited	○	○
MR1			○	○
MR2	0 (Fixed to "0" in event counter mode; i = 0, 3)		○ (Note 2)	○
	Nothing is assigned (i = 1, 2, 4, 5). In an attempt to write to this bit, write "0". The value, if read, turns out to be indeterminate.		× (Note 3)	×
MR3	Invalid in event counter mode. In an attempt to write to this bit, write "0". The value, if read in event counter mode, turns out to be indeterminate.		○	×
TCK0	Invalid in event counter mode. Can be "0" or "1".		○	○
TCK1	Event clock select	0 : Input from TBiIN pin (Note 4) 1 : TBj overflow (j = i – 1; however, j = 2 when i = 0, j = 5 when i = 3)	○	○

Note 1: Valid only when input from the TBiIN pin is selected as the event clock.
If timer's overflow is selected, this bit can be "0" or "1".
In timer B1 mode register of M30623(80-pin package), this bit is invalid.
Note 2: Timer B0, timer B3.
Note 3: Timer B1, timer B2, timer B4, timer B5.
Note 4: Set the corresponding port direction register to "0".
In M30623(80-pin package), do not use the input from TB1IN pin as event clock, because there is no TB1IN pin.

Figure 1.17.18. Timer Bi mode register in event counter mode

(3) Pulse period/pulse width measurement mode

In this mode, the timer measures the pulse period or pulse width of an external signal. (See Table 1.17.8.)

M30623(80-pin package), timer B1 has no input pin, so can not use this function.

Figure 1.17.19 shows the timer Bi mode register in pulse period/pulse width measurement mode. Figure 1.17.20 shows the operation timing when measuring a pulse period. Figure 1.17.21 shows the operation timing when measuring a pulse width

Table 1.17.8. Timer specifications in pulse period/pulse width measurement mode

Item	Specification
Count source	f_1, f_8, f_{32}, f_{C32}
Count operation	• Up count • Counter value "0000_{16}" is transferred to reload register at measurement pulse's effective edge and the timer continues counting
Count start condition	Count start flag is set (= 1)
Count stop condition	Count start flag is reset (= 0)
Interrupt request generation timing	• When measurement pulse's effective edge is input (Note 1) • When an overflow occurs. (Simultaneously, the timer Bi overflow flag changes to "1". The timer Bi overflow flag changes to "0" when the count start flag is "1" and a value is written to the timer Bi mode register.)
TBi_{IN} pin function	Measurement pulse input
Read from timer	When timer Bi register is read, it indicates the reload register's content (measurement result) (Note 2)
Write to timer	Cannot be written to

Note 1: An interrupt request is not generated when the first effective edge is input after the timer has started counting.

Note 2: The value read out from the timer Bi register is indeterminate until the second effective edge is input after the timer.

Timer Bi mode register

b7	b6	b5	b4	b3	b2	b1	b0
						1	0

Symbol	Address	When reset
TBiMR(i=0 to 5)	$039B_{16}$ to $039D_{16}$	$00XX0000_2$
	$035B_{16}$ to $035D_{16}$	$00XX0000_2$

Bit symbol	Bit name	Function	R	W
TMOD0	Operation mode select bit	b1 b0 1 0 : Pulse period / pulse width measurement mode	○	○
TMOD1			○	○
MR0	Measurement mode select bit	b3 b2 0 0 : Pulse period measurement (Interval between measurement pulse's falling edge to falling edge) 0 1 : Pulse period measurement (Interval between measurement pulse's rising edge to rising edge) 1 0 : Pulse width measurement (Interval between measurement pulse's falling edge to rising edge, and between rising edge to falling edge) 1 1 : Inhibited	○	○
MR1			○	○
MR2	0 (Fixed to "0" in pulse period/pulse width measurement mode; i = 0, 3)		○ (Note 2)	○
	Nothing is assigned (i = 1, 2, 4, 5). In an attempt to write to this bit, write "0". The value, if read, turns out to be indeterminate.		× (Note 3)	×
MR3	Timer Bi overflow flag (Note 1)	0 : Timer did not overflow 1 : Timer has overflowed	○	×
TCK0	Count source select bit	b7 b6 0 0 : f_1 0 1 : f_8 1 0 : f_{32} 1 1 : f_{C32}	○	○
TCK1			○	○

Note 1: The timer Bi overflow flag changes to "0" when the count start flag is "1" and a value is written to the timer Bi mode register. This flag cannot be set to "1" by software.
Note 2: Timer B0, timer B3.
Note 3: Timer B1, timer B2, timer B4, timer B5.

Figure 1.17.19. Timer Bi mode register in pulse period/pulse width measurement mode

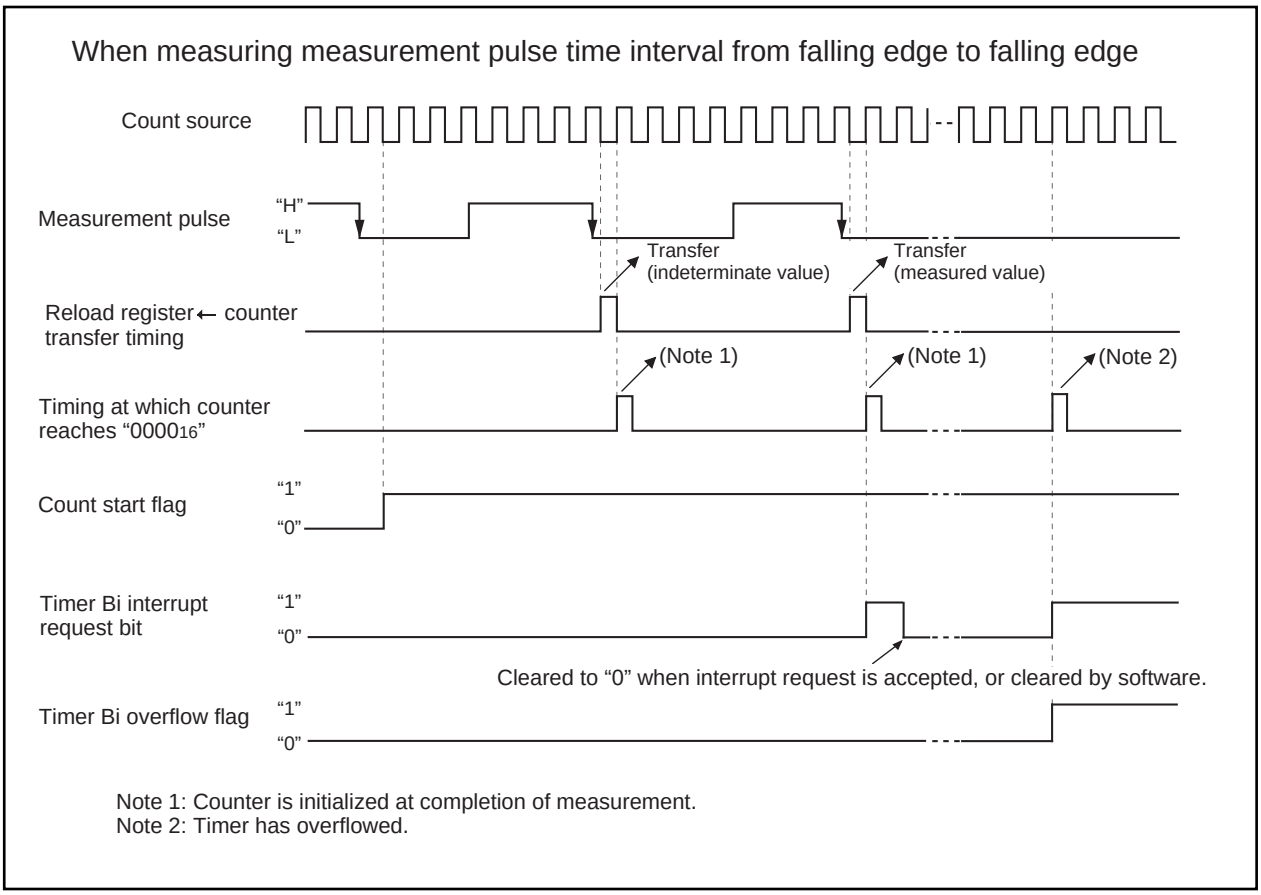

Figure 1.17.20. Operation timing when measuring a pulse period

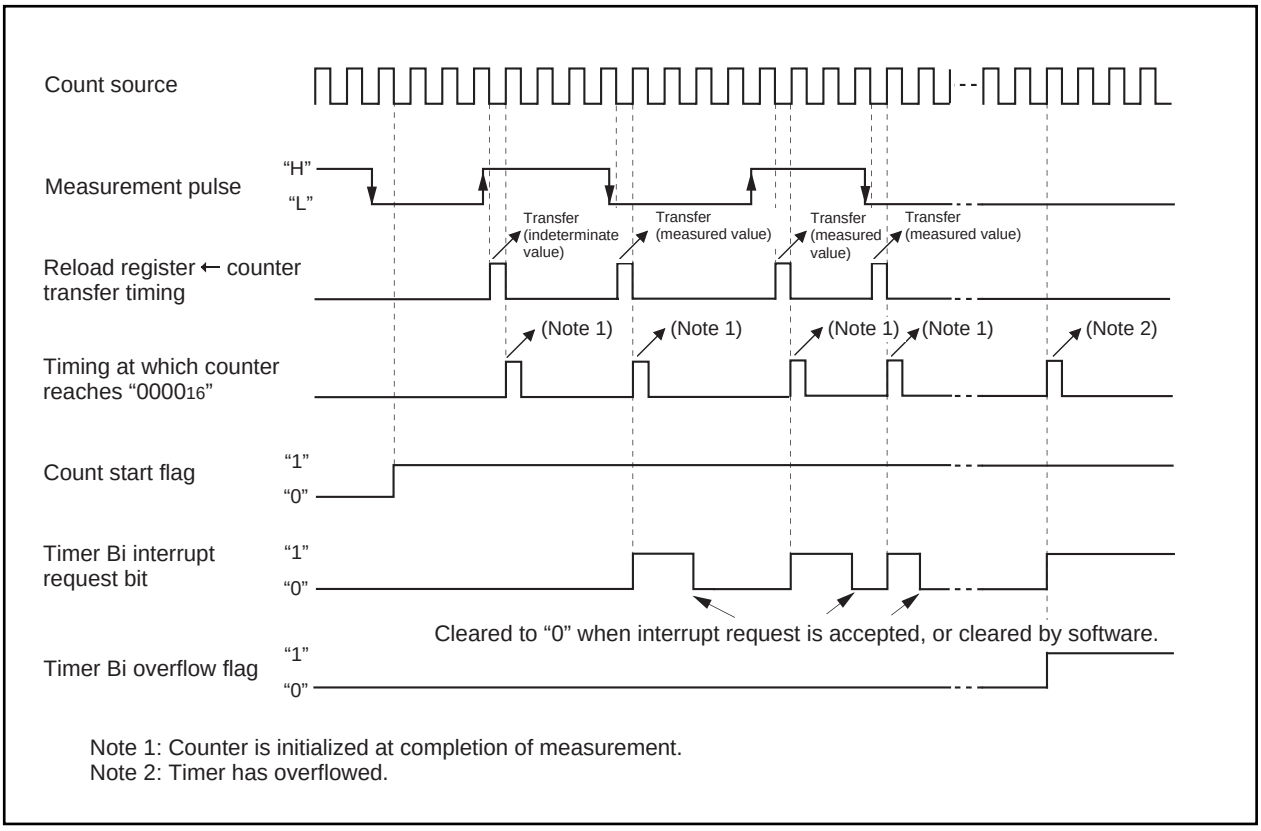

Figure 1.17.21. Operation timing when measuring a pulse width

Timers' functions for three-phase motor control

Use of more than one built-in timer A and timer B provides the means of outputting three-phase motor driving waveforms.

In M30623(80-pin package), the pins V, $\overline{V}$, W, and $\overline{W}$ for three-phase motor control have no corresponding external pin. So, do not use this function.

Figures 1.18.1 to 1.18.3 show registers related to timers for three-phase motor control.

Three-phase PWM control register 0

b7	b6	b5	b4	b3	b2	b1	b0

Symbol	Address	When reset
INVC0	0348_{16}	00_{16}

Bit symbol	Bit name	Description	R	W
INV00	Effective interrupt output polarity select bit (Note4)	0: A timer B2 interrupt occurs when the timer A1 reload control signal is "1". 1: A timer B2 interrupt occurs when the timer A1 reload control signal is "0". **Effective only in three-phase mode 1**	○	○
INV01	Effective interrupt output specification bit (Note4)	0: Not specified. 1: Selected by the effective interrupt output polarity selection bit. **Effective only in three-phase mode 1**	○	○
INV02	Mode select bit (Note 2)	0: Normal mode 1: Three-phase PWM output mode	○	○
INV03	Output control bit	0: Output disabled 1: Output enabled	○	○
INV04	Positive and negative phases concurrent L output disable function enable bit	0: Feature disabled 1: Feature enabled	○	○
INV05	Positive and negative phases concurrent L output detect flag	0: Not detected yet 1: Already detected	○	○ (Note 1)
INV06	Modulation mode select bit (Note 3)	0: Triangular wave modulation mode 1: Sawtooth wave modulation mode	○	○
INV07	Software trigger bit	1: Trigger generated The value, when read, is "0".	○	○

Note 1: No value other than "0" can be written.
Note 2: Selecting three-phase PWM output mode causes $P8_0$, $P8_1$, and $P7_2$ through $P7_5$ to output U, $\overline{U}$, V, $\overline{V}$, W, and $\overline{W}$, and works the timer for setting short circuit prevention time, the U, V, W phase output control circuits, and the circuit for setting timer B2 interrupt frequency.
Note 3: **In triangular wave modulation mode:**
The short circuit prevention timer starts in synchronization with the falling edge of timer Ai output.
The data transfer from the three-phase buffer register to the three-phase output shift register is made only once in synchronization with the transfer trigger signal after writing to the three-phase output buffer register.
In sawtooth wave modulation mode:
The short circuit prevention timer starts in synchronization with the falling edge of timer A output and with the transfer trigger signal.
The data transfer from the three-phase output buffer register to the three-phase output shift register is made with respect to every transfer trigger.
Note 4: To write "1" both to bit 0 (INV00) and bit 1 (INV01) of the three-phase PWM control register, set in advance the content of the timer B2 interrupt occurrences frequency set counter.

Three-phase PWM control register 1

b7	b6	b5	b4	b3	b2	b1	b0
X	X	X	0	X			

Symbol	Address	When reset
INVC1	0349_{16}	00_{16}

Bit symbol	Bit name	Description	R	W
INV10	Timer Ai start trigger signal select bit	0: Timer B2 overflow signal 1: Timer B2 overflow signal, signal for writing to timer B2	○	○
INV11	Timer A1-1, A2-1, A4-1 control bit	0: Three-phase mode 0 1: Three-phase mode 1	○	○
INV12	Short circuit timer count source select bit	0 : Not to be used 1 : $f_1/2$	○	○
Noting is assigned. In an attempt to write to this bit, write "0". The value, if read, turns out to be "0".			—	—
Reserved bit		Always set to "0"	○	○
Noting is assigned. In an attempt to write to these bits, write "0". The value, if read, turns out to be "0".			—	—

Note 1: To use three-phase PWM output mode, write "1" to INV12.

Figure1.18.1. Registers related to timers for three-phase motor control

Three-phase output buffer register 0

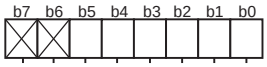

Symbol	Address	When reset
IDB0	034A16	0016

Bit Symbol	Bit name	Function	R	W
DU0	U phase output buffer 0	Setting in U phase output buffer 0	○	○
DUB0	$\overline{U}$ phase output buffer 0	Setting in $\overline{U}$ phase output buffer 0	○	○
DV0	V phase output buffer 0	Setting in V phase output buffer 0	○	○
DVB0	$\overline{V}$ phase output buffer 0	Setting in $\overline{V}$ phase output buffer 0	○	○
DW0	W phase output buffer 0	Setting in W phase output buffer 0	○	○
DWB0	$\overline{W}$ phase output buffer 0	Setting in $\overline{W}$ phase output buffer 0	○	○
Nothing is assigned. In an attempt to write to these bits, write "0". The value, if read, turns out to be "0".			—	—

Note: When executing read instruction of this register, the contents of three-phase shift register is read out.

Three-phase output buffer register 1

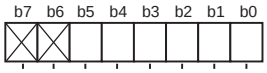

Symbol	Address	When reset
IDB1	034B16	0016

Bit Symbol	Bit name	Function	R	W
DU1	U phase output buffer 1	Setting in U phase output buffer 1	○	○
DUB1	$\overline{U}$ phase output buffer 1	Setting in $\overline{U}$ phase output buffer 1	○	○
DV1	V phase output buffer 1	Setting in V phase output buffer 1	○	○
DVB1	$\overline{V}$ phase output buffer 1	Setting in $\overline{V}$ phase output buffer 1	○	○
DW1	W phase output buffer 1	Setting in W phase output buffer 1	○	○
DWB1	$\overline{W}$ phase output buffer 1	Setting in $\overline{W}$ phase output buffer 1	○	○
Nothing is assigned. In an attempt to write to these bits, write "0". The value, if read, turns out to be "0".			—	—

Note: When executing read instruction of this register, the contents of three-phase shift register is read out.

Dead time timer

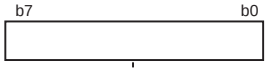

Symbol	Address	When reset
DOT	034C16	Indeterminate

Function	Values that can be set	R	W
Set dead time timer	1 to 255	—	○

Timer B2 interrupt occurrences frequency set counter

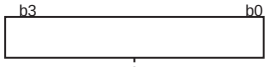

Symbol	Address	When reset
ICTB2	034D16	Indeterminate

Function	Values that can be set	R	W
Set occurrence frequency of timer B2 interrupt request	1 to 15	—	○

Note1: In setting 1 to bit 1 (INV01) - the effective interrupt output specification bit - of three-phase PWM control register 0, do not change the B2 interrupt occurrences frequency set counter to deal with the timer function for three-phase motor control.
Note2: Do not write at the timing of an overflow occurrence in timer B2.

Figure 1.18.2. Registers related to timers for three-phase motor control

Timer Ai register (Note)

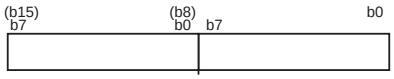

Symbol	Address	When reset
TA1	0389_{16},0388_{16}	Indeterminate
TA2	$038B_{16}$,$038A_{16}$	Indeterminate
TA4	$038F_{16}$,$038E_{16}$	Indeterminate
TB2	0395_{16},0394_{16}	Indeterminate

Function	Values that can be set	R	W
• Timer mode Counts an internal count source	0000_{16} to $FFFF_{16}$	○	○
• One-shot timer mode Counts a one shot width	0000_{16} to $FFFF_{16}$	×	○

Note: Read and write data in 16-bit units.

Timer Ai-1 register (Note)

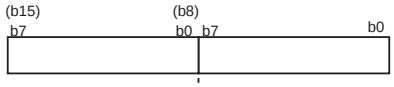

Symbol	Address	When reset
TA11	0343_{16},0342_{16}	Indeterminate
TA21	0345_{16},0344_{16}	Indeterminate
TA41	0347_{16},0346_{16}	Indeterminate

Function	Values that can be set	R	W
Counts an internal count source	0000_{16} to $FFFF_{16}$	○	○

Note: Read and write data in 16-bit units.

Trigger select register

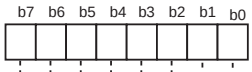

Symbol	Address	When reset
TRGSR	0383_{16}	00_{16}

Bit symbol	Bit name	Function	R	W
TA1TGL	Timer A1 event/trigger select bit	b1 b0 0 0 : Input on $TA1_{IN}$ is selected (Note) 0 1 : TB2 overflow is selected 1 0 : TA0 overflow is selected 1 1 : TA2 overflow is selected	○	○
TA1TGH			○	○
TA2TGL	Timer A2 event/trigger select bit	b3 b2 0 0 : Input on $TA2_{IN}$ is selected (Note) 0 1 : TB2 overflow is selected 1 0 : TA1 overflow is selected 1 1 : TA3 overflow is selected	○	○
TA2TGH			○	○
TA3TGL	Timer A3 event/trigger select bit	b5 b4 0 0 : Input on $TA3_{IN}$ is selected (Note) 0 1 : TB2 overflow is selected 1 0 : TA2 overflow is selected 1 1 : TA4 overflow is selected	○	○
TA3TGH			○	○
TA4TGL	Timer A4 event/trigger select bit	b7 b6 0 0 : Input on $TA4_{IN}$ is selected (Note) 0 1 : TB2 overflow is selected 1 0 : TA3 overflow is selected 1 1 : TA0 overflow is selected	○	○
TA4TGH			○	○

Note: Set the corresponding port direction register to "0".

Count start flag

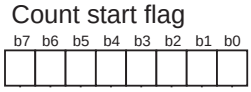

Symbol	Address	When reset
TABSR	0380_{16}	00_{16}

Bit symbol	Bit name	Function	R	W
TA0S	Timer A0 count start flag	0 : Stops counting 1 : Starts counting	○	○
TA1S	Timer A1 count start flag		○	○
TA2S	Timer A2 count start flag		○	○
TA3S	Timer A3 count start flag		○	○
TA4S	Timer A4 count start flag		○	○
TB0S	Timer B0 count start flag		○	○
TB1S	Timer B1 count start flag		○	○
TB2S	Timer B2 count start flag		○	○

Figure 1.18.3. Registers related to timers for three-phase motor control

Three-phase motor driving waveform output mode (three-phase waveform mode)

Setting "1" in the mode select bit (bit 2 at 0348_{16}) shown in Figure 1.18.1 - causes three-phase waveform mode that uses four timers A1, A2, A4, and B2 to be selected. As shown in Figure 1.18.4, set timers A1, A2, and A4 in one-shot timer mode, set the trigger in timer B2, and set timer B2 in timer mode using the respective timer mode registers.

Timer Ai mode register

b7	b6	b5	b4	b3	b2	b1	b0
		0	1			1	0

Symbol	Address	When reset
TA1MR	0397_{16}	00_{16}
TA2MR	0398_{16}	00_{16}
TA3MR	$039A_{16}$	00_{16}

Bit symbol	Bit name	Function	R	W
TMOD0	Operation mode select bit	b1 b0 1 0 : One-shot timer mode	○	○
TMOD1			○	○
MR0	Pulse output function select bit	0 (Must always be "0" in three-phase PWM output mode)	○	○
MR1	External trigger select bit	Invalid in three-phase PWM output mode Can be "0" or "1"	○	○
MR2	Trigger select bit	1 : Selected by event/trigger select register	○	○
MR3	0 (Must always be "0" in one-shot timer mode)		○	○
TCK0	Count source select bit	b7 b6 0 0 : f_1 0 1 : f_8 1 0 : f_{32} 1 1 : fc_{32}	○	○
TCK1			○	○

Timer B2 mode register

b7	b6	b5	b4	b3	b2	b1	b0
			0			0	0

Symbol	Address	When reset
TB2MR	$039D_{16}$	$00XX0000_2$

Bit symbol	Bit name	Function	R	W
TMOD0	Operation mode select bit	b1 b0 0 0 : Timer mode	○	○
TMOD1			○	○
MR0	Invalid in timer mode Can be "0" or "1"		○	○
MR1			○	○
MR2	0 (Fixed to "0" in timer mode ; i = 0)		○	○
MR3	Invalid in timer mode. This bit can neither be set nor reset. When read in timer mode, its content is indeterminate.		○	×
TCK0	Count source select bit	b7 b6 0 0 : f_1 0 1 : f_8 1 0 : f_{32} 1 1 : fc_{32}	○	○
TCK1			○	○

Figure 1.18.4. Timer mode registers in three-phase waveform mode

Figure 1.18.5 shows the block diagram for three-phase waveform mode. In three-phase waveform mode, the positive-phase waveforms (U phase, V phase, and W phase) and negative waveforms ($\overline{U}$ phase, $\overline{V}$ phase, and $\overline{W}$ phase), six waveforms in total, are output from $P8_0$,$P8_1$, $P7_2$, $P7_3$, $P7_4$, and $P7_5$ as active on the "L" level. Of the timers used in this mode, timer A4 controls the U phase and $\overline{U}$ phase, timer A1 controls the V phase and $\overline{V}$ phase, and timer A2 controls the W phase and $\overline{W}$ phase respectively; timer B2 controls the periods of one-shot pulse output from timers A4, A1, and A2.

In outputting a waveform, dead time can be set so as to cause the "L" level of the positive waveform output (U phase, V phase, and W phase) not to lap over the "L" level of the negative waveform output ($\overline{U}$ phase, $\overline{V}$ phase, and $\overline{W}$ phase).

To set short circuit time, use three 8-bit timers sharing the reload register for setting dead time. A value from 1 through 255 can be set as the count of the timer for setting dead time. The timer for setting dead time works as a one-shot timer. If a value is written to the dead timer ($034C_{16}$), the value is written to the reload register shared by the three timers for setting dead time.

Any of the timers for setting dead time takes the value of the reload register into its counter, if a start trigger comes from its corresponding timer, and performs a down count in line with the clock source selected by the dead time timer count source select bit (bit 2 at 0349_{16}). The timer can receive another trigger again before the workings due to the previous trigger are completed. In this instance, the timer performs a down count from the reload register's content after its transfer, provoked by the trigger, to the timer for setting dead time.

Since the timer for setting dead time works as a one-shot timer, it starts outputting pulses if a trigger comes; it stops outputting pulses as soon as its content becomes 00_{16}, and waits for the next trigger to come.

The positive waveforms (U phase, V phase, and W phase) and the negative waveforms ($\overline{U}$ phase, $\overline{V}$ phase, and $\overline{W}$ phase) in three-phase waveform mode are output from respective ports by means of setting "1" in the output control bit (bit 3 at 0348_{16}). Setting "0" in this bit causes the ports to be the state of set by port direction register. This bit can be set to "0" not only by use of the applicable instruction, but by entering a falling edge in the $\overline{NMI}$ terminal or by resetting. Also, if "1" is set in the positive and negative phases concurrent L output disable function enable bit (bit 4 at 0348_{16}) causes one of the pairs of U phase and $\overline{U}$ phase, V phase and $\overline{V}$ phase, and W phase and $\overline{W}$ phase concurrently go to "L", as a result, the port become the state of set by port direction register.

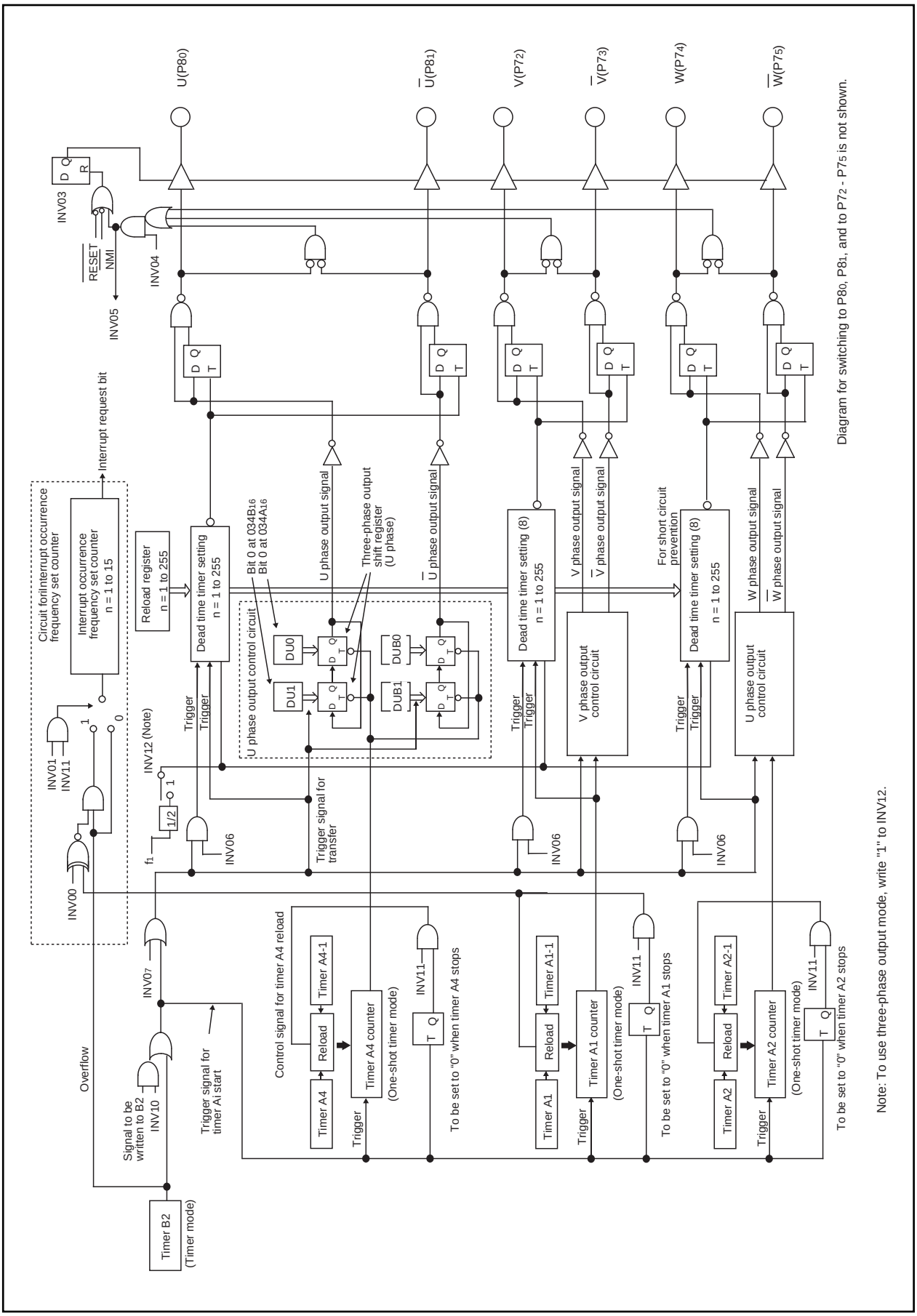

Figure 1.18.5. Block diagram for three-phase waveform mode

Triangular wave modulation

To generate a PWM waveform of triangular wave modulation, set "0" in the modulation mode select bit (bit 6 at 0348_{16}). Also, set "1" in the timers A4-1, A1-1, A2-1 control bit (bit 1 at 0349_{16}). In this mode, each of timers A4, A1, and A2 has two timer registers, and alternately reloads the timer register's content to the counter every time timer B2 counter's content becomes 0000_{16}. If "1" is set to the effective interrupt output specification bit (bit 1 at 0348_{16}), the frequency of interrupt requests that occur every time the timer B2 counter's value becomes 0000_{16} can be set by use of the timer B2 counter ($034D_{16}$) for setting the frequency of interrupt occurrences. The frequency of occurrences is given by (setting; setting $\neq$ 0).
Setting "1" in the effective interrupt output specification bit (bit 1 at 0348_{16}) provides the means to choose which value of the timer A1 reload control signal to use, "0" or "1", to cause timer B2's interrupt request to occur. To make this selection, use the effective interrupt output polarity selection bit (bit 0 at 0348_{16}).
An example of U phase waveform is shown in Figure 1.18.6, and the description of waveform output workings is given below. Set "1" in DU0 (bit 0 at $034A_{16}$). And set "0" in DUB0 (bit 1 at $034A_{16}$). In addition, set "0" in DU1 (bit 0 at $034B_{16}$) and set "1" in DUB1 (bit 1 at $034B_{16}$). Also, set "0" in the effective interrupt output specification bit (bit 1 at 0348_{16}) to set a value in the timer B2 interrupt occurrence frequency set counter. By this setting, a timer B2 interrupt occurs when the timer B2 counter's content becomes 0000_{16} as many as (setting) times. Furthermore, set "1" in the effective interrupt output specification bit (bit 1 at 0348_{16}), set in the effective interrupt polarity select bit (bit 0 at 0348_{16}) and set "1" in the interrupt occurrence frequency set counter($034D_{16}$). These settings cause a timer B2 interrupt to occur every other interval when the U phase output goes to "H".
When the timer B2 counter's content becomes 0000_{16}, timer A4 starts outputting one-shot pulses. In this instance, the content of DU1 (bit 0 at $034B_{16}$) and that of DU0 (bit 0 at $034A_{16}$) are set in the three-phase output shift register (U phase), the content of DUB1 (bit 1 at $034B_{16}$) and that of DUB0 (bit 1 at $034A_{16}$) are set in the three-phase shift register ($\overline{U}$ phase). After triangular wave modulation mode is selected, however, no setting is made in the shift register even though the timer B2 counter's content becomes 0000_{16}.
The value of DU0 and that of DUB0 are output to the U terminal ($P8_0$) and to the $\overline{U}$ terminal ($P8_1$) respectively. When the timer A4 counter counts the value written to timer A4 ($038F_{16}$, $038E_{16}$) and when timer A4 finishes outputting one-shot pulses, the three-phase shift register's content is shifted one position, and the value of DU1 and that of DUB1 are output to the U phase output signal and to $\overline{U}$ phase output signal respectively. At this time, one-shot pulses are output from the timer for setting dead time used for setting the time over which the "L" level of the U phase waveform does not lap over the "L" level of the $\overline{U}$ phase waveform, which has the opposite phase of the former. The U phase waveform output that started from the "H" level keeps its level until the timer for setting dead time finishes outputting one-shot pulses even though the three-phase output shift register's content changes from "1" to "0" by the effect of the one-shot pulses. When the timer for setting dead time finishes outputting one-shot pulses, "0" already shifted in the three-phase shift register goes effective, and the U phase waveform changes to the "L" level. When the timer B2 counter's content becomes 0000_{16}, the timer A4 counter starts counting the value written to timer A4-1 (0347_{16}, 0346_{16}), and starts outputting one-shot pulses. When timer A4 finishes outputting one-shot pulses, the three-phase shift register's content is shifted one position, but if the three-phase output shift register's content changes from "0" to "1" as a result of the shift, the output level changes from "L" to "H" without waiting for the timer for setting dead time to finish outputting one-shot pulses. A U phase waveform is generated by these workings repeatedly. With the exception that the three-phase output shift register on the U phase side is used, the workings in generating a U phase waveform, which has the opposite phase of the U phase waveform, are the same as in generating a U

phase waveform. In this way, a waveform can be picked up from the applicable terminal in a manner in which the "L" level of the U phase waveform doesn't lap over that of the U phase waveform, which has the opposite phase of the U phase waveform. The width of the "L" level too can be adjusted by varying the values of timer B2, timer A4, and timer A4-1. In dealing with the V and W phases, and $\overline{V}$ and $\overline{W}$ phases, the latter are of opposite phase of the former, have the corresponding timers work similarly to dealing with the U and $\overline{U}$ phases to generate an intended waveform.

A carrier wave of triangular waveform

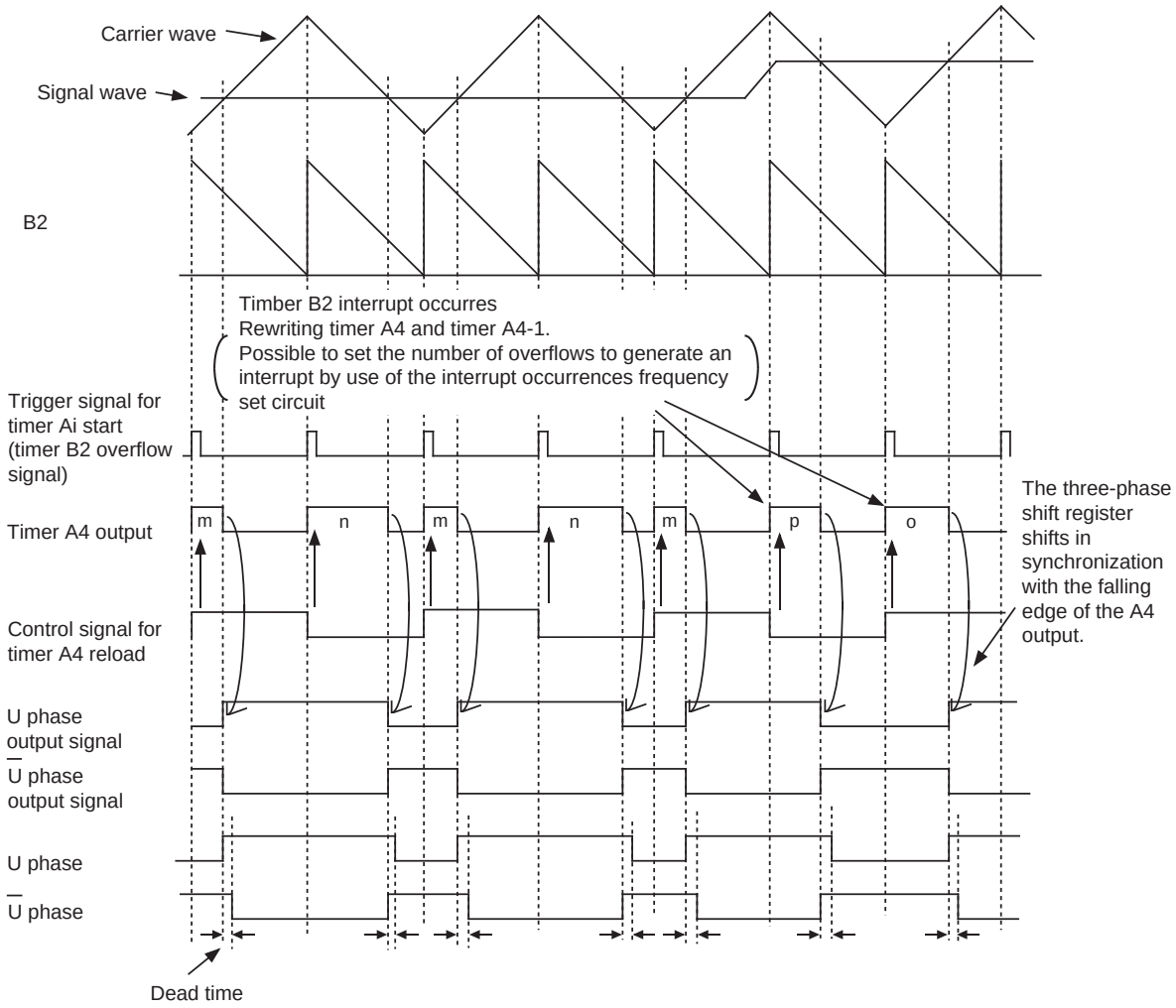

Note: Set to triangular wave modulation mode and to three-phase mode 1.

Figure 1.18.6. Timing chart of operation (1)

Assigning certain values to DU0 (bit 0 at 034A16) and DUB0 (bit 1 at 034A16), and to DU1 (bit 0 at 034B16) and DUB1 (bit 1 at 034B16) allows the user to output the waveforms as shown in Figure 1.18.7, that is, to output the U phase alone, to fix $\overline{U}$ phase to "H", to fix the U phase to "H," or to output the $\overline{U}$ phase alone.

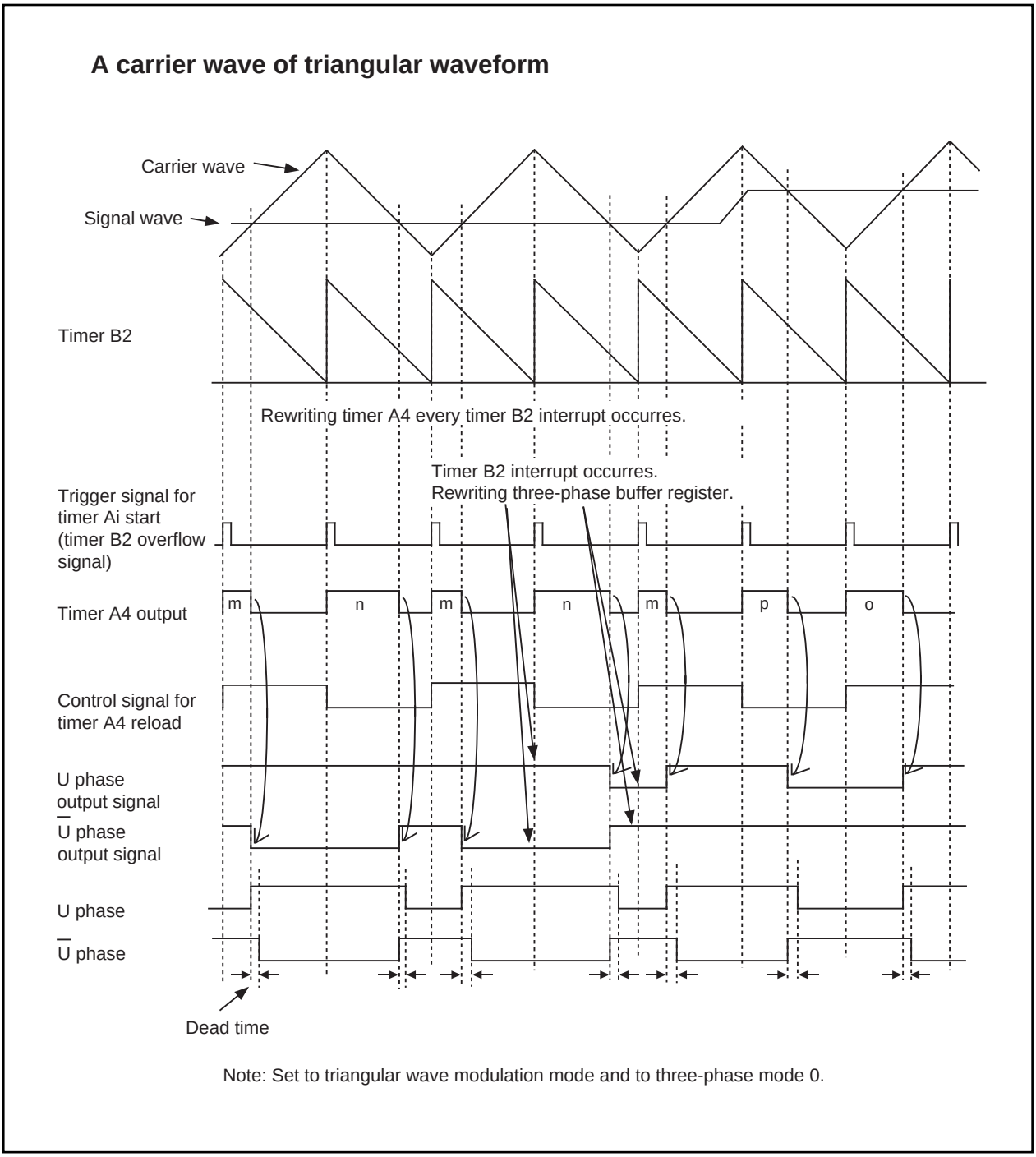

Figure 1.18.7. Timing chart of operation (2)

Sawtooth modulation

To generate a PWM waveform of sawtooth wave modulation, set "1" in the modulation mode select bit (bit 6 at 0348_{16}). Also, set "0" in the timers A4-1, A1-1, and A2-1 control bit (bit 1 at 0349_{16}). In this mode, the timer registers of timers A4, A1, and A2 comprise conventional timers A4, A1, and A2 alone, and reload the corresponding timer register's content to the counter every time the timer B2 counter's content becomes 0000_{16}. The effective interrupt output specification bit (bit 1 at 0348_{16}) and the effective interrupt output polarity select bit (bit 0 at 0348_{16}) go nullified.

An example of U phase waveform is shown in Figure 75, and the description of waveform output workings is given below. Set "1" in DU0 (bit 0 at $034A_{16}$), and set "0" in DUB0 (bit 1 at $034A_{16}$). In addition, set "0" in DU1 (bit 0 at $034A_{16}$) and set "1" in DUB1 (bit 1 at $034A_{16}$).

When the timber B2 counter's content becomes 0000_{16}, timer B2 generates an interrupt, and timer A4 starts outputting one-shot pulses at the same time. In this instance, the contents of the three-phase buffer registers DU1 and DU0 are set in the three-phase output shift register (U phase), and the contents of DUB1 and DUB0 are set in the three-phase output register (U phase). After this, the three-phase buffer register's content is set in the three-phase shift register every time the timer B2 counter's content becomes 0000_{16}.

The value of DU0 and that of DUB0 are output to the U terminal ($P8_0$) and to the $\overline{U}$ terminal ($P8_1$) respectively. When the timer A4 counter counts the value written to timer A4 ($038F_{16}$, $038E_{16}$) and when timer A4 finishes outputting one-shot pulses, the three-phase output shift register's content is shifted one position, and the value of DU1 and that of DUB1 are output to the U phase output signal and to the $\overline{U}$ output signal respectively. At this time, one-shot pulses are output from the timer for setting dead time used for setting the time over which the "L" level of the U phase waveform doesn't lap over the "L" level of the $\overline{U}$ phase waveform, which has the opposite phase of the former. The U phase waveform output that started from the "H" level keeps its level until the timer for setting dead time finishes outputting one-shot pulses even though the three-phase output shift register's content changes from "1" to "0 "by the effect of the one-shot pulses. When the timer for setting dead time finishes outputting one-shot pulses, 0 already shifted in the three-phase shift register goes effective, and the U phase waveform changes to the "L" level. When the timer B2 counter's content becomes 0000_{16}, the contents of the three-phase buffer registers DU1 and DU0 are set in the three-phase shift register (U phase), and the contents of DUB1 and DUB0 are set in the three-phase shift register ($\overline{U}$ phase) again.

A U phase waveform is generated by these workings repeatedly. With the exception that the three-phase output shift register on the $\overline{U}$ phase side is used, the workings in generating a $\overline{U}$ phase waveform, which has the opposite phase of the U phase waveform, are the same as in generating a U phase waveform. In this way, a waveform can be picked up from the applicable terminal in a manner in which the "L" level of the U phase waveform doesn't lap over that of the U phase waveform, which has the opposite phase of the U phase waveform. The width of the "L" level too can be adjusted by varying the values of timer B2 and timer A4. In dealing with the V and W phases, and $\overline{V}$ and $\overline{W}$ phases, the latter are of opposite phase of the former, have the corresponding timers work similarly to dealing with the U and $\overline{U}$ phases to generate an intended waveform.

Setting "1" both in DUB0 and in DUB1 provides a means to output the U phase alone and to fix the $\overline{U}$ phase output to "H" as shown in Figure 1.18.8.

A carrier wave of sawtooth waveform

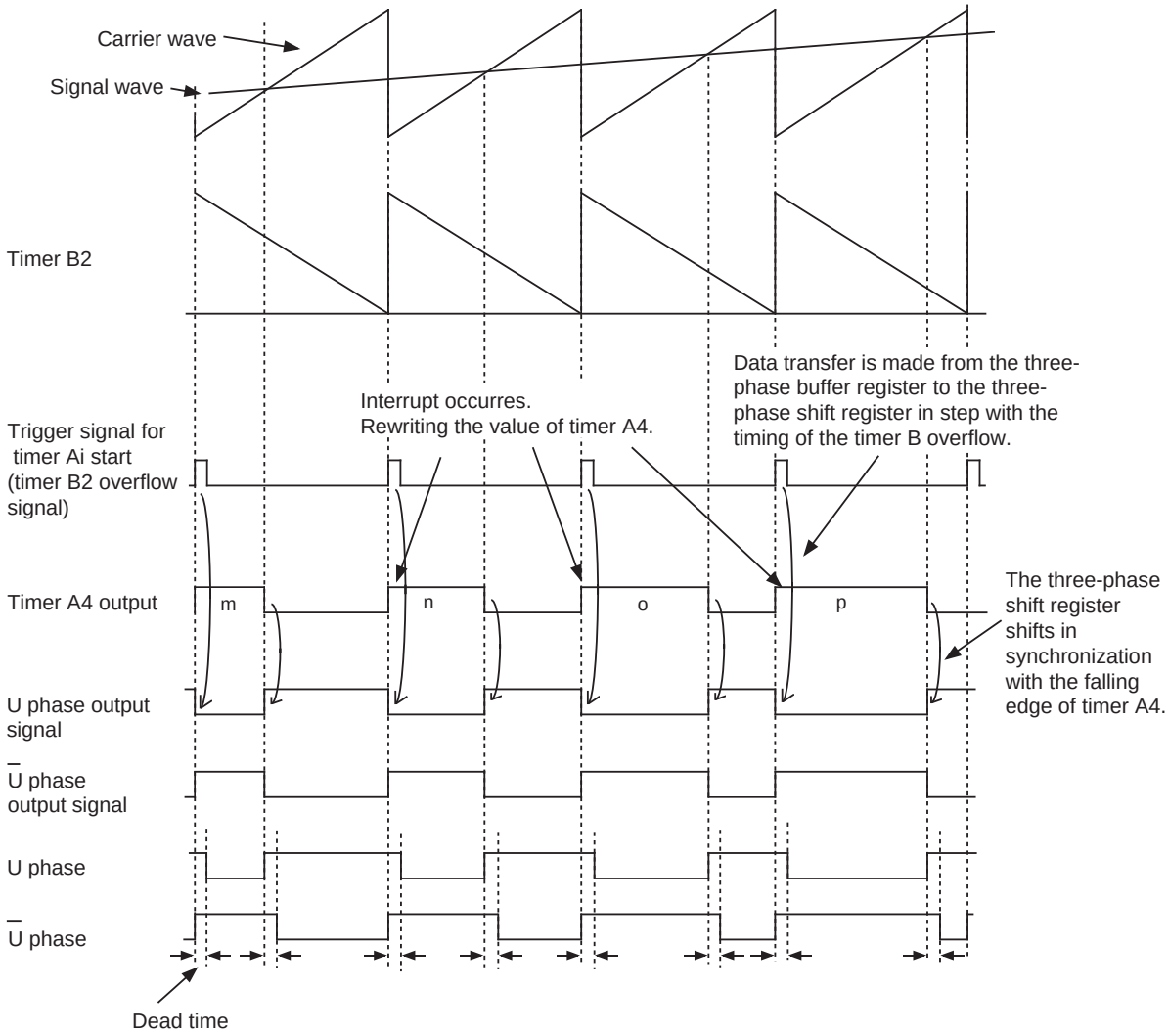

Note: Set to sawtooth modulation mode and to three-phase mode 0.

Figure 1.18.8. Timing chart of operation (3)

A carrier wave of sawtooth waveform

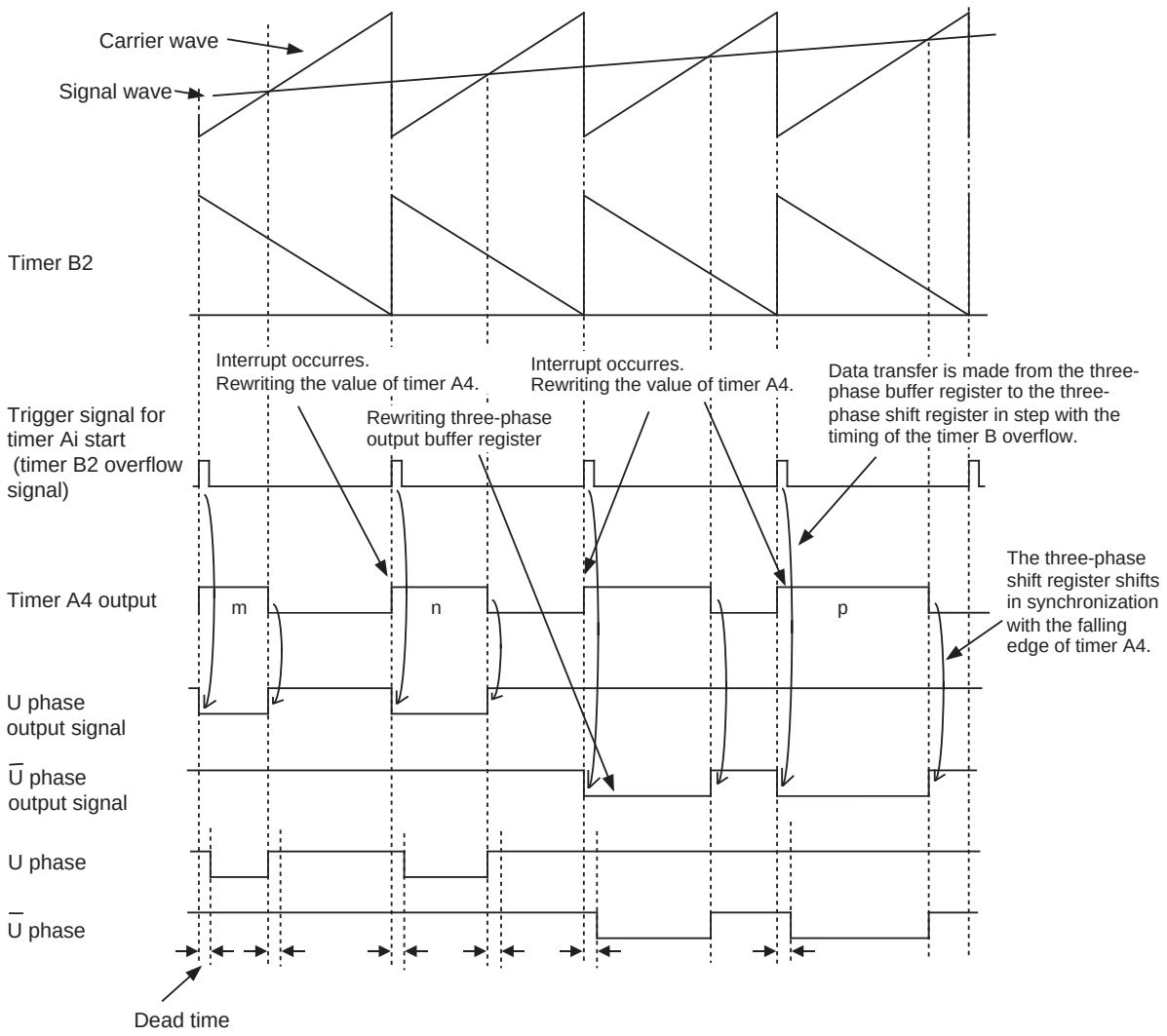

Note: Set to sawtooth modulation mode and to three-phase mode 0.

Figure 1.18.9. Timing chart of operation (4)

Serial I/O

Serial I/O is configured as five channels: UART0, UART1, UART2, S I/O3 and S I/O4.

UART0 to 2

UART0, UART1 and UART2 each have an exclusive timer to generate a transfer clock, so they operate independently of each other.

Figure 1.19.1 shows the block diagram of UART0, UART1 and UART2. Figures 1.19.2 and 1.19.3 show the block diagram of the transmit/receive unit.

UARTi (i = 0 to 2) has two operation modes: a clock synchronous serial I/O mode and a clock asynchronous serial I/O mode (UART mode). The contents of the serial I/O mode select bits (bits 0 to 2 at addresses $03A0_{16}$, $03A8_{16}$ and 0378_{16}) determine whether UARTi is used as a clock synchronous serial I/O or as a UART. Although a few functions are different, UART0, UART1 and UART2 have almost the same functions. UART0 through UART2 are almost equal in their functions with minor exceptions. UART2, in particular, is compliant with the SIM interface with some extra settings added in clock-asynchronous serial I/O mode (Note). It also has the bus collision detection function that generates an interrupt request if the TxD pin and the RxD pin are different in level.

In M30623(80-pin package), UART2 has the clock-asynchronous serial I/O mode and IIC mode.

Table 1.19.1 shows the comparison of functions of UART0 through UART2, and Figures 1.19.4 to 1.19.8 show the registers related to UARTi.

Note: SIM : Subscriber Identity Module

Table 1.19.1. Comparison of functions of UART0 through UART2

Function	UART0	UART1	UART2	
			M30622 (100pin-package)	M30623 (80pin-package)
CLK polarity selection	Possible (Note 1)	Possible (Note 1)	Possible (Note 1)	Impossible (Note 5)
LSB first / MSB first selection	Possible (Note 1)	Possible (Note 1)	Possible (Note 2)	
Continuous receive mode selection	Possible (Note 1)	Possible (Note 1)	Possible (Note 1)	
Transfer clock output from multiple pins selection	Impossible	Possible (Note 1)	Impossible	
Separate $\overline{CTS}$/$\overline{RTS}$ pins	Possible	Impossible	Impossible	
Serial data logic switch	Impossible	Impossible	Possible (Note 4)	
Sleep mode selection	Possible (Note 3)	Possible (Note 3)	Impossible	
TxD, RxD I/O polarity switch	Impossible	Impossible	Possible	
TxD, RxD port output format	CMOS output	CMOS output	N-channel open-drain output (Note 6)	
Parity error signal output	Impossible	Impossible	Possible (Note 4)	
Bus collision detection	Impossible	Impossible	Possible (Note 7)	

Note 1: Only when clock synchronous serial I/O mode.
Note 2: Only when clock synchronous serial I/O mode and 8-bit UART mode.
Note 3: Only when UART mode.
Note 4: Using for SIM interface.
Note 5: In M30623(80-pin package), do not use this function, because CLK_2 and $\overline{CTS_2}$/$\overline{RTS_2}$ have no external pin.
Note 6: Connect via pull-up resistor to V_{CC} outside.
Note 7: Generally, it use in case of IE bus-emulation.

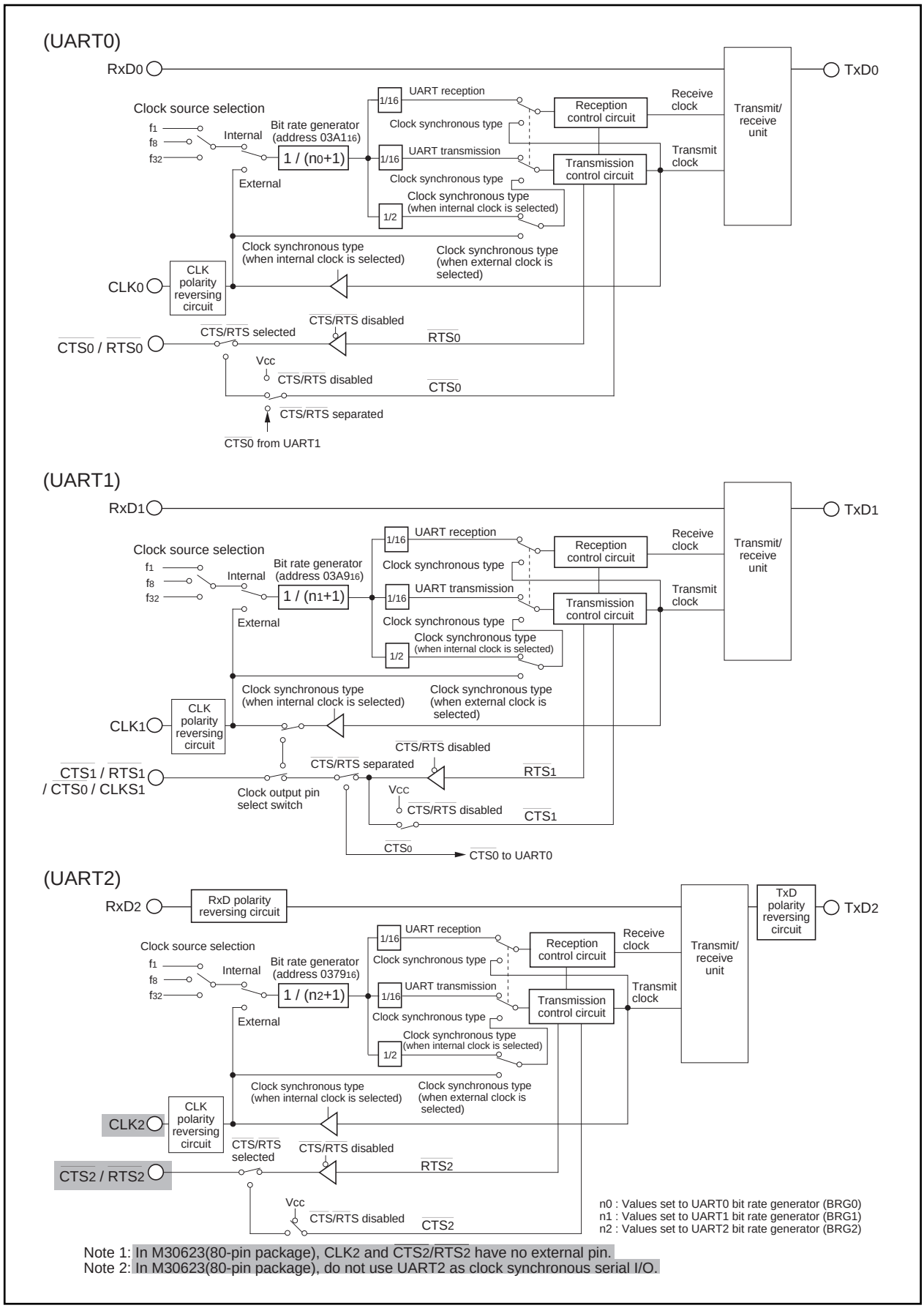

Figure 1.19.1. Block diagram of UARTi (i = 0 to 2)

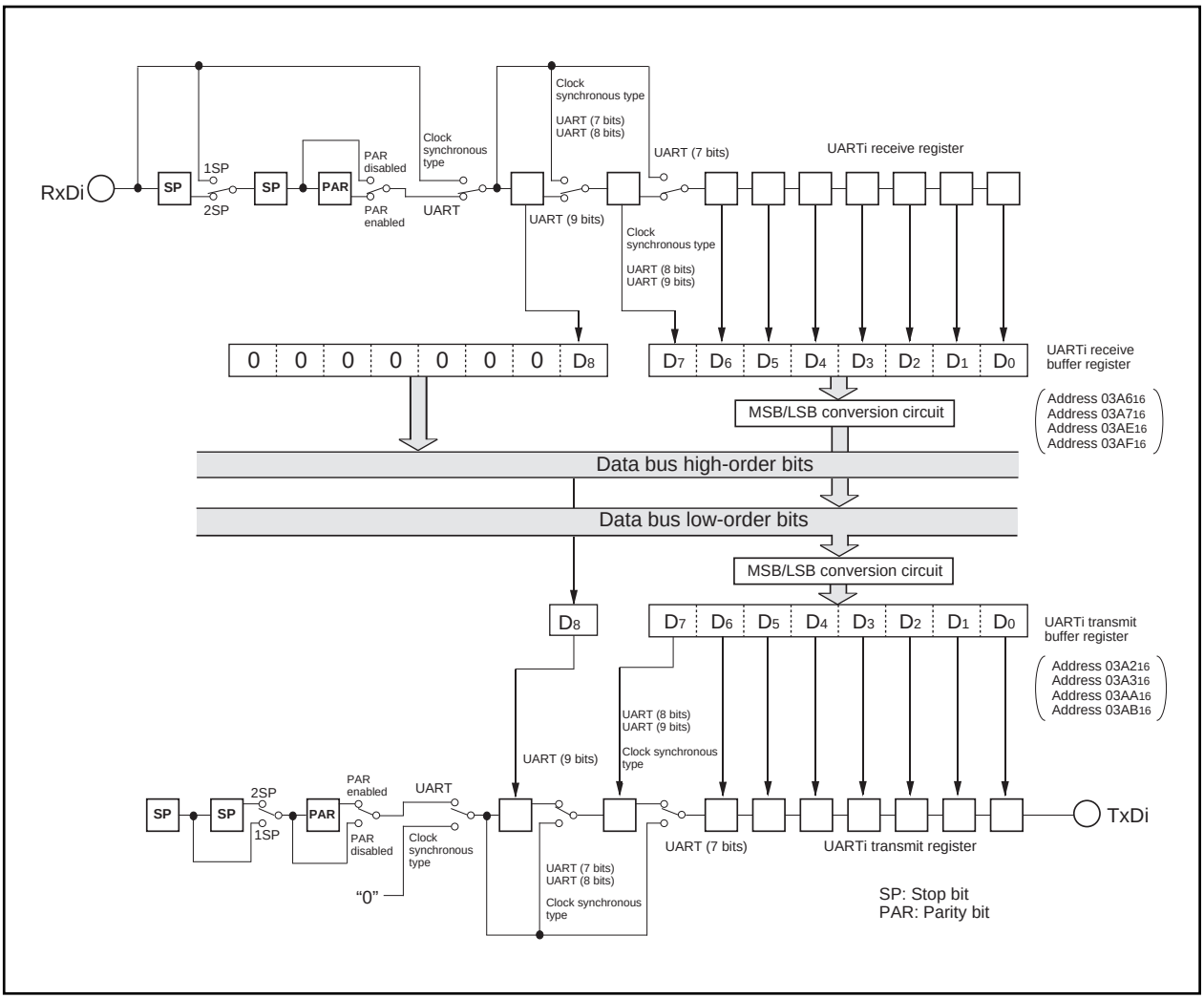

Figure 1.19.2. Block diagram of UARTi (i = 0, 1) transmit/receive unit

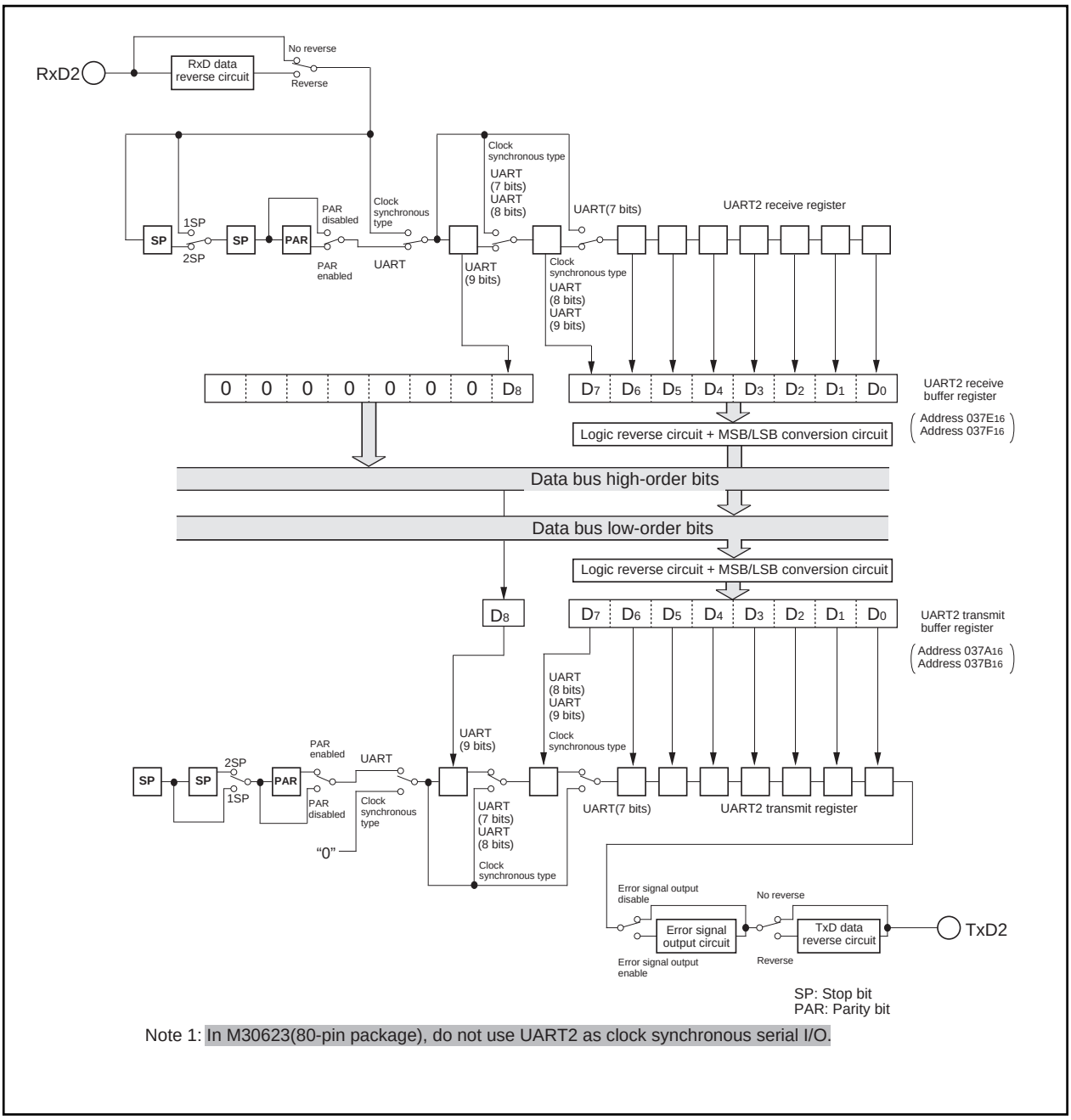

Note 1: In M30623(80-pin package), do not use UART2 as clock synchronous serial I/O.

Figure 1.19.3. Block diagram of UART2 transmit/receive unit

UARTi transmit buffer register

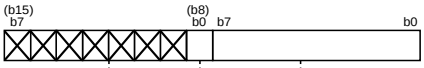

Symbol	Address	When reset
U0TB	$03A3_{16}$, $03A2_{16}$	Indeterminate
U1TB	$03AB_{16}$, $03AA_{16}$	Indeterminate
U2TB	$037B_{16}$, $037A_{16}$	Indeterminate

Function	R	W
Transmit data	×	○
Nothing is assigned. In an attempt to write to these bits, write "0". The value, if read, turn out to be indeterminate.	–	–

UARTi receive buffer register

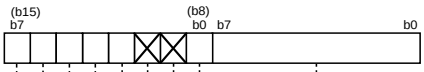

Symbol	Address	When reset
U0RB	$03A7_{16}$, $03A6_{16}$	Indeterminate
U1RB	$03AF_{16}$, $03AE_{16}$	Indeterminate
U2RB	$037F_{16}$, $037E_{16}$	Indeterminate

Bit symbol	Bit name	Function (During clock synchronous serial I/O mode)	Function (During UART mode)	R	W
—	———	Receive data	Receive data	○	×
Nothing is assigned. In an attempt to write to these bits, write "0". The value, if read, turns out to be "0".				–	–
ABT	Arbitration lost detecting flag (Note 2)	0 : Not detected 1 : Detected	Invalid	○	○
OER	Overrun error flag (Note 1)	0 : No overrun error 1 : Overrun error found	0 : No overrun error 1 : Overrun error found	○	×
FER	Framing error flag (Note 1)	Invalid	0 : No framing error 1 : Framing error found	○	×
PER	Parity error flag (Note 1)	Invalid	0 : No parity error 1 : Parity error found	○	×
SUM	Error sum flag (Note 1)	Invalid	0 : No error 1 : Error found	○	×

Note 1: Bits 15 through 12 are set to "0" when the serial I/O mode select bit (bits 2 to 0 at addresses $03A0_{16}$, $03A8_{16}$ and 0378_{16}) are set to "000_2" or the receive enable bit is set to "0".
(Bit 15 is set to "0" when bits 14 to 12 all are set to "0".) Bits 14 and 13 are also set to "0" when the lower byte of the UARTi receive buffer register (addresses $03A6_{16}$, $03AE_{16}$ and $037E_{16}$) is read out.
Note 2: Arbitration lost detecting flag is allocated to U2RB and noting but "0" may be written. Nothing is assigned in bit 11 of U0RB and U1RB. These bits can neither be set or reset. When read, the value of this bit is "0".

UARTi bit rate generator

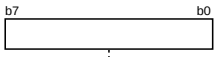

Symbol	Address	When reset
U0BRG	$03A1_{16}$	Indeterminate
U1BRG	$03A9_{16}$	Indeterminate
U2BRG	0379_{16}	Indeterminate

Function	Values that can be set	R	W
Assuming that set value = n, BRGi divides the count source by n + 1	00_{16} to FF_{16}	×	○

Figure 1.19.4. Serial I/O-related registers (1)

UARTi transmit/receive mode register

b7	b6	b5	b4	b3	b2	b1	b0

Symbol	Address	When reset
UiMR(i=0,1)	$03A0_{16}$, $03A8_{16}$	00_{16}

Bit symbol	Bit name	Function (During clock synchronous serial I/O mode)	Function (During UART mode)	R	W
SMD0	Serial I/O mode select bit	Must be fixed to 001 b2 b1 b0 0 0 0 : Serial I/O invalid 0 1 0 : Inhibited 0 1 1 : Inhibited 1 1 1 : Inhibited	b2 b1 b0 1 0 0 : Transfer data 7 bits long 1 0 1 : Transfer data 8 bits long 1 1 0 : Transfer data 9 bits long 0 0 0 : Serial I/O invalid 0 1 0 : Inhibited 0 1 1 : Inhibited 1 1 1 : Inhibited	○	○
SMD1				○	○
SMD2				○	○
CKDIR	Internal/external clock select bit	0 : Internal clock 1 : External clock	0 : Internal clock 1 : External clock	○	○
STPS	Stop bit length select bit	Invalid	0 : One stop bit 1 : Two stop bits	○	○
PRY	Odd/even parity select bit	Invalid	Valid when bit 6 = “1” 0 : Odd parity 1 : Even parity	○	○
PRYE	Parity enable bit	Invalid	0 : Parity disabled 1 : Parity enabled	○	○
SLEP	Sleep select bit	Must always be “0”	0 : Sleep mode deselected 1 : Sleep mode selected	○	○

UART2 transmit/receive mode register

b7	b6	b5	b4	b3	b2	b1	b0

Symbol	Address	When reset
U2MR	0378_{16}	00_{16}

Bit symbol	Bit name	Function (Note 3) (During clock synchronous serial I/O mode)	Function (During UART mode)	R	W
SMD0	Serial I/O mode select bit	Must be fixed to 001 b2 b1 b0 0 0 0 : Serial I/O invalid 0 1 0 : (Note) 0 1 1 : Inhibited 1 1 1 : Inhibited	b2 b1 b0 1 0 0 : Transfer data 7 bits long 1 0 1 : Transfer data 8 bits long 1 1 0 : Transfer data 9 bits long 0 0 0 : Serial I/O invalid 0 1 0 : Inhibited 0 1 1 : Inhibited 1 1 1 : Inhibited	○	○
SMD1				○	○
SMD2				○	○
CKDIR	Internal/external clock select bit	0 : Internal clock 1 : External clock	0 : Internal clock 1 : External clock (Note 2)	○	○
STPS	Stop bit length select bit	Invalid	0 : One stop bit 1 : Two stop bits	○	○
PRY	Odd/even parity select bit	Invalid	Valid when bit 6 = “1” 0 : Odd parity 1 : Even parity	○	○
PRYE	Parity enable bit	Invalid	0 : Parity disabled 1 : Parity enabled	○	○
IOPOL	TxD, RxD I/O polarity reverse bit	0 : No reverse 1 : Reverse Usually set to “0”	0 : No reverse 1 : Reverse Usually set to “0”	○	○

Note 1: Bit 2 to bit 0 are set to “010_2” when IIC mode is used.
Note 2: In M30623(80-pin package), do not select the external clock, because there is no external pin.
Note 3: In M30623(80-pin package), do not use UART2 as clock synchronous serial I/O.

Figure 1.19.5. Serial I/O-related registers (2)

UARTi transmit/receive control register 0

b7	b6	b5	b4	b3	b2	b1	b0

Symbol	Address	When reset
UiC0(i=0,1)	$03A4_{16}$, $03AC_{16}$	08_{16}

Bit symbol	Bit name	Function (During clock synchronous serial I/O mode)	Function (During UART mode)	R	W
CLK0	BRG count source select bit	b1 b0 0 0 : f_1 is selected 0 1 : f_8 is selected 1 0 : f_{32} is selected 1 1 : Inhibited	b1 b0 0 0 : f_1 is selected 0 1 : f_8 is selected 1 0 : f_{32} is selected 1 1 : Inhibited	○	○
CLK1				○	○
CRS	$\overline{CTS}/\overline{RTS}$ function select bit	Valid when bit 4 = "0" 0 : $\overline{CTS}$ function is selected (Note 1) 1 : $\overline{RTS}$ function is selected (Note 2)	Valid when bit 4 = "0" 0 : $\overline{CTS}$ function is selected (Note 1) 1 : $\overline{RTS}$ function is selected (Note 2)	○	○
TXEPT	Transmit register empty flag	0 : Data present in transmit register (during transmission) 1 : No data present in transmit register (transmission completed)	0 : Data present in transmit register (during transmission) 1 : No data present in transmit register (transmission completed)	○	×
CRD	$\overline{CTS}/\overline{RTS}$ disable bit	0 : $\overline{CTS}/\overline{RTS}$ function enabled 1 : $\overline{CTS}/\overline{RTS}$ function disabled ($P6_0$ and $P6_4$ function as programmable I/O port)	0 : $\overline{CTS}/\overline{RTS}$ function enabled 1 : $\overline{CTS}/\overline{RTS}$ function disabled ($P6_0$ and $P6_4$ function as programmable I/O port)	○	○
NCH	Data output select bit	0 : TXDi pin is CMOS output 1 : TXDi pin is N-channel open-drain output	0: TXDi pin is CMOS output 1: TXDi pin is N-channel open-drain output	○	○
CKPOL	CLK polarity select bit	0 : Transmit data is output at falling edge of transfer clock and receive data is input at rising edge 1 : Transmit data is output at rising edge of transfer clock and receive data is input at falling edge	Must always be "0"	○	○
UFORM	Transfer format select bit	0 : LSB first 1 : MSB first	Must always be "0"	○	○

Note 1: Set the corresponding port direction register to "0".
Note 2: The settings of the corresponding port register and port direction register are invalid.

UART2 transmit/receive control register 0

b7	b6	b5	b4	b3	b2	b1	b0
		X					

Symbol	Address	When reset
U2C0	$037C_{16}$	08_{16}

Bit symbol	Bit name	Function (Note 5) (During clock synchronous serial I/O mode)	Function (During UART mode)	R	W
CLK0	BRG count source select bit	b1 b0 0 0 : f_1 is selected 0 1 : f_8 is selected 1 0 : f_{32} is selected 1 1 : Inhibited	b1 b0 0 0 : f_1 is selected 0 1 : f_8 is selected 1 0 : f_{32} is selected 1 1 : Inhibited	○	○
CLK1				○	○
CRS	$\overline{CTS}/\overline{RTS}$ function select bit (Note 4)	Valid when bit 4 = "0" 0 : $\overline{CTS}$ function is selected (Note 1) 1 : $\overline{RTS}$ function is selected (Note 2)	Valid when bit 4 = "0" 0 : $\overline{CTS}$ function is selected (Note 1) 1 : $\overline{RTS}$ function is selected (Note 2)	○	○
TXEPT	Transmit register empty flag	0 : Data present in transmit register (during transmission) 1 : No data present in transmit register (transmission completed)	0 : Data present in transmit register (during transmission) 1 : No data present in transmit register (transmission completed)	○	×
CRD	$\overline{CTS}/\overline{RTS}$ disable bit (Note 4)	0 : $\overline{CTS}/\overline{RTS}$ function enabled 1 : CTS/RTS function disabled ($P7_3$ functions programmable I/O port)	0 : $\overline{CTS}/\overline{RTS}$ function enabled 1 : CTS/RTS function disabled ($P7_3$ functions programmable I/O port)	○	○
Nothing is assigned. In an attempt to write to this bit, write "0". The value, if read, turns out to be "0".				—	—
CKPOL	CLK polarity select bit (Note 4)	0 : Transmit data is output at falling edge of transfer clock and receive data is input at rising edge 1 : Transmit data is output at rising edge of transfer clock and receive data is input at falling edge	Must always be "0"	○	○
UFORM	Transfer format select bit (Note 3)	0 : LSB first 1 : MSB first	0 : LSB first 1 : MSB first	○	○

Note 1: Set the corresponding port direction register to "0".
Note 2: The settings of the corresponding port register and port direction register are invalid.
Note 3: Only clock synchronous serial I/O mode and 8-bit UART mode are valid.
Note 4: In M30623(80-pin package), these bits are invalid, because CLK_2 and $\overline{CTS_2}/\overline{RTS_2}$ have no external pin.
Note 5: In M30623(80-pin package), do not use UART2 as clock synchronous serial I/O.

Figure 1.19.6. Serial I/O-related registers (3)

UARTi transmit/receive control register 1

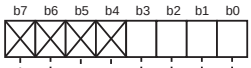

Symbol	Address	When reset
UiC1(i=0,1)	$03A5_{16}$,$03AD_{16}$	02_{16}

Bit symbol	Bit name	Function (During clock synchronous serial I/O mode)	Function (During UART mode)	R	W
TE	Transmit enable bit	0 : Transmission disabled 1 : Transmission enabled	0 : Transmission disabled 1 : Transmission enabled	○	○
TI	Transmit buffer empty flag	0 : Data present in transmit buffer register 1 : No data present in transmit buffer register	0 : Data present in transmit buffer register 1 : No data present in transmit buffer register	○	×
RE	Receive enable bit	0 : Reception disabled 1 : Reception enabled	0 : Reception disabled 1 : Reception enabled	○	○
RI	Receive complete flag	0 : No data present in receive buffer register 1 : Data present in receive buffer register	0 : No data present in receive buffer register 1 : Data present in receive buffer register	○	×
Nothing is assigned. In an attempt to write to these bits, write “0”. The value, if read, turns out to be “0”.				–	–

UART2 transmit/receive control register 1

Symbol	Address	When reset
U2C1	$037D_{16}$	02_{16}

Bit symbol	Bit name	Function (Note 1) (During clock synchronous serial I/O mode)	Function (During UART mode)	R	W
TE	Transmit enable bit	0 : Transmission disabled 1 : Transmission enabled	0 : Transmission disabled 1 : Transmission enabled	○	○
TI	Transmit buffer empty flag	0 : Data present in transmit buffer register 1 : No data present in transmit buffer register	0 : Data present in transmit buffer register 1 : No data present in transmit buffer register	○	×
RE	Receive enable bit	0 : Reception disabled 1 : Reception enabled	0 : Reception disabled 1 : Reception enabled	○	○
RI	Receive complete flag	0 : No data present in receive buffer register 1 : Data present in receive buffer register	0 : No data present in receive buffer register 1 : Data present in receive buffer register	○	×
U2IRS	UART2 transmit interrupt cause select bit	0 : Transmit buffer empty (TI = 1) 1 : Transmit is completed (TXEPT = 1)	0 : Transmit buffer empty (TI = 1) 1 : Transmit is completed (TXEPT = 1)	○	○
U2RRM	UART2 continuous receive mode enable bit	0 : Continuous receive mode disabled 1 : Continuous receive mode enabled	Invalid	○	○
U2LCH	Data logic select bit	0 : No reverse 1 : Reverse	0 : No reverse 1 : Reverse	○	○
U2ERE	Error signal output enable bit	Must be fixed to “0”	0 : Output disabled 1 : Output enabled	○	○

Note 1: In M30623(80-pin package), do not use UART2 as clock synchronous serial I/O.

Figure 1.19.7. Serial I/O-related registers (4)

UART transmit/receive control register 2

b7	b6	b5	b4	b3	b2	b1	b0
X							

Symbol	Address	When reset
UCON	$03B0_{16}$	$X0000000_2$

Bit symbol	Bit name	Function (During clock synchronous serial I/O mode)	Function (During UART mode)	R	W
U0IRS	UART0 transmit interrupt cause select bit	0 : Transmit buffer empty (TI = 1) 1 : Transmission completed (TXEPT = 1)	0 : Transmit buffer empty (TI = 1) 1 : Transmission completed (TXEPT = 1)	○	○
U1IRS	UART1 transmit interrupt cause select bit	0 : Transmit buffer empty (TI = 1) 1 : Transmission completed (TXEPT = 1)	0 : Transmit buffer empty (TI = 1) 1 : Transmission completed (TXEPT = 1)	○	○
U0RRM	UART0 continuous receive mode enable bit	0 : Continuous receive mode disabled 1 : Continuous receive mode enable	Invalid	○	○
U1RRM	UART1 continuous receive mode enable bit	0 : Continuous receive mode disabled 1 : Continuous receive mode enabled	Invalid	○	○
CLKMD0	CLK/CLKS select bit 0	Valid when bit 5 = “1” 0 : Clock output to CLK1 1 : Clock output to CLKS1	Invalid	○	○
CLKMD1	CLK/CLKS select bit 1 (Note)	0 : Normal mode (CLK output is CLK1 only) 1 : Transfer clock output from multiple pins function selected	Must always be “0”	○	○
RCSP	Separate $\overline{CTS}/\overline{RTS}$ bit	0 : $\overline{CTS}/\overline{RTS}$ shared pin 1 : $\overline{CTS}/\overline{RTS}$ separated	0 : $\overline{CTS}/\overline{RTS}$ shared pin 1 : $\overline{CTS}/\overline{RTS}$ separated	○	○
Nothing is assigned. In an attempt to write to this bit, write “0”. The value, if read, turns out to be indeterminate.				—	—

Note: When using multiple pins to output the transfer clock, the following requirements must be met:
• UART1 internal/external clock select bit (bit 3 at address $03A8_{16}$) = “0”.

UART2 special mode register

b7	b6	b5	b4	b3	b2	b1	b0
X							

Symbol	Address	When reset
U2SMR	0377_{16}	00_{16}

Bit symbol	Bit name	Function (Note 1) (During clock synchronous serial I/O mode)	Function (During UART mode)	R	W
IICM	IIC mode selection bit	0 : Normal mode 1 : IIC mode	Must always be “0”	○	○
ABC	Arbitration lost detecting flag control bit	0 : Update per bit 1 : Update per byte	Must always be “0”	○	○
BBS	Bus busy flag	0 : STOP condition detected 1 : START condition detected	Must always be “0”	○	○ (Note 2)
LSYN	SCLL sync output enable bit	0 : Disabled 1 : Enabled	Must always be “0”	○	○
ABSCS	Bus collision detect sampling clock select bit	Must always be “0”	0 : Rising edge of transfer clock 1 : Underflow signal of timer A0	○	○
ACSE	Auto clear function select bit of transmit enable bit	Must always be “0”	0 : No auto clear function 1 : Auto clear at occurrence of bus collision	○	○
SSS	Transmit start condition select bit	Must always be “0”	0 : Ordinary 1 : Falling edge of RxD2	○	○
Nothing is assigned. In an attempt to write to this bit, write “0”. The value, if read, turns out to be “0”.				—	—

Note 1: In M30623(80-pin package), do not use UART2 as clock synchronous serial I/O.
Note 2: Nothing but "0" may be written.

Figure 1.19.8. Serial I/O-related registers (5)

(1) Clock synchronous serial I/O mode

The clock synchronous serial I/O mode uses a transfer clock to transmit and receive data. Tables 1.19.2 and 1.19.3 list the specifications of the clock synchronous serial I/O mode. Figure 1.19.9 shows the UARTi transmit/receive mode register.

In M30623(80-pin package), do not use UART2 as clock synchronous serial I/O.

Table 1.19.2. Specifications of clock synchronous serial I/O mode (1)

Item	Specification
Transfer data format	• Transfer data length: 8 bits
Transfer clock	• When internal clock is selected (bit 3 at addresses $03A0_{16}$, $03A8_{16}$, 0378_{16} = "0") : fi/ 2(n+1) (Note 1) fi = f_1, f_8, f_{32} • When external clock is selected (bit 3 at addresses $03A0_{16}$, $03A8_{16}$, 0378_{16} = "1") : Input from CLKi pin
Transmission/reception control	• $\overline{CTS}$ function/$\overline{RTS}$ function/$\overline{CTS}$, $\overline{RTS}$ function chosen to be invalid
Transmission start condition	• To start transmission, the following requirements must be met: – Transmit enable bit (bit 0 at addresses $03A5_{16}$, $03AD_{16}$, $037D_{16}$) = "1" – Transmit buffer empty flag (bit 1 at addresses $03A5_{16}$, $03AD_{16}$, $037D_{16}$) = "0" – When $\overline{CTS}$ function selected, $\overline{CTS}$ input level = "L" • Furthermore, if external clock is selected, the following requirements must also be met: – CLKi polarity select bit (bit 6 at addresses $03A4_{16}$, $03AC_{16}$, $037C_{16}$) = "0": CLKi input level = "H" – CLKi polarity select bit (bit 6 at addresses $03A4_{16}$, $03AC_{16}$, $037C_{16}$) = "1": CLKi input level = "L"
Reception start condition	• To start reception, the following requirements must be met: – Receive enable bit (bit 2 at addresses $03A5_{16}$, $03AD_{16}$, $037D_{16}$) = "1" – Transmit enable bit (bit 0 at addresses $03A5_{16}$, $03AD_{16}$, $037D_{16}$) = "1" – Transmit buffer empty flag (bit 1 at addresses $03A5_{16}$, $03AD_{16}$, $037D_{16}$) = "0" • Furthermore, if external clock is selected, the following requirements must also be met: – CLKi polarity select bit (bit 6 at addresses $03A4_{16}$, $03AC_{16}$, $037C_{16}$) = "0": CLKi input level = "H" – CLKi polarity select bit (bit 6 at addresses $03A4_{16}$, $03AC_{16}$, $037C_{16}$) = "1": CLKi input level = "L"
Interrupt request generation timing	• When transmitting – Transmit interrupt cause select bit (bits 0, 1 at address $03B0_{16}$, bit 4 at address $037D_{16}$) = "0": Interrupts requested when data transfer from UARTi transfer buffer register to UARTi transmit register is completed – Transmit interrupt cause select bit (bits 0, 1 at address $03B0_{16}$, bit 4 at address $037D_{16}$) = "1": Interrupts requested when data transmission from UARTi transfer register is completed • When receiving – Interrupts requested when data transfer from UARTi receive register to UARTi receive buffer register is completed
Error detection	• Overrun error (Note 2) This error occurs when the next data is ready before contents of UARTi receive buffer register are read out

Note 1: "n" denotes the value 00_{16} to FF_{16} that is set to the UART bit rate generator.

Note 2: If an overrun error occurs, the UARTi receive buffer will have the next data written in. Note also that the UARTi receive interrupt request bit is not set to "1".

Table 1.19.4. Specifications of clock synchronous serial I/O mode (2)

Item	Specification
Select function	• CLK polarity selection Whether transmit data is output/input at the rising edge or falling edge of the transfer clock can be selected • LSB first/MSB first selection Whether transmission/reception begins with bit 0 or bit 7 can be selected • Continuous receive mode selection Reception is enabled simultaneously by a read from the receive buffer register • Transfer clock output from multiple pins selection (UART1) (Note) UART1 transfer clock can be chosen by software to be output from one of the two pins set • Separate $\overline{CTS}$/$\overline{RTS}$ pins (UART0) (Note) UART0 $\overline{CTS}$ and $\overline{RTS}$ pins each can be assigned to separate pins • Switching serial data logic (UART2) Whether to reverse data in writing to the transmission buffer register or reading the reception buffer register can be selected. • TxD, RxD I/O polarity reverse (UART2) This function is reversing TxD port output and RxD port input. All I/O data level is reversed.

Note: The transfer clock output from multiple pins and the separate $\overline{CTS}$/$\overline{RTS}$ pins functions cannot be selected simultaneously.

UARTi transmit/receive mode registers

b7	b6	b5	b4	b3	b2	b1	b0
0					0	0	1

Symbol	Address	When reset
UiMR(i=0,1)	$03A0_{16}$, $03A8_{16}$	00_{16}

Bit symbol	Bit name	Function	R	W
SMD0	Serial I/O mode select bit	b2 b1 b0 0 0 1 : Clock synchronous serial I/O mode	○	○
SMD1			○	○
SMD2			○	○
CKDIR	Internal/external clock select bit	0 : Internal clock 1 : External clock	○	○
STPS	Invalid in clock synchronous serial I/O mode		○	○
PRY			○	○
PRYE			○	○
SLEP	0 (Must always be “0” in clock synchronous serial I/O mode)		○	○

UART2 transmit/receive mode register

b7	b6	b5	b4	b3	b2	b1	b0
0					0	0	1

Symbol	Address	When reset
U2MR	0378_{16}	00_{16}

Bit symbol	Bit name	Function	R	W
SMD0	Serial I/O mode select bit	b2 b1 b0 0 0 1 : Clock synchronous serial I/O mode	○	○
SMD1			○	○
SMD2			○	○
CKDIR	Internal/external clock select bit	0 : Internal clock 1 : External clock	○	○
STPS	Invalid in clock synchronous serial I/O mode		○	○
PRY			○	○
PRYE			○	○
IOPOL	TxD, RxD I/O polarity reverse bit (Note)	0 : No reverse 1 : Reverse	○	○

Note: Usually set to “0”.

Figure 1.19.9. UARTi transmit/receive mode register in clock synchronous serial I/O mode

Table 1.19.4 lists the functions of the input/output pins during clock synchronous serial I/O mode. This table shows the pin functions when the transfer clock output from multiple pins and the separate $\overline{CTS}$/$\overline{RTS}$ pins functions are not selected. Note that for a period from when the UARTi operation mode is selected to when transfer starts, the TxDi pin outputs a “H”. (If the N-channel open-drain is selected, this pin is in floating state.)

Table 1.19.4. Input/output pin functions in clock synchronous serial I/O mode

Pin name	Function	Method of selection
TxDi ($P6_3$, $P6_7$, $P7_0$)	Serial data output	(Outputs dummy data when performing reception only)
RxDi ($P6_2$, $P6_6$, $P7_1$)	Serial data input	Port $P6_2$, $P6_6$ and $P7_1$ direction register (bits 2 and 6 at address $03EE_{16}$, bit 1 at address $03EF_{16}$)= “0” (Can be used as an input port when performing transmission only)
CLKi ($P6_1$, $P6_5$, $P7_2$)	Transfer clock output	Internal/external clock select bit (bit 3 at address $03A0_{16}$, $03A8_{16}$, 0378_{16}) = “0”
	Transfer clock input	Internal/external clock select bit (bit 3 at address $03A0_{16}$, $03A8_{16}$, 0378_{16}) = “1” Port $P6_1$, $P6_5$ and $P7_2$ direction register (bits 1 and 5 at address $03EE_{16}$, bit 2 at address $03EF_{16}$) = “0”
$\overline{CTS}$i/$\overline{RTS}$i ($P6_0$, $P6_4$, $P7_3$)	$\overline{CTS}$ input	$\overline{CTS}$/$\overline{RTS}$ disable bit (bit 4 at address $03A4_{16}$, $03AC_{16}$, $037C_{16}$) =“0” $\overline{CTS}$/$\overline{RTS}$ function select bit (bit 2 at address $03A4_{16}$, $03AC_{16}$, $037C_{16}$) = “0” Port $P6_0$, $P6_4$ and $P7_3$ direction register (bits 0 and 4 at address $03EE_{16}$, bit 3 at address $03EF_{16}$) = “0”
	$\overline{RTS}$ output	$\overline{CTS}$/$\overline{RTS}$ disable bit (bit 4 at address $03A4_{16}$, $03AC_{16}$, $037C_{16}$) = “0” $\overline{CTS}$/$\overline{RTS}$ function select bit (bit 2 at address $03A4_{16}$, $03AC_{16}$, $037C_{16}$) = “1”
	Programmable I/O port	$\overline{CTS}$/$\overline{RTS}$ disable bit (bit 4 at address $03A4_{16}$, $03AC_{16}$, $037C_{16}$) = “1”

(when transfer clock output from multiple pins and separate $\overline{CTS}$/$\overline{RTS}$ pins functions are not selected)

• Example of transmit timing (when internal clock is selected)

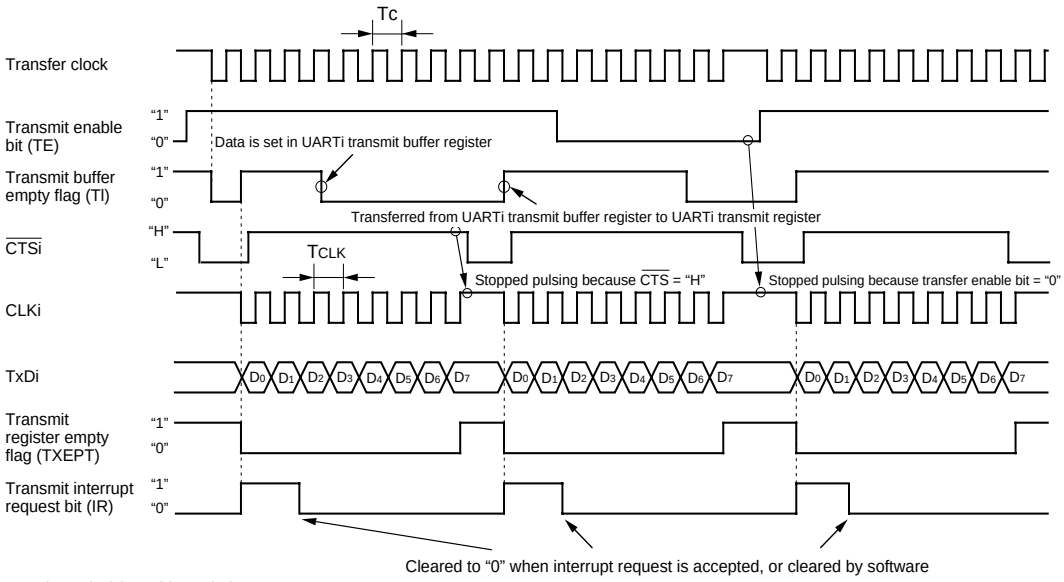

Shown in ( ) are bit symbols.

The above timing applies to the following settings:
- Internal clock is selected.
- CTS function is selected.
- CLK polarity select bit = "0".
- Transmit interrupt cause select bit = "0"

Tc = TCLK = 2(n + 1) / fi
fi: frequency of BRGi count source (f_1, f_8, f_{32})
n: value set to BRGi

• Example of receive timing (when external clock is selected)

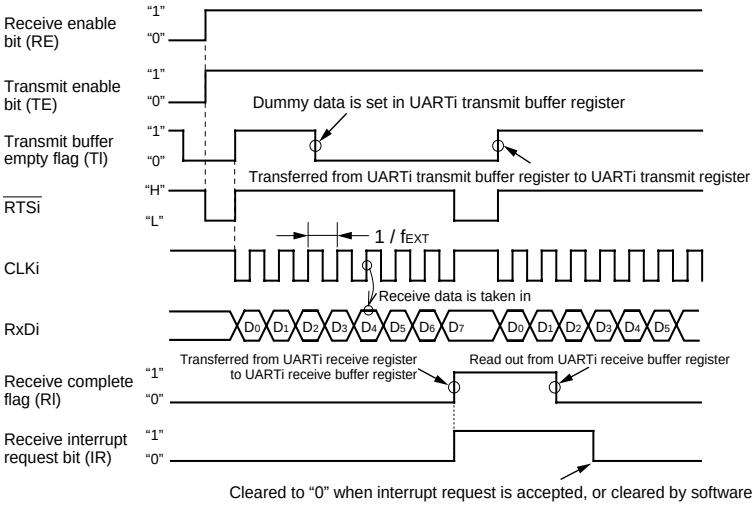

Shown in ( ) are bit symbols.

The above timing applies to the following settings:
- External clock is selected.
- RTS function is selected.
- CLK polarity select bit = "0".

f_{EXT}: frequency of external clock

Meet the following conditions are met when the CLK input before data reception = "H"
- Transmit enable bit → "1"
- Receive enable bit → "1"
- Dummy data write to UARTi transmit buffer register

Figure 1.19.10. Typical transmit/receive timings in clock synchronous serial I/O mode

(a) Polarity select function

As shown in Figure 1.19.11, the CLK polarity select bit (bit 6 at addresses 03A4$_{16}$, 03AC$_{16}$, 037C$_{16}$) allows selection of the polarity of the transfer clock.

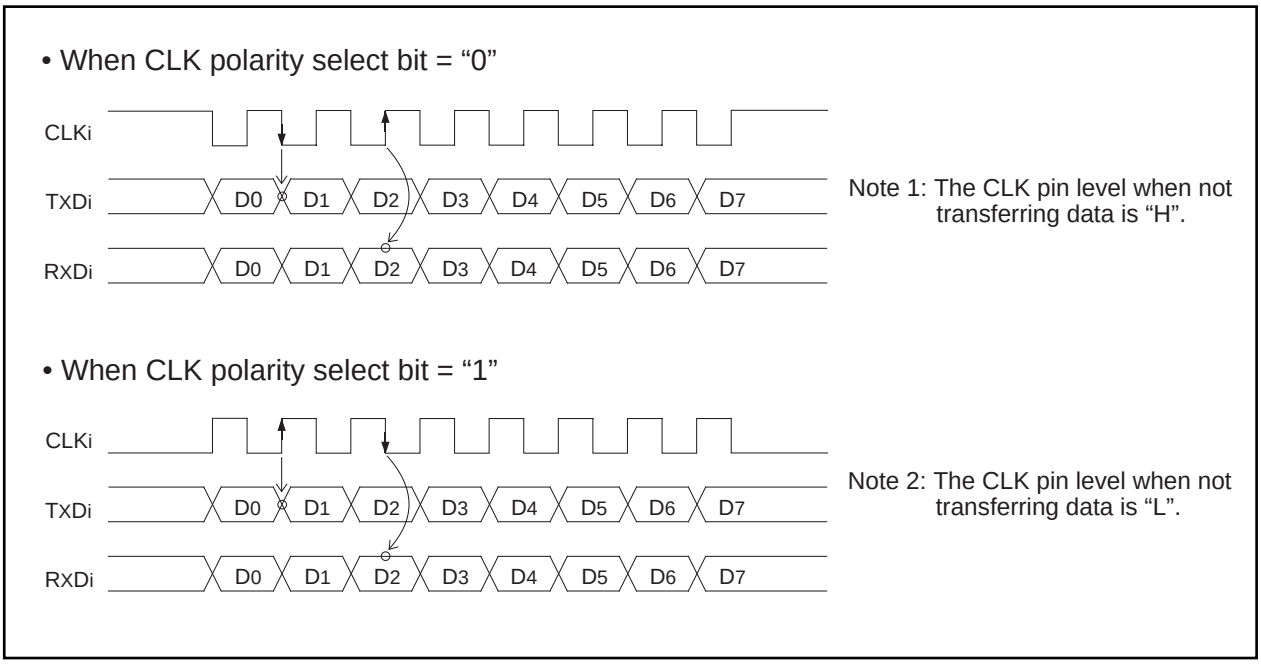

Figure 1.19.11. Polarity of transfer clock

(b) LSB first/MSB first select function

As shown in Figure 1.19.12, when the transfer format select bit (bit 7 at addresses 03A4$_{16}$, 03AC$_{16}$, 037C$_{16}$) = “0”, the transfer format is “LSB first”; when the bit = “1”, the transfer format is “MSB first”.

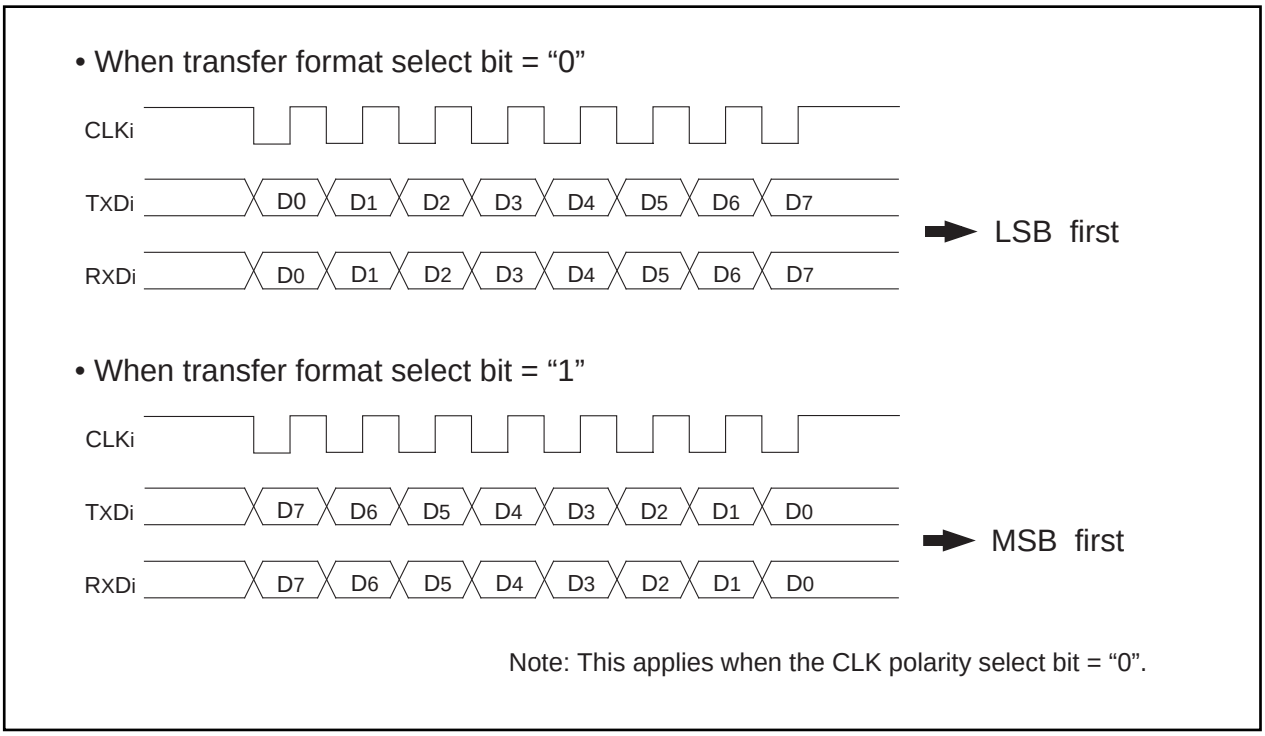

Figure 1.19.12. Transfer format

(c) Transfer clock output from multiple pins function (UART1)

This function allows the setting two transfer clock output pins and choosing one of the two to output a clock by using the CLK and CLKS select bit (bits 4 and 5 at address 03B0$_{16}$). (See Figure 1.19.3.) The multiple pins function is valid only when the internal clock is selected for UART1. Note that when this function is selected, UART1 $\overline{CTS}$/$\overline{RTS}$ function cannot be used.

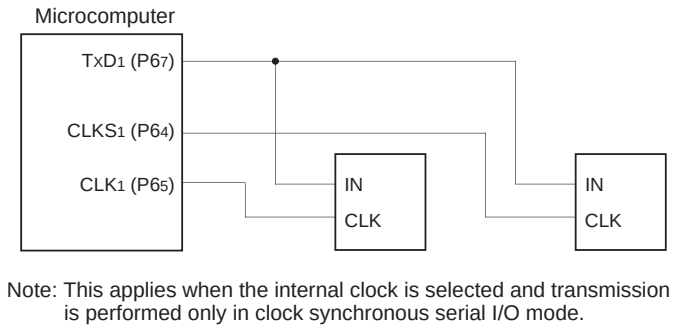

Note: This applies when the internal clock is selected and transmission is performed only in clock synchronous serial I/O mode.

Figure 1.19.13. The transfer clock output from the multiple pins function usage

(d) Continuous receive mode

If the continuous receive mode enable bit (bits 2 and 3 at address 03B0$_{16}$, bit 5 at address 037D$_{16}$) is set to "1", the unit is placed in continuous receive mode. In this mode, when the receive buffer register is read out, the unit simultaneously goes to a receive enable state without having to set dummy data to the transmit buffer register back again.

(e) Separate $\overline{CTS}$/$\overline{RTS}$ pins function (UART0)

This function works the same way as in the clock asynchronous serial I/O (UART) mode. The method of setting and the input/output pin functions are both the same, so refer to select function in the next section, "(2) Clock asynchronous serial I/O (UART) mode." Note that this function is invalid if the transfer clock output from the multiple pins function is selected.

(f) Serial data logic switch function (UART2)

When the data logic select bit (bit6 at address 037D$_{16}$) = "1", and writing to transmit buffer register or reading from receive buffer register, data is reversed. Figure 1.19.14 shows the example of serial data logic switch timing.

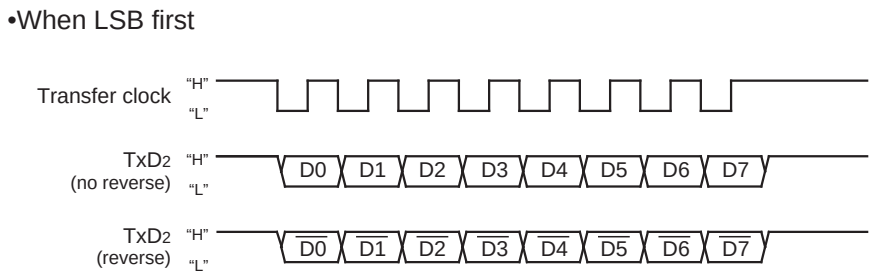

Figure 1.19.14. Serial data logic switch timing

(2) Clock asynchronous serial I/O (UART) mode

The UART mode allows transmitting and receiving data after setting the desired transfer rate and transfer data format. Tables 1.19.5 and 1.19.6 list the specifications of the UART mode. Figure 1.19.15 shows the UARTi transmit/receive mode register.

Table 1.19.5. Specifications of UART Mode (1)

Item	Specification
Transfer data format	• Character bit (transfer data): 7 bits, 8 bits, or 9 bits as selected • Start bit: 1 bit • Parity bit: Odd, even, or nothing as selected • Stop bit: 1 bit or 2 bits as selected
Transfer clock	• When internal clock is selected (bit 3 at addresses $03A0_{16}$, $03A8_{16}$, 0378_{16} = "0") : fi/16(n+1) (Note 1) fi = f_1, f_8, f_{32} • When external clock is selected (bit 3 at addresses $03A0_{16}$, $03A8_{16}$, 0378_{16} ="1") : f_{EXT}/16(n+1) (Note 1) (Note 2)
Transmission/reception control	• $\overline{CTS}$ function/$\overline{RTS}$ function/$\overline{CTS}$, $\overline{RTS}$ function chosen to be invalid (Note 4)
Transmission start condition	• To start transmission, the following requirements must be met: - Transmit enable bit (bit 0 at addresses $03A5_{16}$, $03AD_{16}$, $037D_{16}$) = "1" - Transmit buffer empty flag (bit 1 at addresses $03A5_{16}$, $03AD_{16}$, $037D_{16}$) = "0" - When $\overline{CTS}$ function selected, $\overline{CTS}$ input level = "L" (Note 4)
Reception start condition	• To start reception, the following requirements must be met: - Receive enable bit (bit 2 at addresses $03A5_{16}$, $03AD_{16}$, $037D_{16}$) = "1" - Start bit detection
Interrupt request generation timing	• When transmitting - Transmit interrupt cause select bits (bits 0,1 at address $03B0_{16}$, bit4 at address $037D_{16}$) = "0": Interrupts requested when data transfer from UARTi transfer buffer register to UARTi transmit register is completed - Transmit interrupt cause select bits (bits 0, 1 at address $03B0_{16}$, bit4 at address $037D_{16}$) = "1": Interrupts requested when data transmission from UARTi transfer register is completed • When receiving - Interrupts requested when data transfer from UARTi receive register to UARTi receive buffer register is completed
Error detection	• Overrun error (Note 3) This error occurs when the next data is ready before contents of UARTi receive buffer register are read out • Framing error This error occurs when the number of stop bits set is not detected • Parity error This error occurs when if parity is enabled, the number of 1's in parity and character bits does not match the number of 1's set • Error sum flag This flag is set (= 1) when any of the overrun, framing, and parity errors is encountered

Note 1: 'n' denotes the value 00_{16} to FF_{16} that is set to the UARTi bit rate generator.

Note 2: f_{EXT} is input from the CLKi pin. In M30623(80-pin package), do not select the external clock as transfer clock, because there is no external pin of CLK_2.

Note 3: If an overrun error occurs, the UARTi receive buffer will have the next data written in. Note also that the UARTi receive interrupt request bit is not set to "1".

Note 4: In M30623(80-pin package), do not use these functions, because there is no external pin of $\overline{CTS_2}$/$\overline{RTS_2}$.

Table 1.19.6. Specifications of UART Mode (2)

Item	Specification
Select function	• Separate $\overline{CTS}$/$\overline{RTS}$ pins (UART0) UART0 $\overline{CTS}$ and $\overline{RTS}$ pins each can be assigned to separate pins • Sleep mode selection (UART0, UART1) This mode is used to transfer data to and from one of multiple slave micro-computers • Serial data logic switch (UART2) This function is reversing logic value of transferring data. Start bit, parity bit and stop bit are not reversed. • TxD, RxD I/O polarity switch This function is reversing TxD port output and RxD port input. All I/O data level is reversed.

UARTi transmit / receive mode registers

b7	b6	b5	b4	b3	b2	b1	b0

Symbol	Address	When reset
UiMR(i=0,1)	$03A0_{16}$, $03A8_{16}$	00_{16}

Bit symbol	Bit name	Function	R	W
SMD0	Serial I/O mode select bit	b2 b1 b0 1 0 0 : Transfer data 7 bits long 1 0 1 : Transfer data 8 bits long 1 1 0 : Transfer data 9 bits long	○	○
SMD1			○	○
SMD2			○	○
CKDIR	Internal / external clock select bit	0 : Internal clock 1 : External clock	○	○
STPS	Stop bit length select bit	0 : One stop bit 1 : Two stop bits	○	○
PRY	Odd / even parity select bit	Valid when bit 6 = “1” 0 : Odd parity 1 : Even parity	○	○
PRYE	Parity enable bit	0 : Parity disabled 1 : Parity enabled	○	○
SLEP	Sleep select bit	0 : Sleep mode deselected 1 : Sleep mode selected	○	○

UART2 transmit / receive mode register

b7	b6	b5	b4	b3	b2	b1	b0

Symbol	Address	When reset
U2MR	0378_{16}	00_{16}

Bit symbol	Bit name	Function	R	W
SMD0	Serial I/O mode select bit	b2 b1 b0 1 0 0 : Transfer data 7 bits long 1 0 1 : Transfer data 8 bits long 1 1 0 : Transfer data 9 bits long	○	○
SMD1			○	○
SMD2			○	○
CKDIR	Internal / external clock select bit	0 : Internal clock 1 : External clock (Note 2)	○	○
STPS	Stop bit length select bit	0 : One stop bit 1 : Two stop bits	○	○
PRY	Odd / even parity select bit	Valid when bit 6 = “1” 0 : Odd parity 1 : Even parity	○	○
PRYE	Parity enable bit	0 : Parity disabled 1 : Parity enabled	○	○
IOPOL	TxD, RxD I/O polarity reverse bit (Note 1)	0 : No reverse 1 : Reverse	○	○

Note 1: Usually set to “0”.
Note 2: In M30623(80-pin package), do not select the external clock as transfer clock, because there is no external pin of CLK_2.

Figure 1.19.15. UARTi transmit/receive mode register in UART mode

Table 1.19.7 lists the functions of the input/output pins during UART mode. This table shows the pin functions when the separate $\overline{CTS}$/$\overline{RTS}$ pins function is not selected. Note that for a period from when the UARTi operation mode is selected to when transfer starts, the TxDi pin outputs a "H". (If the N-channel open-drain is selected, this pin is in floating state.)

Table 1.19.7. Input/output pin functions in UART mode

Pin name	Function	Method of selection
TxDi ($P6_3$, $P6_7$, $P7_0$)	Serial data output	
RxDi ($P6_2$, $P6_6$, $P7_1$)	Serial data input	Port $P6_2$, $P6_6$ and $P7_1$ direction register (bits 2 and 6 at address $03EE_{16}$, bit 1 at address $03EF_{16}$)= "0" (Can be used as an input port when performing transmission only)
CLKi ($P6_1$, $P6_5$, $P7_2$) (Note 1)	Programmable I/O port	Internal/external clock select bit (bit 3 at address $03A0_{16}$, $03A8_{16}$, 0378_{16}) = "0"
	Transfer clock input	Internal/external clock select bit (bit 3 at address $03A0_{16}$, $03A8_{16}$, 0378_{16}) = "1" Port $P6_1$, $P6_5$ and $P7_2$ direction register (bits 1 and 5 at address $03EE_{16}$, bit 2 at address $03EF_{16}$) = "0"
$\overline{CTS}$i/$\overline{RTS}$i ($P6_0$, $P6_4$, $P7_3$) (Note 2)	$\overline{CTS}$ input	$\overline{CTS}$/$\overline{RTS}$ disable bit (bit 4 at address $03A4_{16}$, $03AC_{16}$, $037C_{16}$) ="0" $\overline{CTS}$/$\overline{RTS}$ function select bit (bit 2 at address $03A4_{16}$, $03AC_{16}$, $037C_{16}$) = "0" Port $P6_0$, $P6_4$ and $P7_3$ direction register (bits 0 and 4 at address $03EE_{16}$, bit 3 at address $03EF_{16}$) = "0"
	$\overline{RTS}$ output	$\overline{CTS}$/$\overline{RTS}$ disable bit (bit 4 at address $03A4_{16}$, $03AC_{16}$, $037C_{16}$) = "0" $\overline{CTS}$/$\overline{RTS}$ function select bit (bit 2 at address $03A4_{16}$, $03AC_{16}$, $037C_{16}$) = "1"
	Programmable I/O port	$\overline{CTS}$/$\overline{RTS}$ disable bit (bit 4 at address $03A4_{16}$, $03AC_{16}$, $037C_{16}$) = "1"

(when separate $\overline{CTS}$/$\overline{RTS}$ pins function is not selected)

Note 1: In M30623(80-pin package), use the internal clock as transfer clock of UART2, because there is no external pin of CLK_2($P7_2$).

Note 2: In M30623(80-pin package), UART2 does not have these functions, because there is no external pin of $\overline{CTS_2}$/$\overline{RTS_2}$($P7_3$).

• Example of transmit timing when transfer data is 8 bits long (parity enabled, one stop bit)

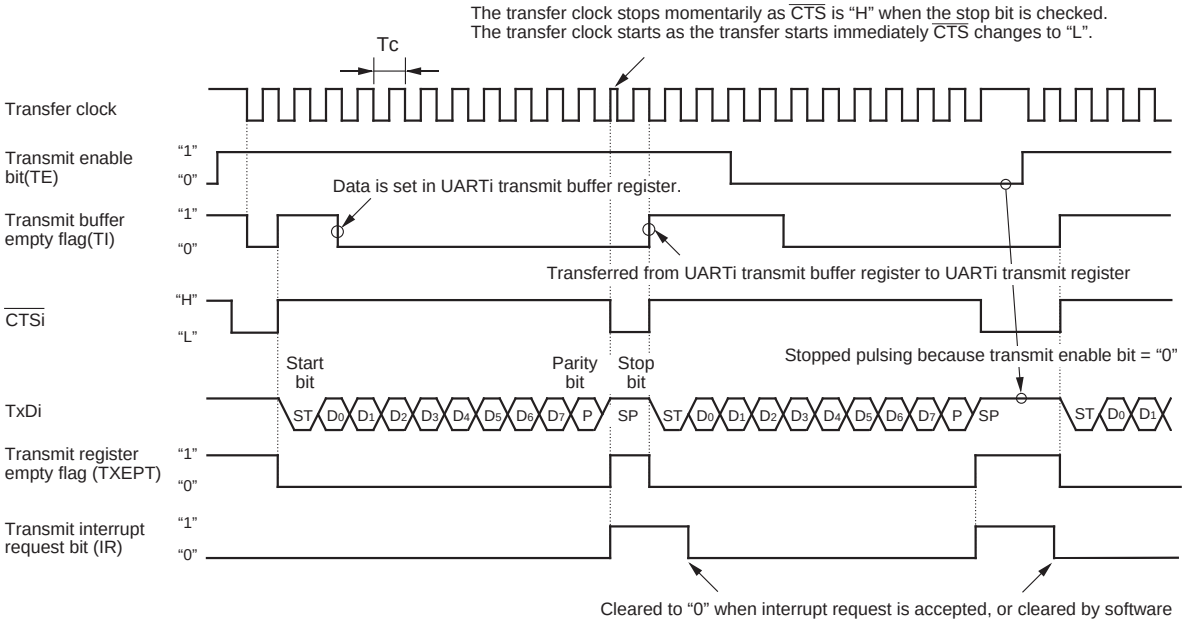

Shown in ( ) are bit symbols.

The above timing applies to the following settings :
- Parity is enabled.
- One stop bit.
- CTS function is selected.
- Transmit interrupt cause select bit = "1".

Tc = 16 (n + 1) / fi or 16 (n + 1) / f_{EXT}
fi : frequency of BRGi count source (f_1, f_8, f_{32})
f_{EXT} : frequency of BRGi count source (external clock)
n : value set to BRGi

Note 1: In M30623(80-pin package), there is no external pin of CTS2, so do not use the function using this pin.

• Example of transmit timing when transfer data is 9 bits long (parity disabled, two stop bits)

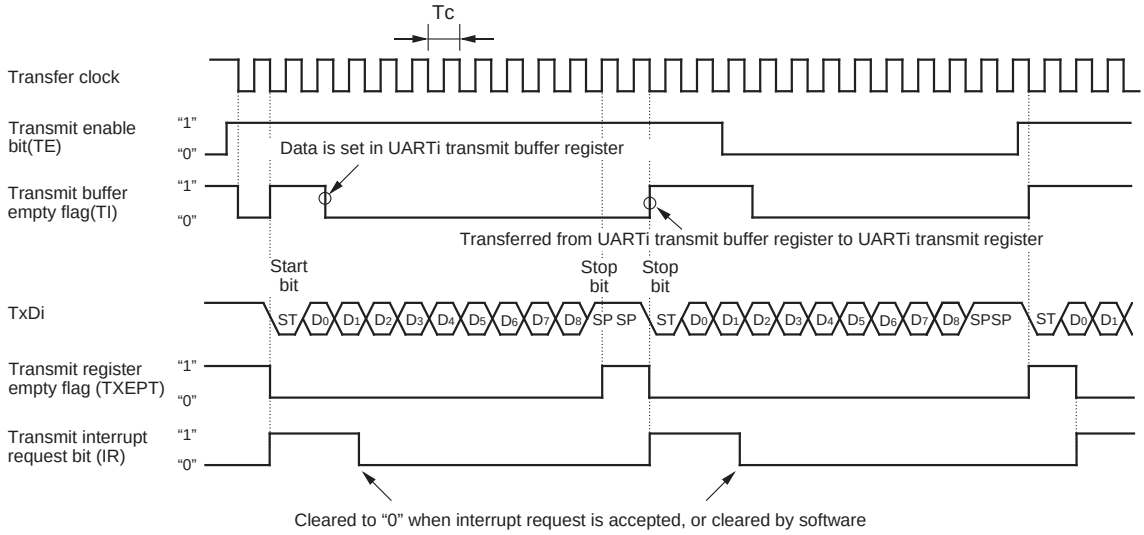

Shown in ( ) are bit symbols.

The above timing applies to the following settings :
- Parity is disabled.
- Two stop bits.
- CTS function is disabled.
- Transmit interrupt cause select bit = "0".

Tc = 16 (n + 1) / fi or 16 (n + 1) / f_{EXT}
fi : frequency of BRGi count source (f_1, f_8, f_{32})
f_{EXT} : frequency of BRGi count source (external clock)
n : value set to BRGi

Figure 1.19.16. Typical transmit timings in UART mode

• Example of receive timing when transfer data is 8 bits long (parity disabled, one stop bit)

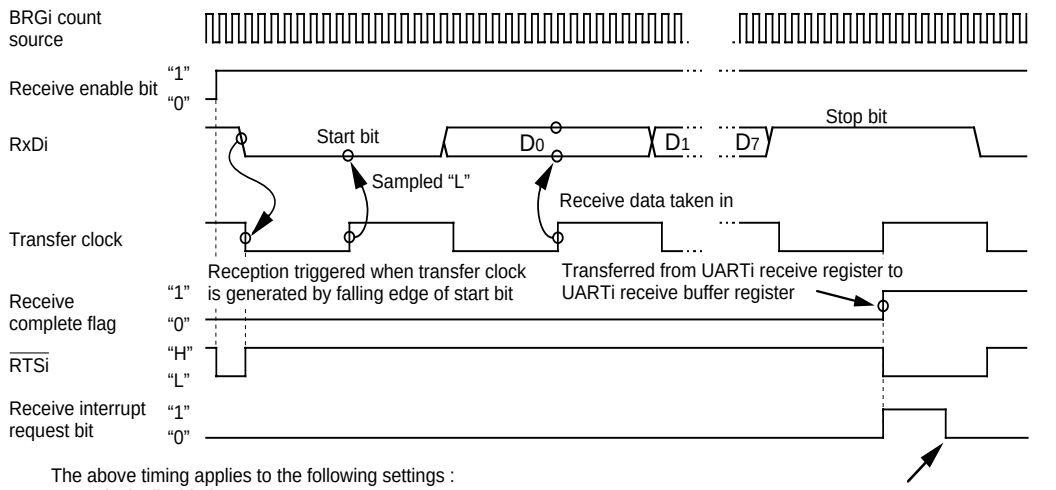

The above timing applies to the following settings :
- •Parity is disabled.
- •One stop bit.
- •$\overline{RTS}$ function is selected.

Note 1: In M30623(80-pin package), there is no external pin of $\overline{RTS}_2$, so do not use the function using this pin.

Figure 1.19.17. Typical receive timing in UART mode

(a) Separate $\overline{CTS}/\overline{RTS}$ pins function (UART0)

Setting the $\overline{CTS}/\overline{RTS}$ separate bit (bit 6 of address 03B0$_{16}$) to "1" inputs/outputs the $\overline{CTS}$ signal and $\overline{RTS}$ signal from different pins. Choose which to use, $\overline{CTS}$ or $\overline{RTS}$, by use of the $\overline{CTS}/\overline{RTS}$ function select bit (bit 2 of address 03A4$_{16}$). This function is effective in UART0 only. With this function chosen, the user cannot use the $\overline{CTS}/\overline{RTS}$ function. Set "0" both to the $\overline{CTS}/\overline{RTS}$ function select bit (bit 2 of address 03AC$_{16}$) and to the $\overline{CTS}/\overline{RTS}$ disable bit (bit 4 of address 03AC$_{16}$).

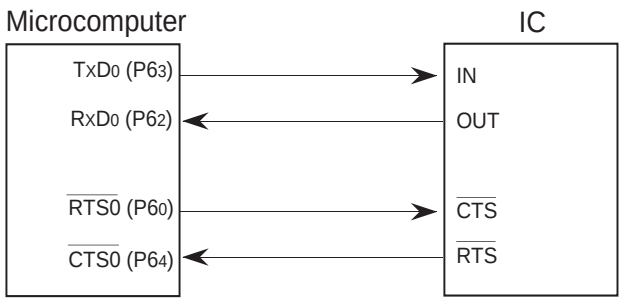

Note : The user cannot use $\overline{CTS}$ and $\overline{RTS}$ at the same time.

Figure 1.19.18. The separate $\overline{CTS}/\overline{RTS}$ pins function usage

(b) Sleep mode (UART0, UART1)

This mode is used to transfer data between specific microcomputers among multiple microcomputers connected using UARTi. The sleep mode is selected when the sleep select bit (bit 7 at addresses 03A0$_{16}$, 03A8$_{16}$) is set to "1" during reception. In this mode, the unit performs receive operation when the MSB of the received data = "1" and does not perform receive operation when the MSB = "0".

(c) Function for switching serial data logic (UART2)

When the data logic select bit (bit 6 of address 037D16) is assigned 1, data is inverted in writing to the transmission buffer register or reading the reception buffer register. Figure 1.19.19 shows the example of timing for switching serial data logic.

(d) TxD, RxD I/O polarity reverse function (UART2)

This function is to reverse TxD pin output and RxD pin input. The level of any data to be input or output (including the start bit, stop bit(s), and parity bit) is reversed. Set this function to “0” (not to reverse) for usual use. Figure 1.19.19 shows the example of timing for I/O polarity reverse.

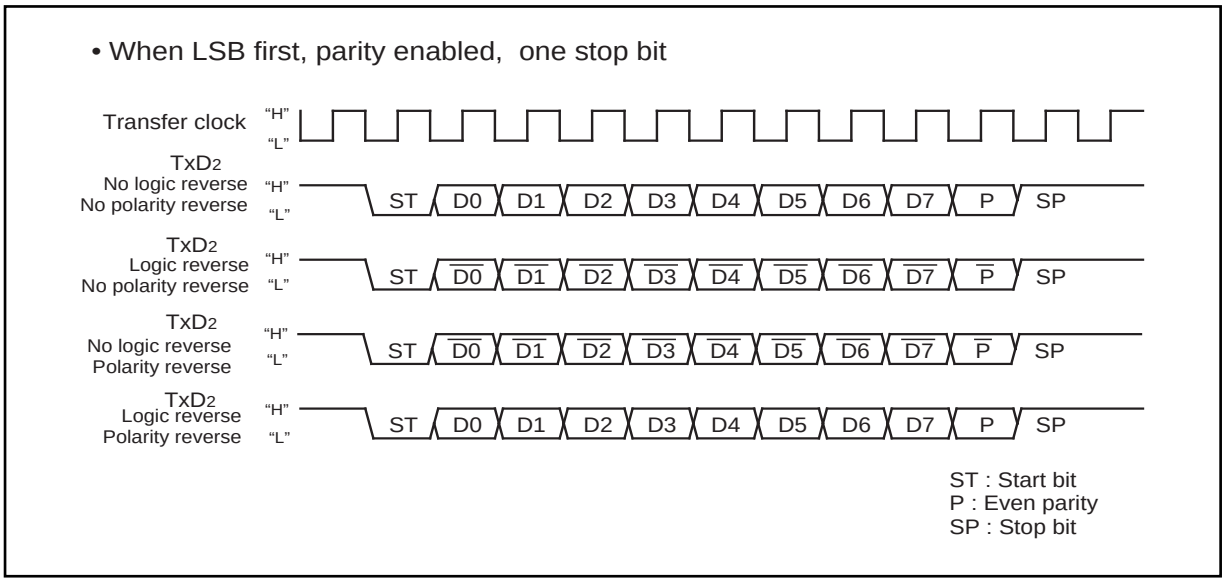

Figure 1.19.19. Timing for switching serial data logic, and I/O polarity reverse

(e) Bus collision detection function (UART2)

This function is to sample the output level of the TxD pin and the input level of the RxD pin at the rising edge of the transfer clock; if their values are different, then an interrupt request occurs. Figure 1.19.20 shows the example of detection timing of a buss collision (in UART mode).

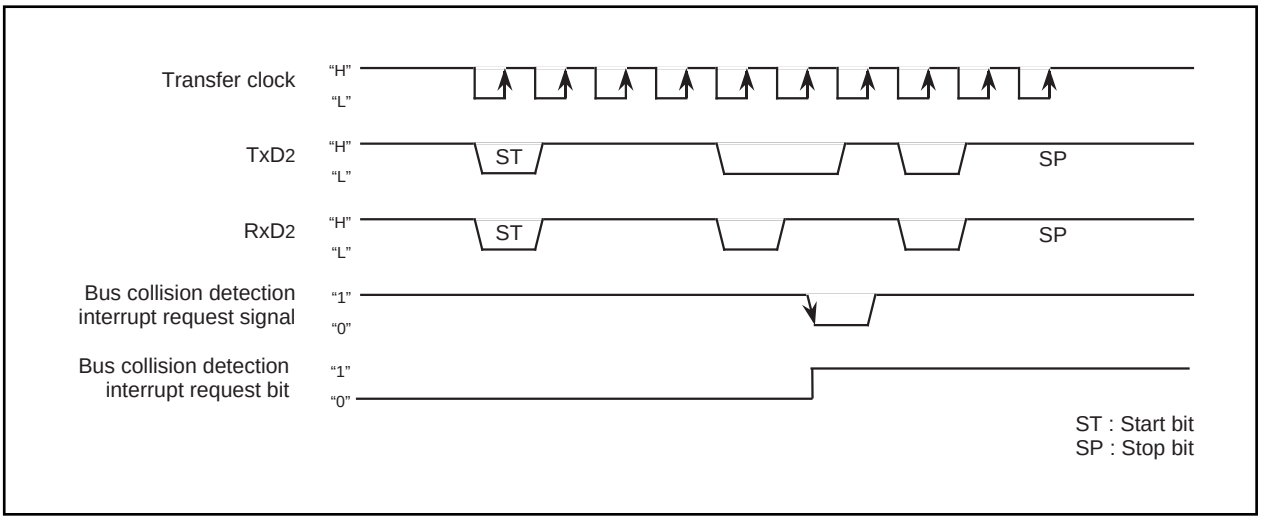

Figure 1.19.20. Detection timing of a bus collision (in UART mode)

(3) Clock-asynchronous serial I/O mode (compliant with the SIM interface)

The SIM interface is used for connecting the microcomputer with a memory card or the like; adding some extra settings in UART2 clock-asynchronous serial I/O mode allows the user to effect this function. Table 1.19.8 shows the specifications of clock-asynchronous serial I/O mode (compliant with the SIM interface).

Table 1.19.8. Specifications of clock-asynchronous serial I/O mode (compliant with the SIM interface)

Item	Specification
Transfer data format	• Transfer data 8-bit UART mode (bit 2 through bit 0 of address 0378_{16} = "101_2") • One stop bit (bit 4 of address 0378_{16} = "0") • With the direct format chosen Set parity to "even" (bit 5 and bit 6 of address 0378_{16} = "1" and "1" respectively) Set data logic to "direct" (bit 6 of address $037D_{16}$ = "0"). Set transfer format to LSB (bit 7 of address $037C_{16}$ = "0"). • With the inverse format chosen Set parity to "odd" (bit 5 and bit 6 of address 0378_{16} = "0" and "1" respectively) Set data logic to "inverse" (bit 6 of address $037D_{16}$ = "1") Set transfer format to MSB (bit 7 of address $037C_{16}$ = "1")
Transfer clock	• With the internal clock chosen (bit 3 of address 0378_{16} = "0") : fi / 16 (n + 1) (Note 1) : fi=f_1, f_8, f_{32} • With an external clock chosen (bit 3 of address 0378_{16} = "1") : f_{EXT} / 16 (n+1) (Note 1) (Note 2)
Transmission / reception control	• Disable the $\overline{CTS}$ and $\overline{RTS}$ function (bit 4 of address $037C_{16}$ = "1")
Other settings	• The sleep mode select function is not available for UART2 • Set transmission interrupt factor to "transmission completed" (bit 4 of address $037D_{16}$ = "1")
Transmission start condition	• To start transmission, the following requirements must be met: - Transmit enable bit (bit 0 of address $037D_{16}$) = "1" - Transmit buffer empty flag (bit 1 of address $037D_{16}$) = "0"
Reception start condition	• To start reception, the following requirements must be met: - Reception enable bit (bit 2 of address $037D_{16}$) = "1" - Detection of a start bit
Interrupt request generation timing	• When transmitting When data transmission from the UART2 transfer register is completed (bit 4 of address $037D_{16}$ = "1") • When receiving When data transfer from the UART2 receive register to the UART2 receive buffer register is completed
Error detection	• Overrun error (see the specifications of clock-asynchronous serial I/O) (Note 3) • Framing error (see the specifications of clock-asynchronous serial I/O) • Parity error (see the specifications of clock-asynchronous serial I/O) - On the reception side, an "L" level is output from the TxD_2 pin by use of the parity error signal output function (bit 7 of address $037D_{16}$ = "1") when a parity error is detected - On the transmission side, a parity error is detected by the level of input to the RxD_2 pin when a transmission interrupt occurs • The error sum flag (see the specifications of clock-asynchronous serial I/O)

Note 1: 'n' denotes the value 00_{16} to FF_{16} that is set to the UARTi bit rate generator.
Note 2: f_{EXT} is input from the CLK_2 pin. In M30623(80-pin package), do not select the external clock as transfer clock of UART2, because there is no external pin of CLK_2.
Note 3: If an overrun error occurs, the UART2 receive buffer will have the next data written in. Note also that the UARTi receive interrupt request bit is not set to "1".

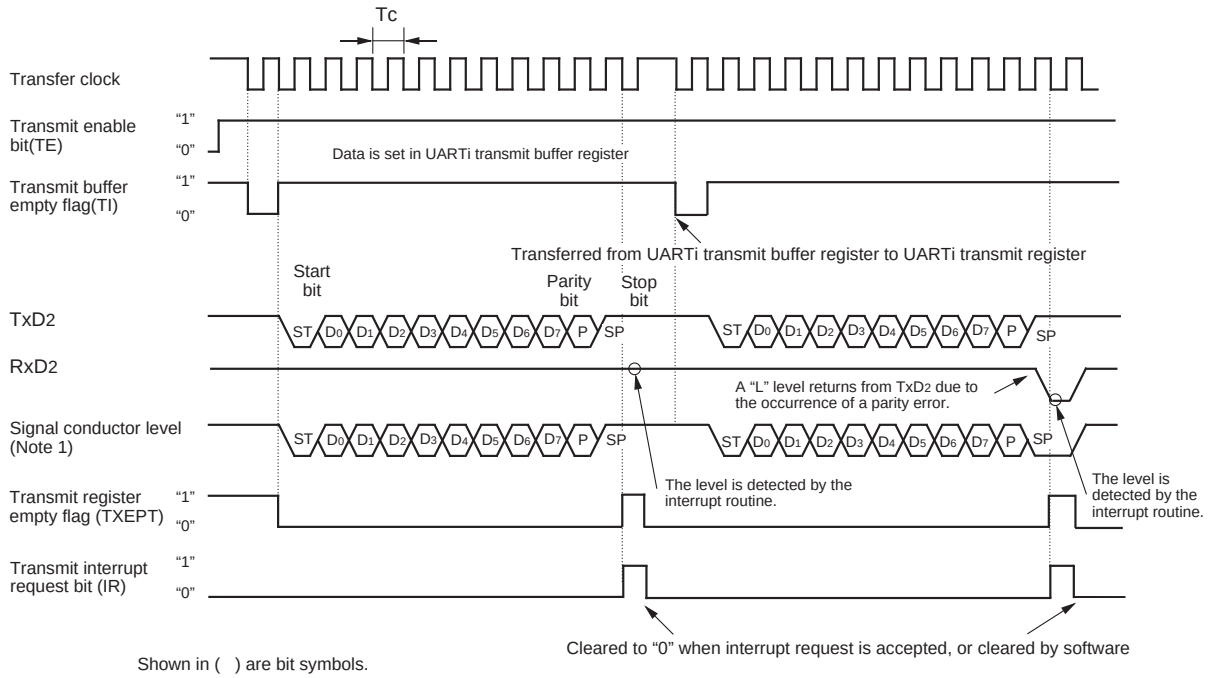

Shown in ( ) are bit symbols.

The above timing applies to the following settings :
- Parity is enabled.
- One stop bit.
- Transmit interrupt cause select bit = "1".

$Tc = 16 (n + 1) / fi$ or $16 (n + 1) / f_{EXT}$
fi : frequency of BRGi count source (f_1, f_8, f_{32})
f_{EXT} : frequency of BRGi count source (external clock)
n : value set to BRGi

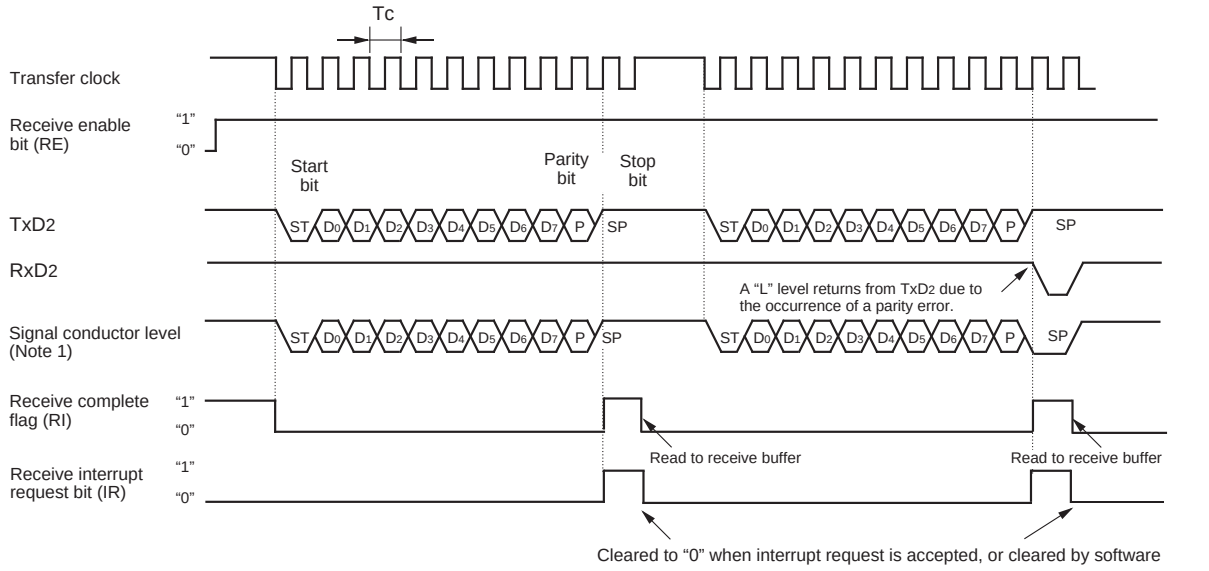

Shown in ( ) are bit symbols.

The above timing applies to the following settings :
- Parity is enabled.
- One stop bit.
- Transmit interrupt cause select bit = "0".

$Tc = 16 (n + 1) / fi$ or $16 (n + 1) / f_{EXT}$
fi : frequency of BRGi count source (f_1, f_8, f_{32})
f_{EXT} : frequency of BRGi count source (external clock)
n : value set to BRGi

Note: Equal in waveform because TxD_2 and RxD_2 are connected.

Figure 1.19.21. Typical transmit/receive timing in UART mode (compliant with the SIM interface)

(a) Function for outputting a parity error signal

With the error signal output enable bit (bit 7 of address 037D16) assigned “1”, you can output an “L” level from the TxD2 pin when a parity error is detected. In step with this function, the generation timing of a transmission completion interrupt changes to the detection timing of a parity error signal. Figure 1.19.22 shows the output timing of the parity error signal.

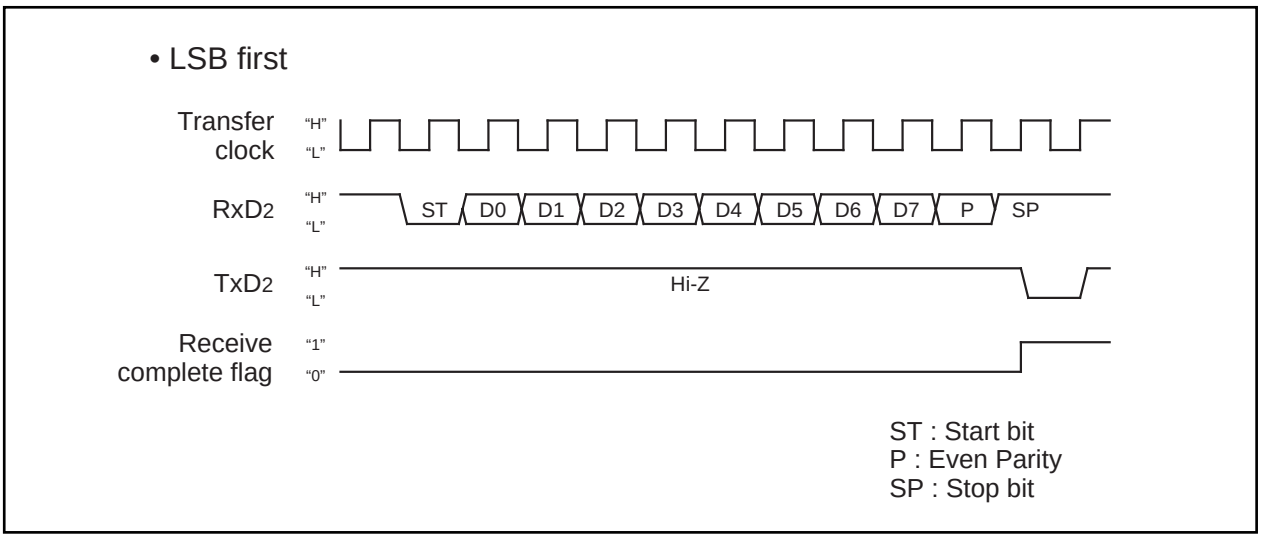

Figure 1.19.22. Output timing of the parity error signal

(b) Direct format/inverse format

Connecting the SIM card allows you to switch between direct format and inverse format. If you choose the direct format, D0 data is output from TxD2. If you choose the inverse format, D7 data is inverted and output from TxD2.

Figure 1.19.23 shows the SIM interface format.

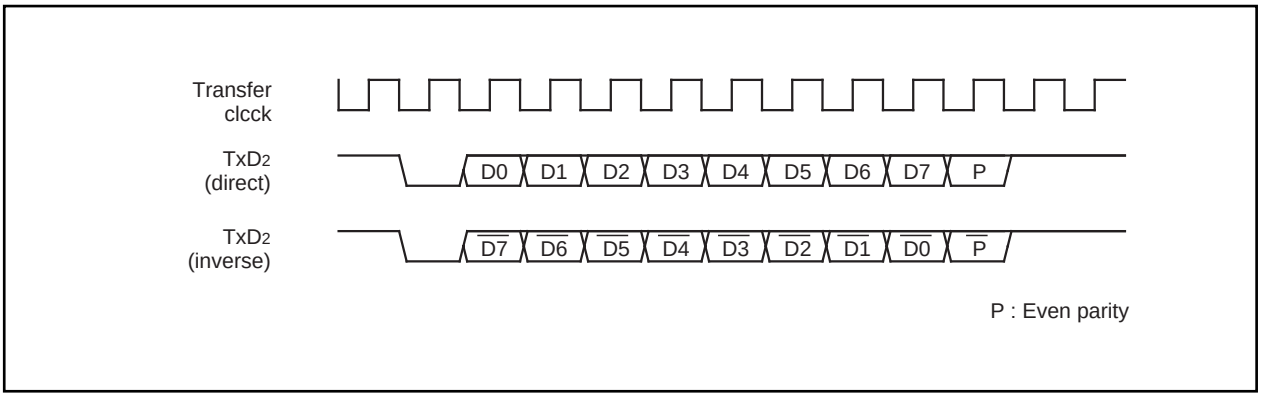

Figure 1.19.23. SIM interface format

Figure 1.19.24 shows the example of connecting the SIM interface. Connect TxD2 and RxD2 and apply pull-up.

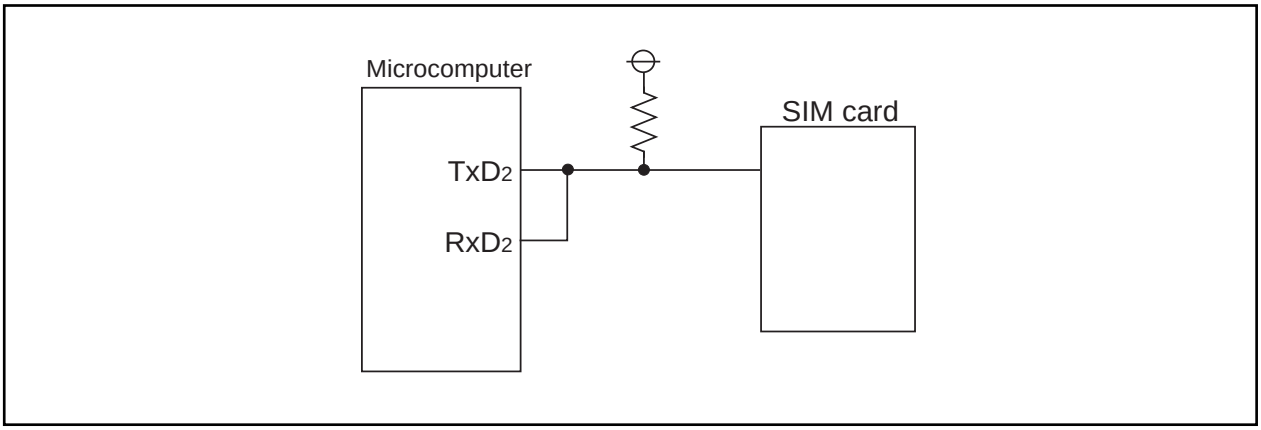

Figure 1.19.24. Connecting the SIM interface

UART2 Special Mode Register

The UART2 special mode register (address 0377_{16}) is used to control UART2 in various ways. Figure 1.19.25 shows the UART2 special mode register.

UART2 special mode register

b7	b6	b5	b4	b3	b2	b1	b0
X							

Symbol	Address	When reset
U2SMR	0377_{16}	00_{16}

Bit symbol	Bit name	Function (During clock synchronous serial I/O mode)	Function (During UART mode)	R	W
IICM	IIC mode selection bit	0 : Normal mode 1 : IIC mode	Must always be “0”	O	O
ABC	Arbitration lost detecting flag control bit	0 : Update per bit 1 : Update per byte	Must always be “0”	O	O
BBS	Bus busy flag	0 : STOP condition detected 1 : START condition detected	Must always be “0”	O	O (Note)
LSYN	SCLL sync output enable bit	0 : Disabled 1 : Enabled	Must always be “0”	O	O
ABSCS	Bus collision detect sampling clock select bit	Must always be “0”	0 : Rising edge of transfer clock 1 : Underflow signal of timer A0	O	O
ACSE	Auto clear function select bit of transmit enable bit	Must always be “0”	0 : No auto clear function 1 : Auto clear at occurrence of bus collision	O	O
SSS	Transmit start condition select bit	Must always be “0”	0 : Ordinary 1 : Falling edge of RxD2	O	O
	Nothing is assigned. In an attempt to write to this bit, write “0”. The value, if read, turns out to be “0”.			—	—

Note: Nothing but "0" may be written.

Figure 1.19.25. UART2 special mode register

Table 1.19.9. Features in IIC mode

	Function	Normal mode	IIC mode (Note 1)
1	Factor of interrupt number 10 (Note 2)	Bus collision detection	Start condition detection or stop condition detection
2	Factor of interrupt number 15 (Note 2)	UART2 transmission	No acknowledgment detection (NACK)
3	Factor of interrupt number 16 (Note 2)	UART2 reception	Acknowledgment detection (ACK)
4	UART2 transmission output delay	Not delayed	Delayed
5	$P7_0$ at the time when UART2 is in use	TxD_2 (output)	SDA (input/output) (Note 3)
6	$P7_1$ at the time when UART2 is in use	RxD_2 (input)	SCL (input/output)
7	$P7_2$ at the time when UART2 is in use (Note 4)	CLK_2	$P7_2$
8	DMA1 factor at the time when 1 1 0 1 is assigned to the DMA request factor selection bits	UART2 reception	Acknowledgment detection (ACK)
9	Noise filter width	15ns	50ns
10	Reading $P7_1$	Reading the terminal when 0 is assigned to the direction register	Reading the terminal regardless of the value of the direction register
11	Initial value of UART2 output	H level (when 0 is assigned to the CLK polarity select bit)	The value set in latch $P7_0$ when the port is selected

Note 1: Make the settings given below when IIC mode is in use.
Set 0 1 0 in bits 2, 1, 0 of the UART2 transmission/reception mode register.
Disable the RTS/CTS function. Choose the LSB First function.
Note 2: Follow the steps given below to switch from a factor to another.
1. Disable the interrupt of the corresponding number.
2. Switch from a factor to another.
3. Reset the interrupt request flag of the corresponding number.
4. Set an interrupt level of the corresponding number.
Note 3: Set an initial value of SDA transmission output when serial I/O is invalid.
Note 4: In M30623(80-pin package), $P7_2$ is not connected to external pin.

In the first place, the control bits related to the IIC bus(simplified IIC bus) interface are explained.
Bit 0 of the UART special mode register (037_{16}) is used as the IIC mode selection bit.
Setting “1” in the IIC mode select bit (bit 0) goes the circuit to achieve the IIC bus interface effective.
Table 1.19.9 shows the relation between the IIC mode select bit and respective control workings.
Since this function uses clock-synchronous serial I/O mode, set this bit to “0” in UART mode.

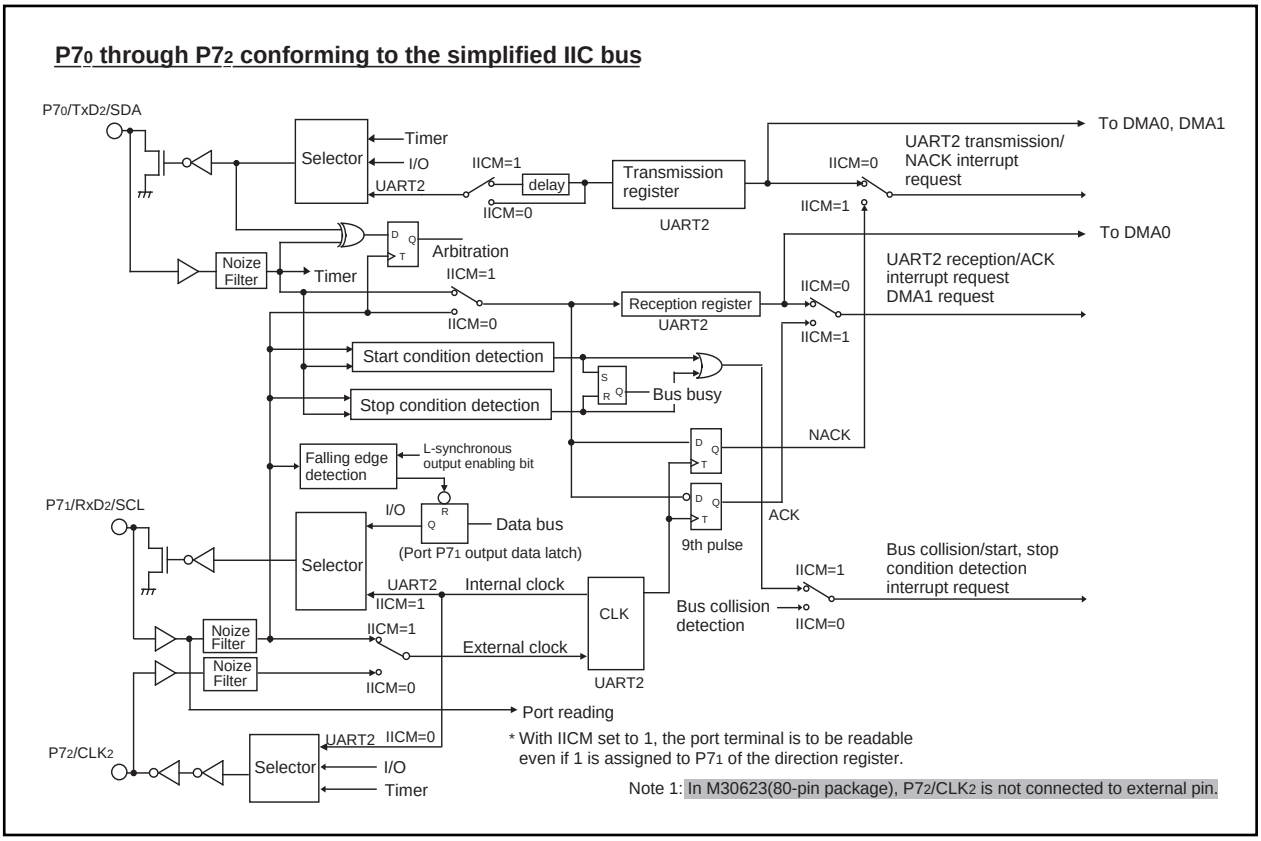

Figure 1.19.26. Functional block diagram for IIC mode

Figure 1.19.26 shows the functional block diagram for IIC mode. Setting “1” in the IIC mode selection bit (IICM) causes ports $P7_0$, $P7_1$, and $P7_2$ to work as data transmission-reception terminal SDA, clock input-output terminal SCL, and port $P7_2$ respectively. A delay circuit is added to the SDA transmission output, so the SDA output changes after SCL fully goes to “L”. An attempt to read Port $P7_1$ (SCL) results in getting the terminal’s level regardless of the content of the port direction register. The initial value of SDA transmission output in this mode goes to the value set in port $P7_0$. The interrupt factors of the bus collision detection interrupt, UART2 transmission interrupt, and of UART2 reception interrupt turn to the start/stop condition detection interrupt, acknowledgment non-detection interrupt, and acknowledgment detection interrupt respectively.
The start condition detection interrupt refers to the interrupt that occurs when the falling edge of the SDA terminal ($P7_0$) is detected with the SCL terminal ($P7_1$) staying “H”. The stop condition detection interrupt refers to the interrupt that occurs when the rising edge of the SDA terminal ($P7_0$) is detected with the SCL terminal ($P7_1$) staying “H”. The bus busy flag (bit 2 of the UART2 special mode register) is set to “1” by the start condition detection, and set to “0” by the stop condition detection.

The acknowledgment non-detection interrupt refers to the interrupt that occurs when the SDA terminal level is detected still staying “H” at the rising edge of the 9th transmission clock. The acknowledgment detection interrupt refers to the interrupt that occurs when SDA terminal’s level is detected already went to “L” at the 9th transmission clock. Also, assigning 1 1 0 1 (UART2 reception) to the DMA1 request factor select bits provides the means to start up the DMA transfer by the effect of acknowledgment detection.

Bit 1 of the UART2 special mode register (0377_{16}) is used as the arbitration loss detecting flag control bit. Arbitration means the act of detecting the nonconformity between transmission data and SDA terminal data at the timing of the SCL rising edge. This detecting flag is located at bit 3 of the UART2 reception buffer register ($037F_{16}$), and “1” is set in this flag when nonconformity is detected. Use the arbitration lost detecting flag control bit to choose which way to use to update the flag, bit by bit or byte by byte. When setting this bit to “1” and updated the flag byte by byte if nonconformity is detected, the arbitration lost detecting flag is set to “1” at the falling edge of the 9th transmission clock.

If update the flag byte by byte, must judge and clear (“0”) the arbitration lost detecting flag after completing the first byte acknowledge detect and before starting the next one byte transmission.

Bit 3 of the UART2 special mode register is used as SCL- and L-synchronous output enable bit. Setting this bit to “1” goes the $P7_1$ data register to “0” in synchronization with the SCL terminal level going to “L”.

Some other functions added are explained here. Figure 1.19.27 shows their workings.

Bit 4 of the UART2 special mode register is used as the bus collision detect sampling clock select bit. The bus collision detect interrupt occurs when the RxD2 level and TxD2 level do not match, but the nonconformity is detected in synchronization with the rising edge of the transfer clock signal if the bit is set to “0”. If this bit is set to “1”, the nonconformity is detected at the timing of the overflow of timer A0 rather than at the rising edge of the transfer clock.

Bit 5 of the UART2 special mode register is used as the auto clear function select bit of transmit enable bit. Setting this bit to “1” automatically resets the transmit enable bit to “0” when “1” is set in the bus collision detect interrupt request bit (nonconformity).

Bit 6 of the UART2 special mode register is used as the transmit start condition select bit. Setting this bit to “1” starts the TxD transmission in synchronization with the falling edge of the RxD terminal.

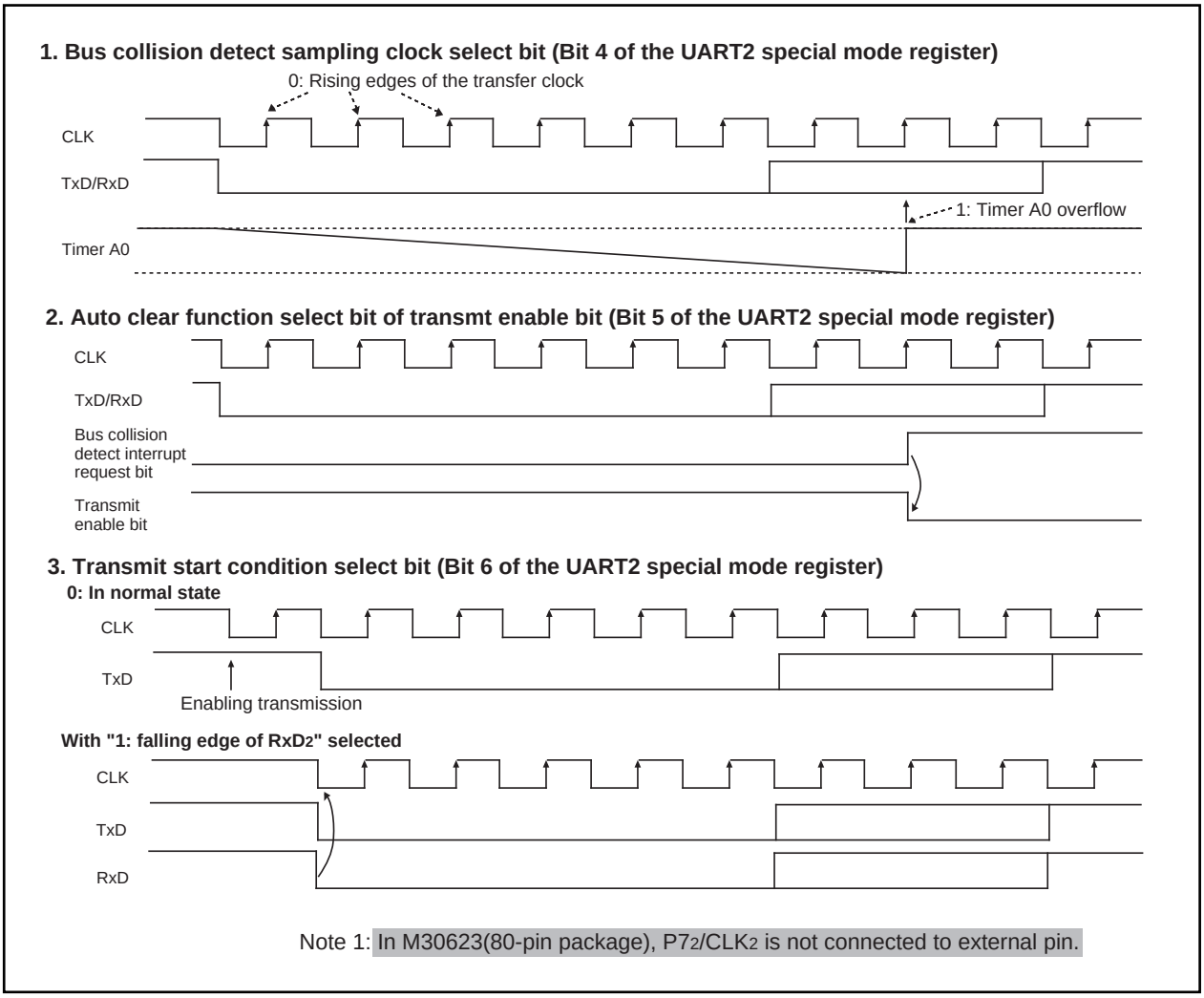

Figure 1.19.27. Some other functions added

S I/O3, 4

S I/O3 and S I/O4 are exclusive clock-synchronous serial I/Os.

In M30623(80-pin package), SIN3 is not connected to external pin, so S I/O3 is exclusive transmission.

Figure 1.19.28 shows the S I/O3, 4 block diagram, and Figure 1.19.29 shows the S I/O3, 4 control register.

Table 1.19.10 shows the specifications of S I/O3, 4.

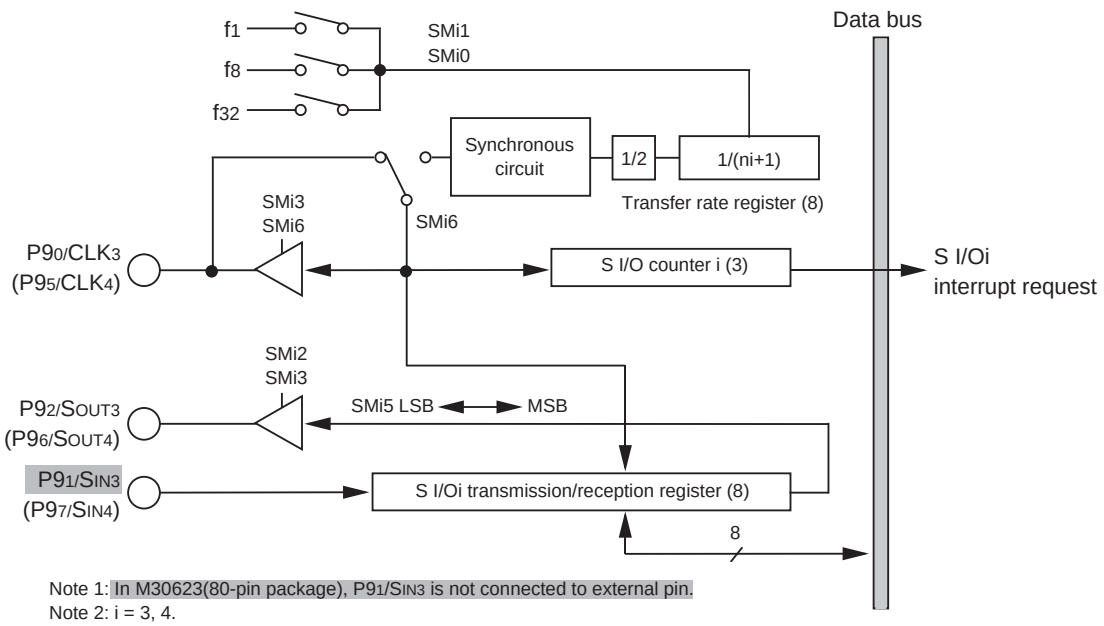

Note 1: In M30623(80-pin package), P91/SIN3 is not connected to external pin.
Note 2: i = 3, 4.
ni = A value set in the S I/O transfer rate register i (0363_{16}, 0367_{16}).

Figure 1.19.28. S I/O3, 4 block diagram

S I/Oi control register (i = 3, 4) (Note 1)

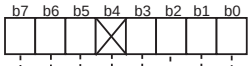

Symbol	Address	When reset
SiC	0362_{16}, 0366_{16}	40_{16}

Bit symbol	Bit name	Description	R	W
SMi0	Internal synchronous clock select bit	b1 b0 0 0 : Selecting f_1 0 1 : Selecting f_8 1 0 : Selecting f_{32} 1 1 : Not to be used	○	○
SMi1			○	○
SMi2	SOUTi high impedance control bit	0 : SOUTi output 1 : SOUTi high impedance	○	○
SMi3	S I/Oi port select bit (Note 2)	0 : Input-output port 1 : SOUTi output, CLK function	○	○
Nothing is assigned. In an attempt to write to this bit, write "0". The value, if read, turns out to be "0".			—	—
SMi5	Transfer direction lect bit	0 : LSB first 1 : MSB first	○	○
SMi6	Synchronous clock select bit (Note 2)	0 : External clock 1 : Internal clock	○	○
SMi7	SOUTi initial value set bit	Effective when SMi3 = 0 0 : L output 1 : H output	○	○

Note 1: Set "1" in bit 2 of the protection register ($000A_{16}$) in advance to write to the S I/Oi control register (i = 3, 4).
Note 2: When set "0" to SMi3 (i = 3, 4) and select input - output port, set "1" to SMi6 (i = 3, 4) and select internal clock, or input "H" to P90 and P95.

Figure 1.19.29. S I/O3, 4 control register

Table 1.19.10. Specifications of S I/O3, 4

Item	Specifications
Transfer data format	• Transfer data length: 8 bits
Transfer clock	• With the internal clock selected (bit 6 of 0362_{16}, 0366_{16} = "1"): f1/2(ni+1), f8/2(ni+1), f32/2(ni+1) (Note 1) • With the external clock selected (bit 6 of 0362_{16}, 0366_{16} = 0):Input from the CLKi terminal (Note 2)
Conditions for transmission/ reception start	• To start transmit/reception, the following requirements must be met: - Select the synchronous clock (use bit 6 of 036216, 036616). Select a frequency dividing ratio if the internal clock has been selected (use bits 0 and 1 of 0362_{16}, 0366_{16}). - SOUTi initial value set bit (use bit 7 of 0362_{16}, 0366_{16})= 1. - S I/Oi port select bit (bit 3 of 0362_{16}, 0366_{16}) = 1. - Select the transfer direction (use bit 5 of 0362_{16}, 0366_{16}) • To use S I/Oi interrupts, the following requirements must be met: - S I/Oi interrupt request bit (bit 3 of 0049_{16}, 0048_{16}) = 0.
Interrupt request generation timing	• An interrupt occurs after counting eight transfer clock either in transmitting or receiving data. (Note 3) - In transmitting: At the time data transfer from the S I/Oi transmission/reception register finishes. - In receiving: At the time data reception to the S I/Oi transmission/reception register finishes.
Select function	• LSB first or MSB first selection Whether transmission/reception begins with bit 0 or bit 7 can be selected.

Note 1: n is a value from 00_{16} through FF_{16} set in the S I/Oi transfer rate register (i = 3, 4).
Note 2: With the external clock selected:
- To write to the S I/Oi transmission/reception register (0360_{16}, 0364_{16}), enter the "H" level to the CLKi terminal. Also, to write to the bit 7 (SOUTi initial value set bit) of SI/Oi control register (0362_{16}, 0366_{16}), enter the "H" level to the CLKi terminal.
- The S I/Oi circuit keeps on with the shift operation as long as the synchronous clock is entered in it, so stop the synchronous clock at the instant when it counts to eight. The internal clock, if selected, automatically stops.

Note 3: If the internal clock is used for the synchronous clock, the transfer clock signal stops at the "H" state.
Note 4: In M30623(80-pin package), S I/O3 is exclusive transmission, because SIN3 is not connected to external pin.

SI/Oi bit rate generator

b7 b0

Symbol	Address	When reset
S3BRG	0363_{16}	Indeterminate
S4BRG	0367_{16}	Indeterminate

Indeterminate	Values that can be set	R	W
Assuming that set value = n, BRGi divides the count source by n + 1	00_{16} to FF_{16}		○

SI/Oi transmit/receive register

b7 b0

Symbol	Address	When reset
S3TRR	0360_{16}	Indeterminate
S4TRR	0364_{16}	Indeterminate

Indeterminate	R	W
Transmission/reception starts by writing data to this register. After transmission/reception finishes, reception data is input. (Note 1)	○	○

Note 1: In M30623(80-package), S I/O3 is exclusive transmission.

Figure 1.19.30. SI/Oi related register

■ Functions for setting an SOUTi initial value

In carrying out transmission, the output level of the SOUTi terminal as it is before transmitting 1-bit data can be set either to “H” or to “L”. Figure 1.19.31 shows the timing chart for setting an SOUTi initial value and how to set it.

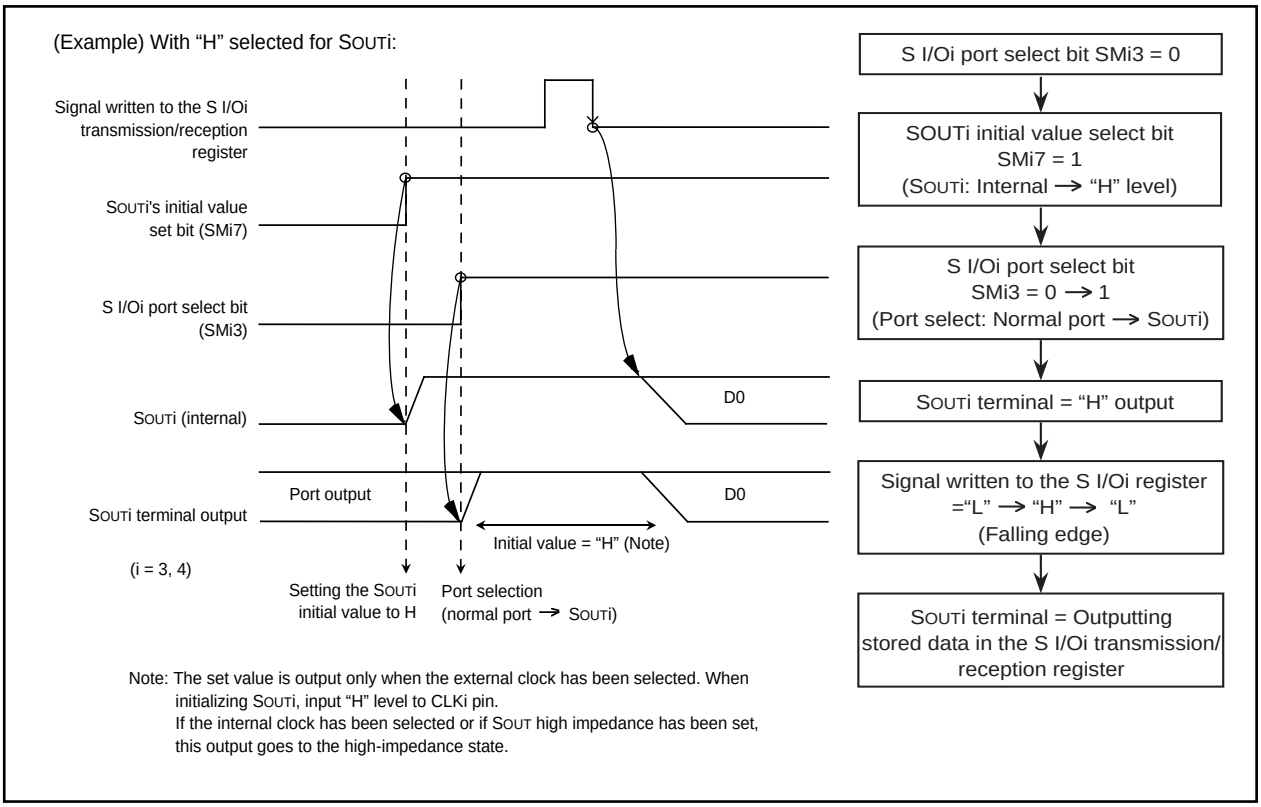

Figure 1.19.31. Timing chart for setting SOUTi’s initial value and how to set it

■ S I/Oi operation timing

Figure 1.19.32 shows the S I/Oi operation timing

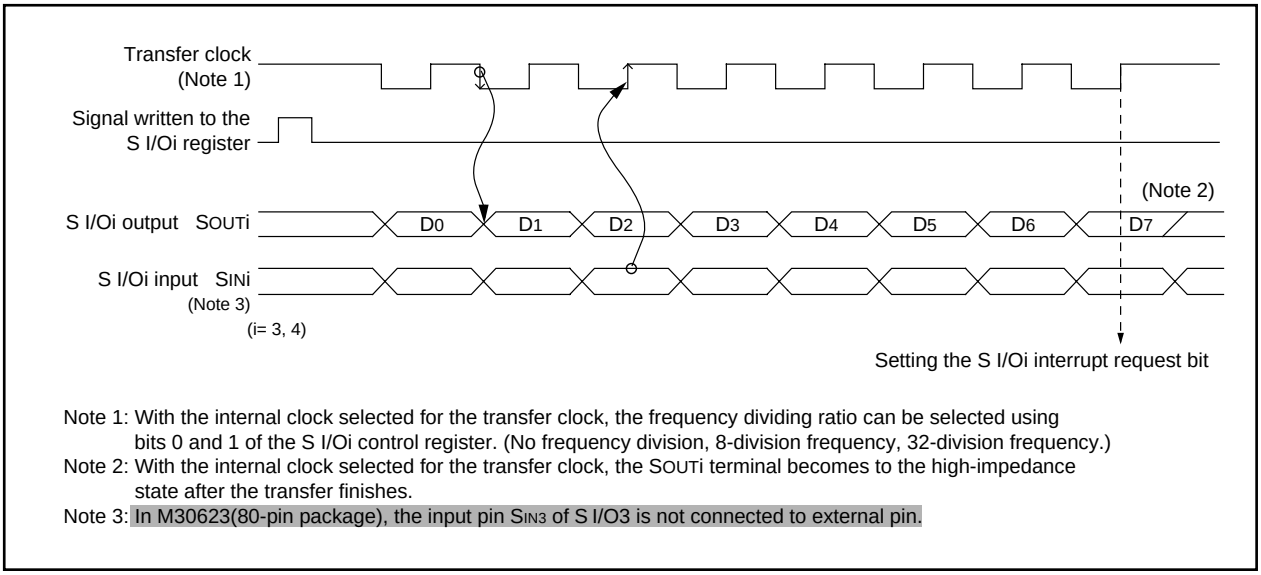

Figure 1.19.32. S I/Oi operation timing chart

A-D Converter

The A-D converter consists of one 10-bit successive approximation A-D converter circuit with a capacitive coupling amplifier. Pins $P10_0$ to $P10_7$, $P9_5$, $P9_6$, $P0_0$ to $P0_7$, and $P2_0$ to $P2_7$ also function as the analog signal input pins. The direction registers of these pins for A-D conversion must therefore be set to input. The Vref connect bit (bit 5 at address $03D7_{16}$) can be used to isolate the resistance ladder of the A-D converter from the reference voltage input pin (V_{REF}) when the A-D converter is not used. Doing so stops any current flowing into the resistance ladder from V_{REF}, reducing the power dissipation. When using the A-D converter, start A-D conversion only after setting bit 5 of $03D7_{16}$ to connect V_{REF}.

The result of A-D conversion is stored in the A-D registers of the selected pins. When set to 10-bit precision, the low 8 bits are stored in the even addresses and the high 2 bits in the odd addresses. When set to 8-bit precision, the low 8 bits are stored in the even addresses.

Table 1.20.1 shows the performance of the A-D converter. Figure 1.20.1 shows the block diagram of the A-D converter, and Figures 1.20.2 and 1.20.3 show the A-D converter-related registers.

Table 1.20.1. Performance of A-D converter

Item	Performance
Method of A-D conversion	Successive approximation (capacitive coupling amplifier)
Analog input voltage (Note 1)	0V to AV_{CC} (V_{CC})
Operating clock ϕ_{AD} (Note 2)	f_{AD}/divide-by-2 of f_{AD}/divide-by-4 of f_{AD}, f_{AD}=f(X_{IN}) (V_{CC} = 5V)
Resolution	8-bit or 10-bit (selectable)
Absolute precision	●8-bit resolution ±2LSB ●10-bit resolution ±3LSB When the extended analog input pins ANEX0, ANEX1, AN_{00} to AN_{07}, and AN_{20} to AN_{27} are used as the external operation amp connection mode: ±7LSB
Operating modes	One-shot mode, repeat mode, single sweep mode, repeat sweep mode 0, and repeat sweep mode 1
Analog input pins	8 pins (AN_0 to AN_7) + 2 pins (ANEX0 and ANEX1) + 16 pins (AN_{00} to AN_{07}, AN_{20} to AN_{27}) (Note 3)
A-D conversion start condition	• Software trigger A-D conversion starts when the A-D conversion start flag changes to “1” • External trigger (can be retriggered) A-D conversion starts when the A-D conversion start flag is “1” and the $\overline{ADTRG}$/$P9_7$ input changes from “H” to “L”
Conversion speed per pin	• Without sample and hold function 8-bit resolution: 49 ϕ_{AD} cycles, 10-bit resolution: 59 ϕ_{AD} cycles • With sample and hold function 8-bit resolution: 28 ϕ_{AD} cycles, 10-bit resolution: 33 ϕ_{AD} cycles

Note 1: Does not depend on use of sample and hold function.

Note 2: Divide the frequency if f(X_{IN}) exceeds 10MHz, and make ϕ_{AD} frequency equal to 10MHz.
Without sample and hold function, set the ϕ_{AD} frequency to 250kHz min.
With the sample and hold function, set the ϕ_{AD} frequency to 1MHz min.

Note 3: The pins are not used as the analog input pins can be used as normal I/O ports, or I/O pins of each peripheral function.

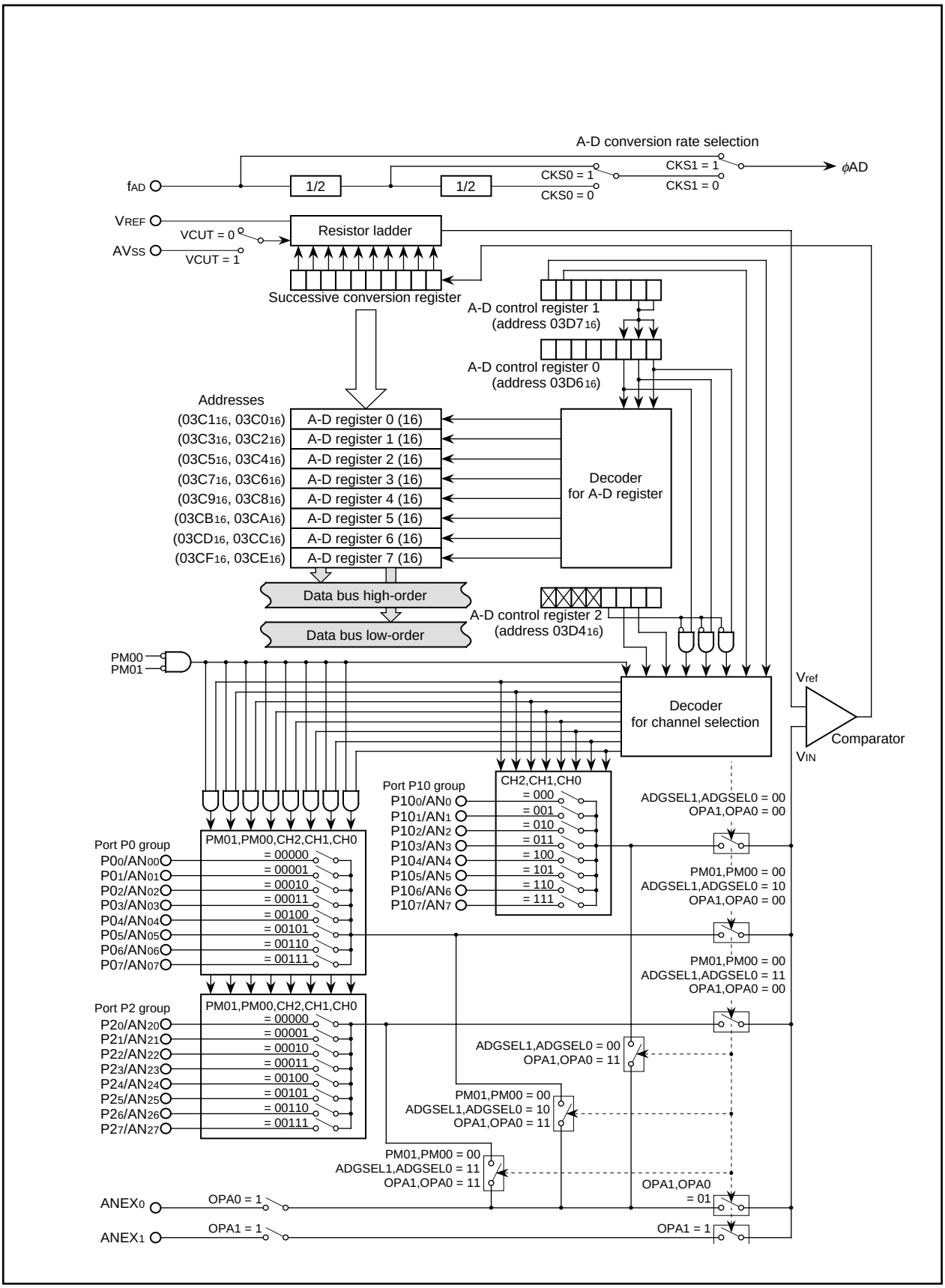

Figure 1.20.1. Block diagram of A-D converter

A-D control register 0 (Note 1)

b7	b6	b5	b4	b3	b2	b1	b0

Symbol	Address	When reset
ADCON0	$03D6_{16}$	$00000XXX_2$

Bit symbol	Bit name	Function	R	W
CH0	Analog input pin select bit	b2 b1 b0 0 0 0 : AN_0 is selected 0 0 1 : AN_1 is selected 0 1 0 : AN_2 is selected 0 1 1 : AN_3 is selected 1 0 0 : AN_4 is selected 1 0 1 : AN_5 is selected 1 1 0 : AN_6 is selected (Note 2) 1 1 1 : AN_7 is selected (Note 3)	○	○
CH1			○	○
CH2			○	○
MD0	A-D operation mode select bit 0	b4 b3 0 0 : One-shot mode 0 1 : Repeat mode 1 0 : Single sweep mode 1 1 : Repeat sweep mode 0 Repeat sweep mode 1 (Note 3)	○	○
MD1			○	○
TRG	Trigger select bit	0 : Software trigger 1 : $\overline{AD}_{TRG}$ trigger	○	○
ADST	A-D conversion start flag	0 : A-D conversion disabled 1 : A-D conversion started	○	○
CKS0	Frequency select bit 0	0 : $f_{AD}/4$ is selected 1 : $f_{AD}/2$ is selected	○	○

Note 1: If the A-D control register is rewritten during A-D conversion, the conversion result is indeterminate.
Note 2: AN_{00} to AN_{07}, and AN_{20} to AN_{27} can be used the same as AN_0 to AN_7.
Note 3: When changing A-D operation mode, set analog input pin again.

A-D control register 1 (Note 1)

b7	b6	b5	b4	b3	b2	b1	b0

Symbol	Address	When reset
ADCON1	$03D7_{16}$	00_{16}

Bit symbol	Bit name	Function	R	W
SCAN0	A-D sweep pin select bit	When single sweep and repeat sweep mode 0 are selected b1 b0 0 0 : AN_0, AN_1 (2 pins) 0 1 : AN_0 to AN_3 (4 pins) 1 0 : AN_0 to AN_5 (6 pins) 1 1 : AN_0 to AN_7 (8 pins) When repeat sweep mode 1 is selected b1 b0 0 0 : AN_0 (1 pin) 0 1 : AN_0, AN_1 (2 pins) 1 0 : AN_0 to AN_2 (3 pins) 1 1 : AN_0 to AN_3 (4 pins) (Note 3)	○	○
SCAN1			○	○
MD2	A-D operation mode select bit 1	0 : Any mode other than repeat sweep mode 1 1 : Repeat sweep mode 1	○	○
BITS	8/10-bit mode select bit	0 : 8-bit mode 1 : 10-bit mode	○	○
CKS1	Frequency select bit 1 (Note 2)	0 : $f_{AD}/2$ or $f_{AD}/4$ is selected 1 : f_{AD} is selected	○	○
VCUT	Vref connect bit	0 : Vref not connected 1 : Vref connected	○	○
OPA0	External op-amp connection mode bit	b7 b6 0 0 : ANEX0 and ANEX1 are not used 0 1 : ANEX0 input is A-D converted 1 0 : ANEX1 input is A-D converted 1 1 : External op-amp connection mode	○	○
OPA1			○	○

Note 1: If the A-D control register is rewritten during A-D conversion, the conversion result is indeterminate.
Note 2 : Divide the frequency if $f(X_{IN})$ exceeds 10MHz, and make ϕ_{AD} frequency equal to 10 MHz.
Note 3 : AN_{00} to AN_{07}, and AN_{20} to AN_{27} can be used the same as AN_0 to AN_7.

Figure 1.20.2. A-D converter-related registers (1)

A-D control register 2 (Note)

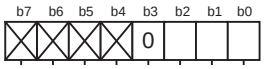

Symbol	Address	When reset
ADCON2	$03D4_{16}$	00_{16}

Bit symbol	Bit name	Function	R	W
SMP	A-D conversion method select bit	0 : Without sample and hold 1 : With sample and hold	○	○
ADGSEL0 ADGSEL1	Analog input group select bit	b2 b1 00 : Port10 group is selected 01 : Not use 10 : Port0 group is selected 11 : Port1 group is selected	○	○
Reserved bit		Always set to “0”	○	○
Nothing is assigned. In an attempt to write to these bits, write “0”. The value, if read, turns out to be “0”.			—	—

Note: If the A-D control register is rewritten during A-D conversion, the conversion result is indeterminate.

A-D register i

Symbol	Address	When reset
ADi(i=0 to 7)	$03C0_{16}$ to $03CF_{16}$	Indeterminate

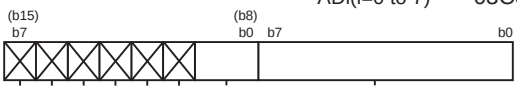

Function	R	W
Eight low-order bits of A-D conversion result	○	×
• During 10-bit mode Two high-order bits of A-D conversion result	○	×
• During 8-bit mode When read, the content is indeterminate	×	×
Nothing is assigned. In an attempt to write to these bits, write “0”. The value, if read, turns out to be “0”.	—	—

Figure 1.20.3. A-D converter-related registers (2)

(1) One-shot mode

In one-shot mode, the pin selected using the analog input pin select bit is used for one-shot A-D conversion. Table 1.20.2 shows the specifications of one-shot mode. Figure 1.20.4 shows the A-D control register in one-shot mode.

Table 1.20.2. One-shot mode specifications

Item	Specification
Function	The pin selected by the analog input pin select bit is used for one A-D conversion
Start condition	Writing “1” to A-D conversion start flag
Stop condition	• End of A-D conversion (A-D conversion start flag changes to “0”, except when external trigger is selected) • Writing “0” to A-D conversion start flag
Interrupt request generation timing	End of A-D conversion
Input pin	One of AN_0 to AN_7, as selected (Note 1)
Reading of result of A-D converter	Read A-D register corresponding to selected pin

Note 1: AN_{00} to AN_{07}, and AN_{20} to AN_{27} can be used the same as AN_0 to AN_7.

A-D control register 0 (Note 1)

b7	b6	b5	b4	b3	b2	b1	b0
			0	0			

Symbol	Address	When reset
ADCON0	$03D6_{16}$	$00000XXX_2$

Bit symbol	Bit name	Function	R	W
CH0	Analog input pin select bit	b2 b1 b0 0 0 0 : AN_0 is selected 0 0 1 : AN_1 is selected 0 1 0 : AN_2 is selected 0 1 1 : AN_3 is selected 1 0 0 : AN_4 is selected 1 0 1 : AN_5 is selected 1 1 0 : AN_6 is selected (Note 2) 1 1 1 : AN_7 is selected (Note 3)	○	○
CH1			○	○
CH2			○	○
MD0	A-D operation mode select bit 0	b4 b3 0 0 : One-shot mode (Note 3)	○	○
MD1			○	○
TRG	Trigger select bit	0 : Software trigger 1 : AD_{TRG} trigger	○	○
ADST	A-D conversion start flag	0 : A-D conversion disabled 1 : A-D conversion started	○	○
CKS0	Frequency select bit 0	0 : $f_{AD}/4$ is selected 1 : $f_{AD}/2$ is selected	○	○

Note 1: If the A-D control register is rewritten during A-D conversion, the conversion result is indeterminate.
Note 2: AN_{00} to AN_{07}, and AN_{20} to AN_{27} can be used the same as AN_0 to AN_7.
Note 3: When changing A-D operation mode, set analog input pin again.

A-D control register 1 (Note 1)

b7	b6	b5	b4	b3	b2	b1	b0
		1			0		

Symbol	Address	When reset
ADCON1	$03D7_{16}$	00_{16}

Bit symbol	Bit name	Function	R	W
SCAN0	A-D sweep pin select bit	Invalid in one-shot mode	○	○
SCAN1			○	○
MD2	A-D operation mode select bit 1	0 : Any mode other than repeat sweep mode 1	○	○
BITS	8/10-bit mode select bit	0 : 8-bit mode 1 : 10-bit mode	○	○
CKS1	Frequency select bit 1 (Note 2)	0 : $f_{AD}/2$ or $f_{AD}/4$ is selected 1 : f_{AD} is selected	○	○
VCUT	Vref connect bit	1 : Vref connected	○	○
OPA0	External op-amp connection mode bit	b7 b6 0 0 : ANEX0 and ANEX1 are not used 0 1 : ANEX0 input is A-D converted 1 0 : ANEX1 input is A-D converted 1 1 : External op-amp connection mode	○	○
OPA1			○	○

Note 1: If the A-D control register is rewritten during A-D conversion, the conversion result is indeterminate.
Note 2: Divide the frequency if $f(X_{IN})$ exceeds 10MHz, and make ϕ_{AD} frequency equal to 10MHz.

Figure 1.20.4. A-D conversion register in one-shot mode

(2) Repeat mode

In repeat mode, the pin selected using the analog input pin select bit is used for repeated A-D conversion. Table 1.20.3 shows the specifications of repeat mode. Figure 1.20.5 shows the A-D control register in repeat mode.

Table 1.20.3. Repeat mode specifications

Item	Specification
Function	The pin selected by the analog input pin select bit is used for repeated A-D conversion
Star condition	Writing “1” to A-D conversion start flag
Stop condition	Writing “0” to A-D conversion start flag
Interrupt request generation timing	None generated
Input pin	One of AN_0 to AN_7, as selected (Note 1)
Reading of result of A-D converter	Read A-D register corresponding to selected pin

Note 1: AN_{00} to AN_{07}, and AN_{20} to AN_{27} can be used the same as AN_0 to AN_7.

A-D control register 0 (Note 1)

b7	b6	b5	b4	b3	b2	b1	b0
			0	1			

Symbol	Address	When reset
ADCON0	$03D6_{16}$	$00000XXX_2$

Bit symbol	Bit name	Function	R	W
CH0	Analog input pin select bit	b2 b1 b0 0 0 0 : AN_0 is selected 0 0 1 : AN_1 is selected 0 1 0 : AN_2 is selected 0 1 1 : AN_3 is selected 1 0 0 : AN_4 is selected 1 0 1 : AN_5 is selected 1 1 0 : AN_6 is selected (Note 2) 1 1 1 : AN_7 is selected (Note 3)	O	O
CH1			O	O
CH2			O	O
MD0	A-D operation mode select bit 0	b4 b3 0 1 : Repeat mode (Note 3)	O	O
MD1			O	O
TRG	Trigger select bit	0 : Software trigger 1 : AD_{TRG} trigger	O	O
ADST	A-D conversion start flag	0 : A-D conversion disabled 1 : A-D conversion started	O	O
CKS0	Frequency select bit 0	0 : $f_{AD}/4$ is selected 1 : $f_{AD}/2$ is selected	O	O

Note 1: If the A-D control register is rewritten during A-D conversion, the conversion result is indeterminate.
Note 2: AN_{00} to AN_{07}, and AN_{20} to AN_{27} can be used the same as AN_0 to AN_7.
Note 3: When changing A-D operation mode, set analog input pin again.

A-D control register 1 (Note 1)

b7	b6	b5	b4	b3	b2	b1	b0
		1			0		

Symbol	Address	When reset
ADCON1	$03D7_{16}$	00_{16}

Bit symbol	Bit name	Function	R	W
SCAN0	A-D sweep pin select bit	Invalid in repeat mode	O	O
SCAN1			O	O
MD2	A-D operation mode select bit 1	0 : Any mode other than repeat sweep mode 1	O	O
BITS	8/10-bit mode select bit	0 : 8-bit mode 1 : 10-bit mode	O	O
CKS1	Frequency select bit 1 (Note 2)	0 : $f_{AD}/2$ or $f_{AD}/4$ is selected 1 : f_{AD} is selected	O	O
VCUT	Vref connect bit	1 : Vref connected	O	O
OPA0	External op-amp connection mode bit	b7 b6 0 0 : ANEX0 and ANEX1 are not used 0 1 : ANEX0 input is A-D converted 1 0 : ANEX1 input is A-D converted 1 1 : External op-amp connection mode	O	O
OPA1			O	O

Note 1: If the A-D control register is rewritten during A-D conversion, the conversion result is indeterminate.
Note 2: Divide the frequency if $f(X_{IN})$ exceeds 10MHz, and make ϕ_{AD} frequency equal to 10MHz.

Figure 1.20.5. A-D conversion register in repeat mode

(3) Single sweep mode

In single sweep mode, the pins selected using the A-D sweep pin select bit are used for one-by-one A-D conversion. Table 1.20.4 shows the specifications of single sweep mode. Figure 1.20.6 shows the A-D control register in single sweep mode.

Table 1.20.4. Single sweep mode specifications

Item	Specification
Function	The pins selected by the A-D sweep pin select bit are used for one-by-one A-D conversion
Start condition	Writing “1” to A-D converter start flag
Stop condition	• End of A-D conversion (A-D conversion start flag changes to “0”, except when external trigger is selected) • Writing “0” to A-D conversion start flag
Interrupt request generation timing	End of A-D conversion
Input pin	AN_0 and AN_1 (2 pins), AN_0 to AN_3 (4 pins), AN_0 to AN_5 (6 pins), or AN_0 to AN_7 (8 pins) (Note 1)
Reading of result of A-D converter	Read A-D register corresponding to selected pin

Note 1: AN_{00} to AN_{07}, and AN_{20} to AN_{27} can be used the same as AN_0 to AN_7.

A-D control register 0 (Note 1)

b7	b6	b5	b4	b3	b2	b1	b0
			1	0			

Symbol	Address	When reset
ADCON0	$03D6_{16}$	$00000XXX_2$

Bit symbol	Bit name	Function	R	W
CH0	Analog input pin select bit	Invalid in single sweep mode	○	○
CH1			○	○
CH2			○	○
MD0	A-D operation mode select bit 0	b4 b3 1 0 : Single sweep mode	○	○
MD1			○	○
TRG	Trigger select bit	0 : Software trigger 1 : $\overline{AD_{TRG}}$ trigger	○	○
ADST	A-D conversion start flag	0 : A-D conversion disabled 1 : A-D conversion started	○	○
CKS0	Frequency select bit 0	0 : $f_{AD}/4$ is selected 1 : $f_{AD}/2$ is selected	○	○

Note 1: If the A-D control register is rewritten during A-D conversion, the conversion result is indeterminate.

A-D control register 1 (Note 1)

b7	b6	b5	b4	b3	b2	b1	b0
		1			0		

Symbol	Address	When reset
ADCON1	$03D7_{16}$	00_{16}

Bit symbol	Bit name	Function	R	W
SCAN0	A-D sweep pin select bit	When single sweep and repeat sweep mode 0 are selected b1 b0 0 0 : AN_0, AN_1 (2 pins) 0 1 : AN_0 to AN_3 (4 pins) 1 0 : AN_0 to AN_5 (6 pins) 1 1 : AN_0 to AN_7 (8 pins) (Note 3)	○	○
SCAN1			○	○
MD2	A-D operation mode select bit 1	0 : Any mode other than repeat sweep mode 1	○	○
BITS	8/10-bit mode select bit	0 : 8-bit mode 1 : 10-bit mode	○	○
CKS1	Frequency select bit 1 (Note 2)	0 : $f_{AD}/2$ or $f_{AD}/4$ is selected 1 : f_{AD} is selected	○	○
VCUT	Vref connect bit	1 : Vref connected	○	○
OPA0	External op-amp connection mode bit (Note 4)	b7 b6 0 0 : ANEX0 and ANEX1 are not used 0 1 : ANEX0 input is A-D converted 1 0 : ANEX1 input is A-D converted 1 1 : External op-amp connection mode	○	○
OPA1			○	○

Note 1: If the A-D control register is rewritten during A-D conversion, the conversion result is indeterminate.
Note 2: Divide the frequency if $f(X_{IN})$ exceeds 10MHz, and make ϕ_{AD} frequency equal

Figure 1.20.6. A-D conversion register in single sweep mode

(4) Repeat sweep mode 0

In repeat sweep mode 0, the pins selected using the A-D sweep pin select bit are used for repeat sweep A-D conversion. Table 1.20.5 shows the specifications of repeat sweep mode 0. Figure 1.20.7 shows the A-D control register in repeat sweep mode 0.

Table 1.20.5. Repeat sweep mode 0 specifications

Item	Specification
Function	The pins selected by the A-D sweep pin select bit are used for repeat sweep A-D conversion
Start condition	Writing “1” to A-D conversion start flag
Stop condition	Writing “0” to A-D conversion start flag
Interrupt request generation timing	None generated
Input pin	AN_0 and AN_1 (2 pins), AN_0 to AN_3 (4 pins), AN_0 to AN_5 (6 pins), or AN_0 to AN_7 (8 pins) (Note 1)
Reading of result of A-D converter	Read A-D register corresponding to selected pin (at any time)

Note 1: AN_{00} to AN_{07}, and AN_{20} to AN_{27} can be used the same as AN_0 to AN_7.

A-D control register 0 (Note 1)

b7	b6	b5	b4	b3	b2	b1	b0
			1	1			

Symbol	Address	When reset
ADCON0	$03D6_{16}$	$00000XXX_2$

Bit symbol	Bit name	Function	R	W
CH0	Analog input pin select bit	Invalid in repeat sweep mode 0	O	O
CH1			O	O
CH2			O	O
MD0	A-D operation mode select bit 0	b4 b3 1 1 : Repeat sweep mode 0	O	O
MD1			O	O
TRG	Trigger select bit	0 : Software trigger 1 : AD_{TRG} trigger	O	O
ADST	A-D conversion start flag	0 : A-D conversion disabled 1 : A-D conversion started	O	O
CKS0	Frequency select bit 0	0 : $f_{AD}/4$ is selected 1 : $f_{AD}/2$ is selected	O	O

Note 1: If the A-D control register is rewritten during A-D conversion, the conversion result is indeterminate.

A-D control register 1 (Note 1)

b7	b6	b5	b4	b3	b2	b1	b0
		1			0		

Symbol	Address	When reset
ADCON1	$03D7_{16}$	00_{16}

Bit symbol	Bit name	Function	R	W
SCAN0	A-D sweep pin select bit	When single sweep and repeat sweep mode 0 are selected b1 b0 0 0 : AN_0, AN_1 (2 pins) 0 1 : AN_0 to AN_3 (4 pins) 1 0 : AN_0 to AN_5 (6 pins) 1 1 : AN_0 to AN_7 (8 pins) (Note 3)	O	O
SCAN1			O	O
MD2	A-D operation mode select bit 1	0 : Any mode other than repeat sweep mode 1	O	O
BITS	8/10-bit mode select bit	0 : 8-bit mode 1 : 10-bit mode	O	O
CKS1	Frequency select bit 1 (Note 2)	0 : $f_{AD}/2$ or $f_{AD}/4$ is selected 1 : f_{AD} is selected	O	O
VCUT	Vref connect bit	1 : Vref connected	O	O
OPA0	External op-amp connection mode bit (Note 4)	b7 b6 0 0 : ANEX0 and ANEX1 are not used 0 1 : ANEX0 input is A-D converted 1 0 : ANEX1 input is A-D converted 1 1 : External op-amp connection mode	O	O
OPA1			O	O

Note 1: If the A-D control register is rewritten during A-D conversion, the conversion result is indeterminate.
Note 2: Divide the frequency if f(X_{IN}) exceeds 10MHz, and make ϕ_{AD} frequency equal to 10MHz.
Note 3: AN_{00} to AN_{07}, and AN_{20} to AN_{27} can be used the same as AN_0 to AN_7.
Note 4: Neither “01” nor “10” can be selected with the external op-amp connection mode bit.

Figure 1.20.7. A-D conversion register in repeat sweep mode 0

(5) Repeat sweep mode 1

In repeat sweep mode 1, all pins are used for A-D conversion with emphasis on the pin or pins selected using the A-D sweep pin select bit. Table 1.20.6 shows the specifications of repeat sweep mode 1. Figure 1.20.8 shows the A-D control register in repeat sweep mode 1.

Table 1.20.6. Repeat sweep mode 1 specifications

Item	Specification
Function	All pins perform repeat sweep A-D conversion, with emphasis on the pin or pins selected by the A-D sweep pin select bit Example : AN_0 selected $AN_0 \rightarrow AN_1 \rightarrow AN_0 \rightarrow AN_2 \rightarrow AN_0 \rightarrow AN_3$, etc
Start condition	Writing “1” to A-D conversion start flag
Stop condition	Writing “0” to A-D conversion start flag
Interrupt request generation timing	None generated
Input pin	AN_0 (1 pin), AN_0 and AN_1 (2 pins), AN_0 to AN_2 (3 pins), AN_0 to AN_3 (4 pins) (Note1)
Reading of result of A-D converter	Read A-D register corresponding to selected pin (at any time)

Note 1: AN_{00} to AN_{07}, and AN_{20} to AN_{27} can be used the same as AN_0 to AN_7.

A-D control register 0 (Note 1)

b7	b6	b5	b4	b3	b2	b1	b0
			1	1			

Symbol	Address	When reset
ADCON0	$03D6_{16}$	$00000XXX_2$

Bit symbol	Bit name	Function	R	W
CH0	Analog input pin select bit	Invalid in repeat sweep mode 1	○	○
CH1			○	○
CH2			○	○
MD0	A-D operation mode select bit 0	b4 b3 1 1 : Repeat sweep mode 1	○	○
MD1			○	○
TRG	Trigger select bit	0 : Software trigger 1 : AD_{TRG} trigger	○	○
ADST	A-D conversion start flag	0 : A-D conversion disabled 1 : A-D conversion started	○	○
CKS0	Frequency select bit 0	0 : $f_{AD}/4$ is selected 1 : $f_{AD}/2$ is selected	○	○

Note 1: If the A-D control register is rewritten during A-D conversion, the conversion result is indeterminate.

A-D control register 1 (Note 1)

b7	b6	b5	b4	b3	b2	b1	b0
		1			1		

Symbol	Address	When reset
ADCON1	$03D7_{16}$	00_{16}

Bit symbol	Bit name	Function	R	W
SCAN0	A-D sweep pin select bit	When repeat sweep mode 1 is selected b1 b0 0 0 : AN_0 (1 pin) 0 1 : AN_0, AN_1 (2 pins) 1 0 : AN_0 to AN_2 (3 pins) 1 1 : AN_0 to AN_3 (4 pins) (Note 3)	○	○
SCAN1			○	○
MD2	A-D operation mode select bit 1	1 : Repeat sweep mode 1	○	○
BITS	8/10-bit mode select bit	0 : 8-bit mode 1 : 10-bit mode	○	○
CKS1	Frequency select bit 1 (Note 2)	0 : $f_{AD}/2$ or $f_{AD}/4$ is selected 1 : f_{AD} is selected	○	○
VCUT	Vref connect bit	1 : Vref connected	○	○
OPA0	External op-amp connection mode bit (Note 4)	b7 b6 0 0 : ANEX0 and ANEX1 are not used 0 1 : ANEX0 input is A-D converted 1 0 : ANEX1 input is A-D converted 1 1 : External op-amp connection mode	○	○
OPA1			○	○

Note 1: If the A-D control register is rewritten during A-D conversion, the conversion result is indeterminate.
Note 2: Divide the frequency if $f(X_{IN})$ exceeds 10MHz, and make ϕ_{AD} frequency equal to 10MHz.
Note 3: AN_{00} to AN_{07}, and AN_{20} to AN_{27} can be used the same as AN_0 to AN_7.
Note 4: Neither ‘01’ nor ‘10’ can be selected with the external op-amp connection mode bit.

Figure 1.20.8. A-D conversion register in repeat sweep mode 1

(a) Sample and hold

Sample and hold is selected by setting bit 0 of the A-D control register 2 (address $03D4_{16}$) to “1”. When sample and hold is selected, the rate of conversion of each pin increases. As a result, a 28 ϕ_{AD} cycle is achieved with 8-bit resolution and 33 ϕ_{AD} with 10-bit resolution. Sample and hold can be selected in all modes. However, in all modes, be sure to specify before starting A-D conversion whether sample and hold is to be used.

(b) Extended analog input pins

In one-shot mode and repeat mode, the input via the extended analog input pins ANEX0 and ANEX1 can also be converted from analog to digital.

When bit 6 of the A-D control register 1 (address $03D7_{16}$) is “1” and bit 7 is “0”, input via ANEX0 is converted from analog to digital. The result of conversion is stored in A-D register 0.

When bit 6 of the A-D control register 1 (address $03D7_{16}$) is “0” and bit 7 is “1”, input via ANEX1 is converted from analog to digital. The result of conversion is stored in A-D register 1.

Furthermore, the input via 16pins of the extended analog input pins AN_{00} to AN_{07}, AN_{20} to AN_{27} can be converted from analog to digital. These pins can be used the same as AN_0 to AN_7.

Use the A-D control register 2 (address $03D4_{16}$) bit 1 and bit 2 to select the pin group AN_0 to AN_7, AN_{00} to AN_{07}, AN_{20} to AN_{27}.

In the selected pin group, the pins is not used as the analog input pin, can be used as normal I/O ports, or I/O pins of each peripheral function.

(c) External operation amp connection mode

In this mode, multiple external analog inputs via the extended analog input pins, ANEX0 and ANEX1, can be amplified together by just one operation amp and used as the input for A-D conversion.

When bit 6 of the A-D control register 1 (address $03D7_{16}$) is “1” and bit 7 is “1”, input via AN_0 to AN_7(Note 1) is output from ANEX0. The input from ANEX1 is converted from analog to digital and the result stored in the corresponding A-D register. The speed of A-D conversion depends on the response of the external operation amp. Do not connect the ANEX0 and ANEX1 pins directly. Figure 1.20.9 is an example of how to connect the pins in external operation amp mode.

Note 1: AN_{00} to AN_{07}, AN_{20} to AN_{27} can be used the same as AN_0 to AN_7.

(d) Caution of using A-D converter

(1) Set the direction register of the following ports to input: the port corresponding to a pin to be used as an analog input pin and external trigger input pin($P9_7$).

(2) In using a key-input interrupt, none of 4 pins (AN_4 through AN_7) can be used as an A-D conversion port (if the A-D input voltage goes to ‘‘L’’ level, a key-input interrupt occurs).

(3) Insert the capacitor between AVcc and AVss, between V_{REF} and AVss, and between the analog input pin (AN_i) and AVss, to prevent a malfunction or program runaway, and to reduce conversion error, due to noise. Figure 1.20.10 is an example connection of each pin.

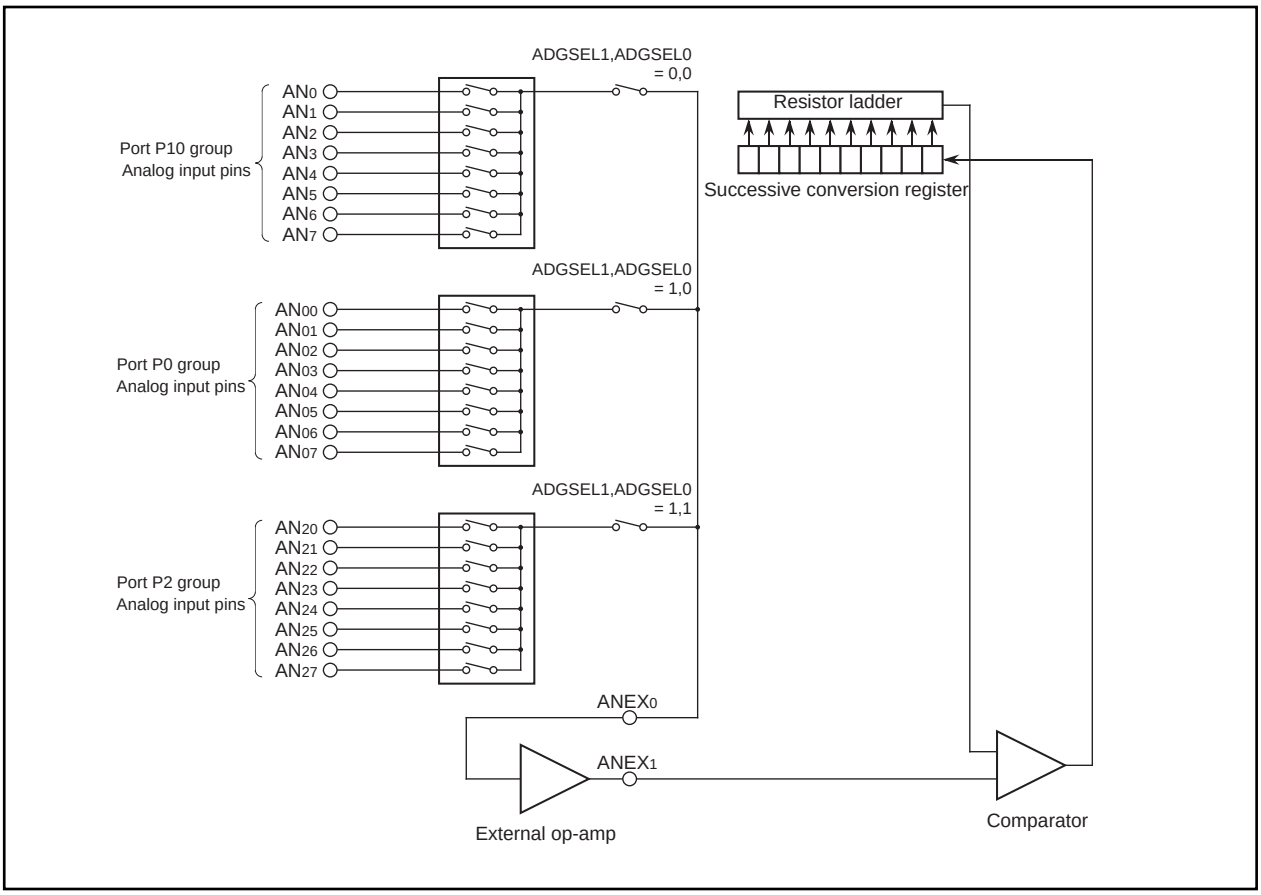

Figure 1.20.9. Example of external op-amp connection mode

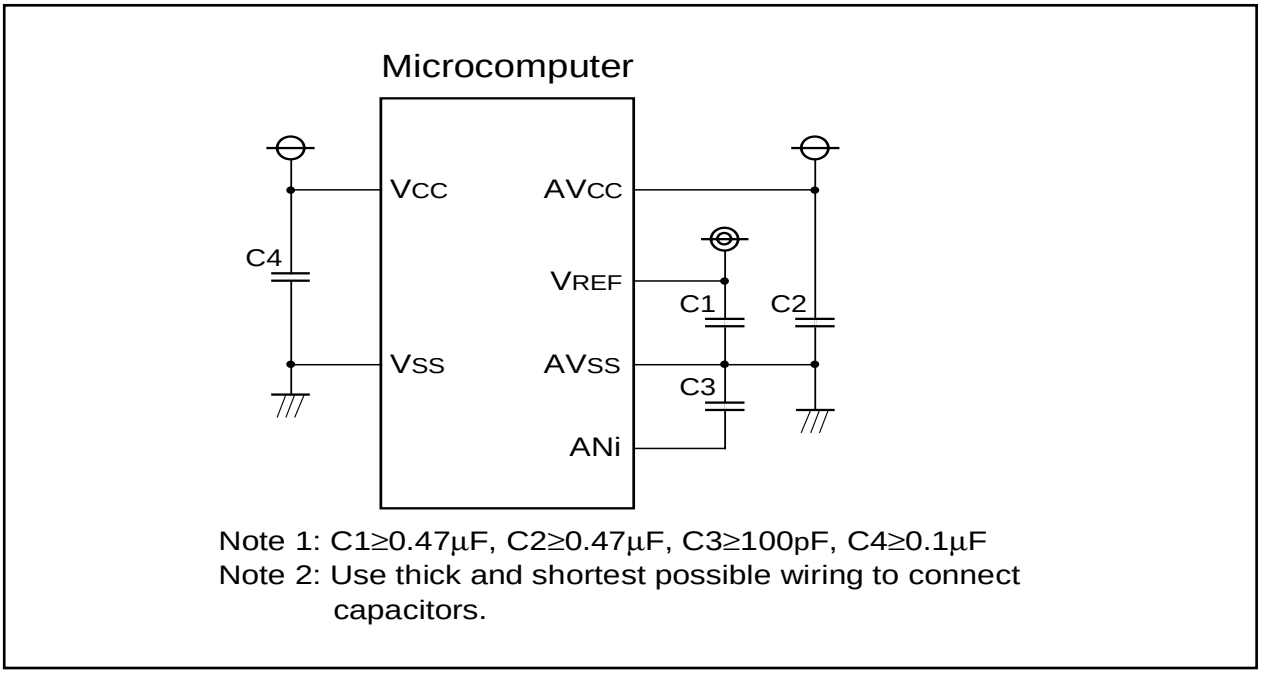

Figure 1.20.10. Example connection of VCC, VSS, AVCC, AVSS, VREF and ANi

D-A Converter

This is an 8-bit, R-2R type D-A converter. The microcomputer contains two independent D-A converters of this type.

D-A conversion is performed when a value is written to the corresponding D-A register. Bits 0 and 1 (D-A output enable bits) of the D-A control register decide if the result of conversion is to be output. Do not set the target port to output mode if D-A conversion is to be performed.

Output analog voltage (V) is determined by a set value (n : decimal) in the D-A register.

$$V = V_{REF} \times n / 256 \quad (n = 0 \text{ to } 255)$$

V_{REF} : reference voltage

Table 1.21.1 lists the performance of the D-A converter. Figure 1.21.1 shows the block diagram of the D-A converter. Figure 1.21.2 shows the D-A control register. Figure 1.21.3 shows the D-A converter equivalent circuit.

Table 1.21.1. Performance of D-A converter

Item	Performance
Conversion method	R-2R method
Resolution	8 bits
Analog output pin	2 channels

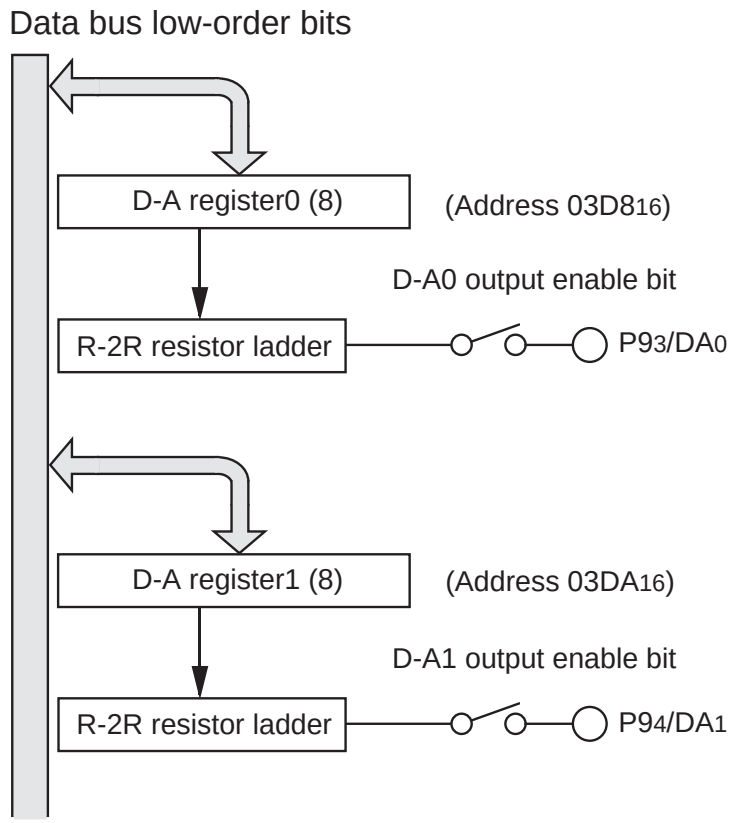

Figure 1.21.1. Block diagram of D-A converter

D-A control register

b7	b6	b5	b4	b3	b2	b1	b0

Symbol	Address	When reset
DACON	$03DC_{16}$	00_{16}

Bit symbol	Bit name	Function	R	W
DA0E	D-A0 output enable bit	0 : Output disabled 1 : Output enabled	○	○
DA1E	D-A1 output enable bit	0 : Output disabled 1 : Output enabled	○	○
Nothing is assigned. In an attempt to write to these bits, write “0”. The value, if read, turns out to be “0”			–	–

D-A register

b7	b0

Symbol	Address	When reset
DAi (i = 0,1)	$03D8_{16}$, $03DA_{16}$	Indeterminate

Function	R	W
Output value of D-A conversion	○	○

Figure 1.21.2. D-A control register

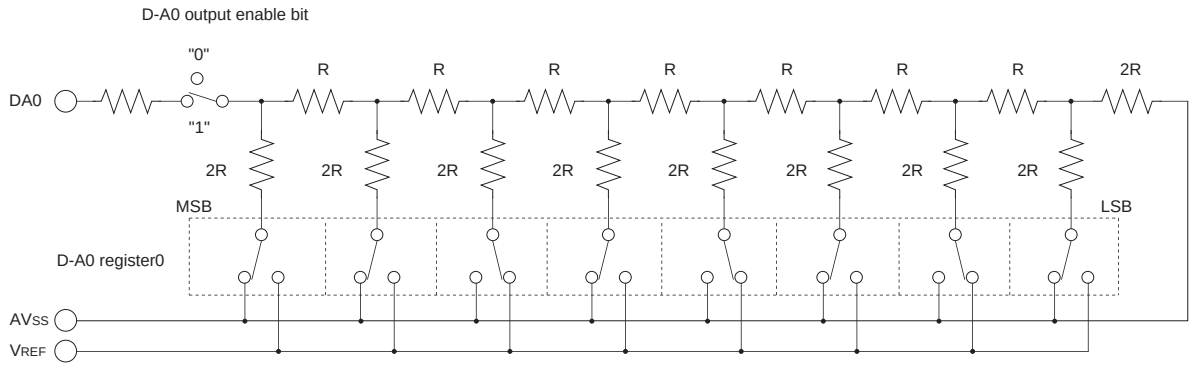

Note 1: The above diagram shows an instance in which the D-A register is assigned $2A_{16}$.
Note 2: The same circuit as this is also used for D-A1.
Note 3: To reduce the current consumption when the D-A converter is not used, set the D-A output enable bit to 0 and set the D-A register to 00_{16} so that no current flows in the resistors Rs and 2Rs.

Figure 1.21.3. D-A converter equivalent circuit

CRC Calculation Circuit

The Cyclic Redundancy Check (CRC) calculation circuit detects an error in data blocks. The microcomputer uses a generator polynomial of CRC_CCITT ($X^{16} + X^{12} + X^5 + 1$) to generate CRC code.

The CRC code is a 16-bit code generated for a block of a given data length in multiples of 8 bits. The CRC code is set in a CRC data register each time one byte of data is transferred to a CRC input register after writing an initial value into the CRC data register. Generation of CRC code for one byte of data is completed in two machine cycles.

Figure 1.22.1 shows the block diagram of the CRC circuit. Figure 1.22.2 shows the CRC-related registers. Figure 1.22.3 shows the calculation example using the CRC calculation circuit

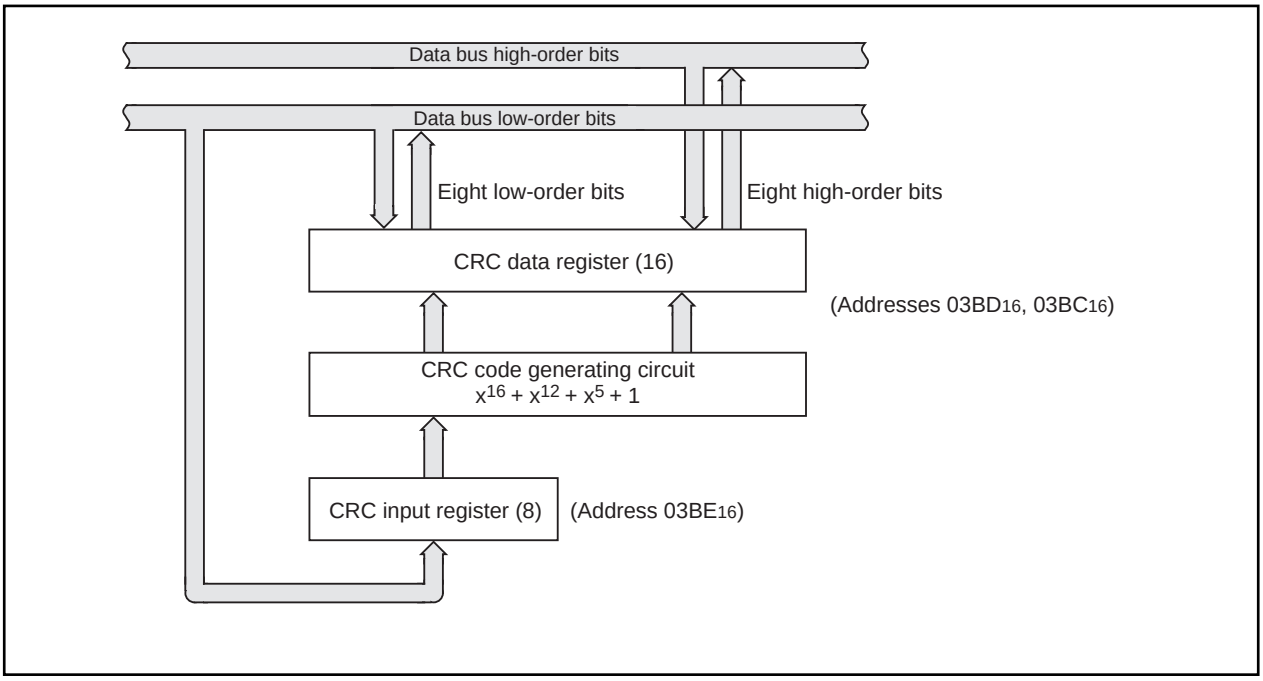

Figure 1.22.1. Block diagram of CRC circuit

CRC data register

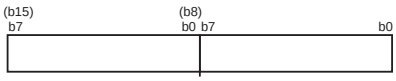

Symbol	Address	When reset
CRCD	03BD16, 03BC16	Indeterminate

Function	Values that can be set	R	W
CRC calculation result output register	0000₁₆ to FFFF₁₆	○	○

CRC input register

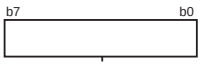

Symbo	Address	When reset
CRCIN	03BE16	Indeterminate

Function	Values that can be set	R	W
Data input register	00₁₆ to FF₁₆	○	○

Figure 1.22.2. CRC-related registers

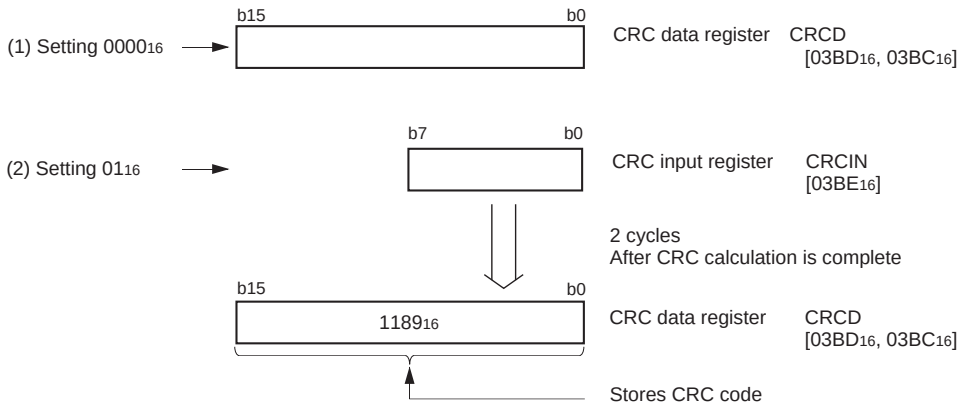

The code resulting from sending 01_{16} in LSB first mode is (1000 0000). Thus the CRC code in the generating polynomial, ($X^{16} + X^{12} + X^5 + 1$), becomes the remainder resulting from dividing (1000 0000) X^{16} by (1 0001 0000 0010 0001) in conformity with the modulo-2 operation.

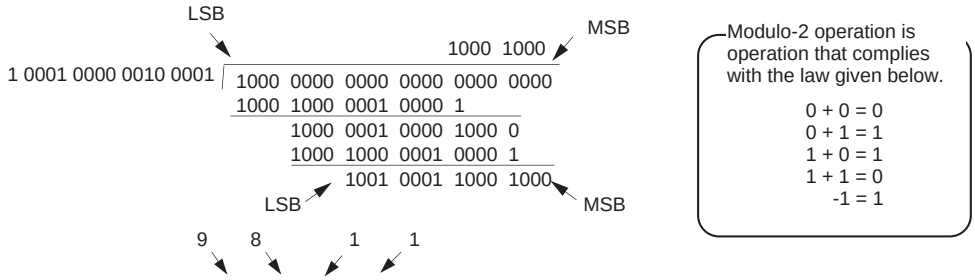

Thus the CRC code becomes (1001 0001 1000 1000). Since the operation is in LSB first mode, the (1001 0001 1000 1000) corresponds to 1189_{16} in hexadecimal notation. If the CRC operation in MSB first mode is necessary in the CRC operation circuit built in the M16C, switch between the LSB side and the MSB side of the input-holding bits, and carry out the CRC operation. Also switch between the MSB and LSB of the result as stored in CRC data.

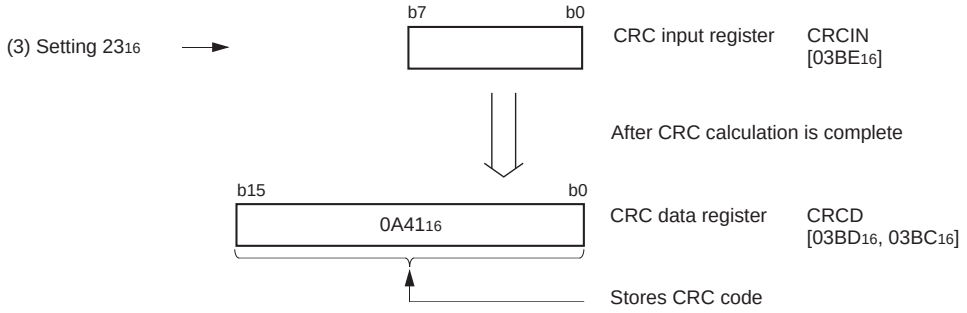

Figure 1.22.3. Calculation example using the CRC calculation circuit

Programmable I/O Ports

M30622(100-pin package) has 87 programmable I/O ports: P0 to P10 (excluding $P8_5$). M30623(80-pin package) has 70 (P1, $P4_4$ to $P4_7$, $P7_2$ to $P7_5$, $P9_1$ are not connected to external pin).

Each port can be set independently for input or output using the direction register. A pull-up resistance for each block of 4 ports can be set. $P8_5$ is an input-only port and has no built-in pull-up resistance.

Figures 1.23.1 to 1.23.3 show the programmable I/O ports. Figure 1.23.4 shows the I/O pins.

Each pin functions as a programmable I/O port and as the I/O for the built-in peripheral devices.

To use the pins as the inputs for the built-in peripheral devices, set the direction register of each pin to input mode. When the pins are used as the outputs for the built-in peripheral devices (other than the D-A converter), they function as outputs regardless of the contents of the direction registers. When pins are to be used as the outputs for the D-A converter, do not set the direction registers to output mode. See the descriptions of the respective functions for how to set up the built-in peripheral devices.

(1) Direction registers

Figure 1.23.5 shows the direction registers.

These registers are used to choose the direction of the programmable I/O ports. Each bit in these registers corresponds one for one to each I/O pin.

Note: There is no direction register bit for $P8_5$.

(2) Port registers

Figure 1.23.6 shows the port registers.

These registers are used to write and read data for input and output to and from an external device. A port register consists of a port latch to hold output data and a circuit to read the status of a pin. Each bit in port registers corresponds one for one to each I/O pin.

(3) Pull-up control registers

Figure 1.23.7 shows the pull-up control registers.

The pull-up control register can be set to apply a pull-up resistance to each block of 4 ports. When ports are set to have a pull-up resistance, the pull-up resistance is connected only when the direction register is set for input.

However, in memory expansion mode and microprocessor mode, P0 to P5 operate as the bus and the pull-up control register setting is invalid.

(4) Port control register

Figure 1.23.8 shows the port control register.

The bit 0 of port control resister is used to read port P1 as follows:

0 : When port P1 is input port, port input level is read.
When port P1 is output port , the contents of port P1 register is read.

1 : The contents of port P1 register is read always.

This register is valid in the following:

- External bus width is 8 bits in microprocessor mode or memory expansion mode.
- Port P1 can be used as a port in multiplexed bus for the entire space.

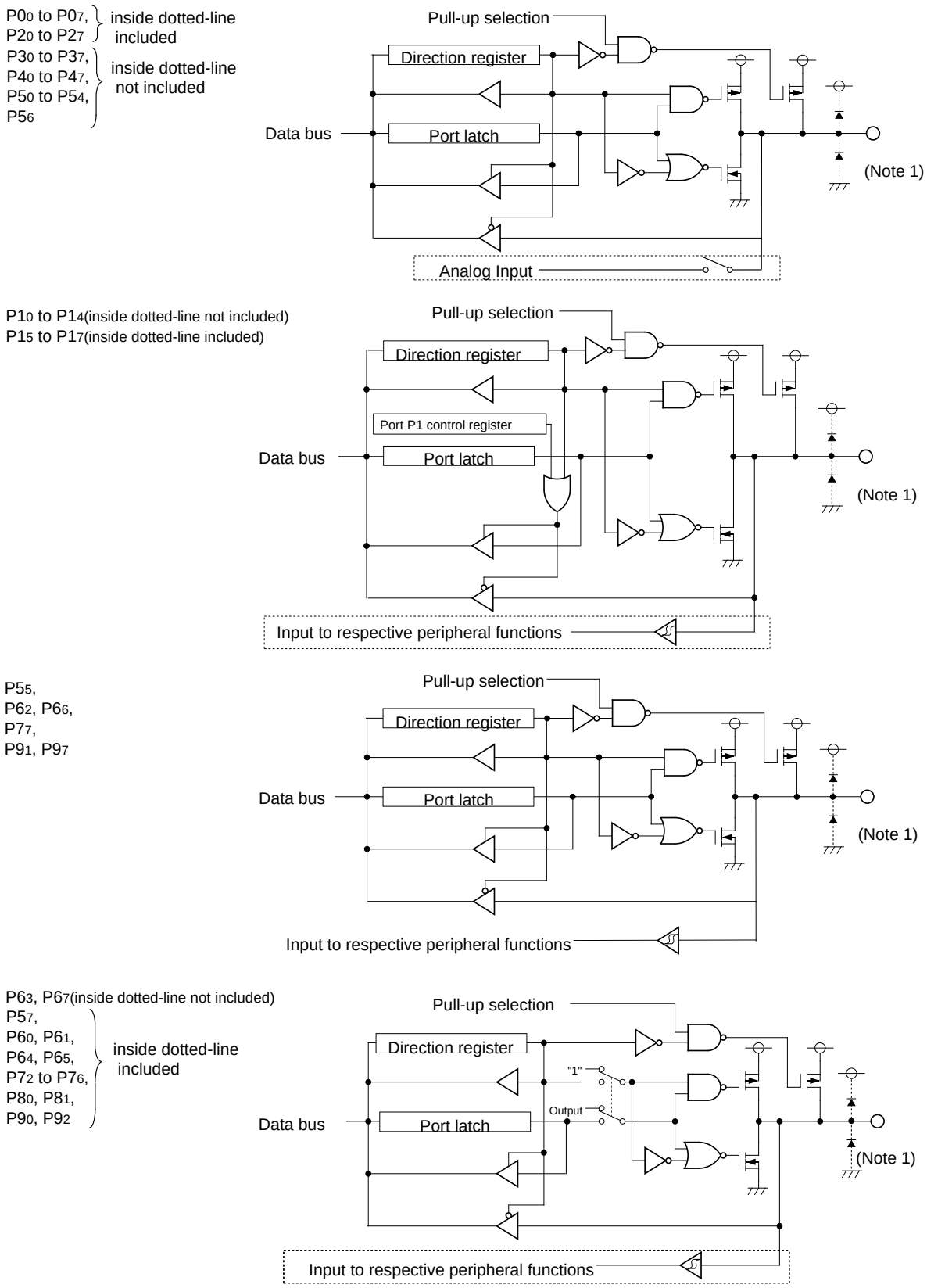

Note 1: symbolizes a parasitic diode.
Do not apply a voltage higher than Vcc to each port.
Note 2: In M30623(80-pin package), P10 to P17, P44 to P47, P72 to P75, and P91 are not connected to external pin.

Figure 1.23.1. Programmable I/O ports (1)

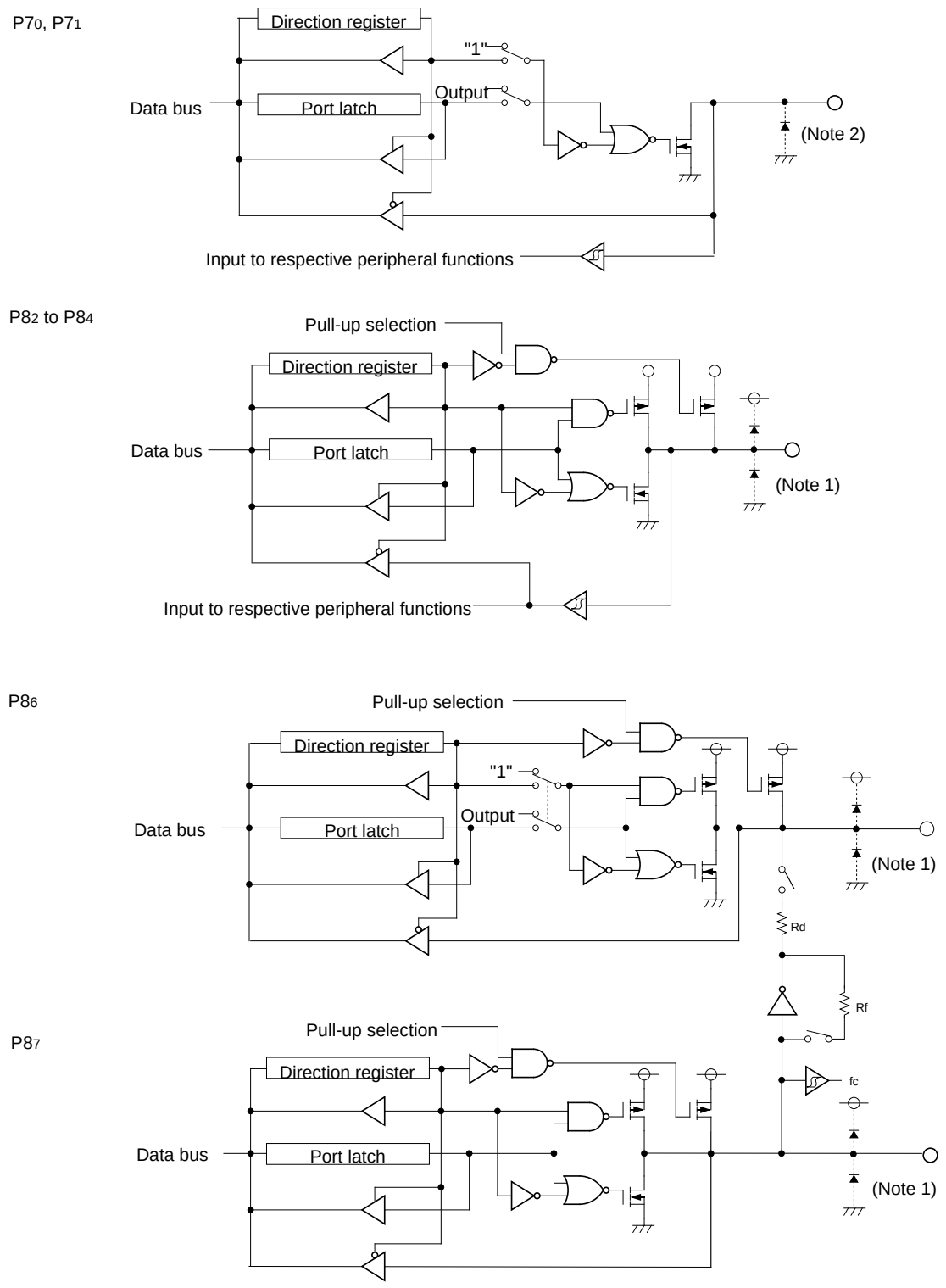

Note 1: symbolizes a parasitic diode.
Do not apply a voltage higher than Vcc to each port.
Note 2: symbolizes a parasitic diode.
Note 3: In M30623(80-pin package), P10 to P17, P44 to P47, P72 to P75, and P91 are not connected to external pin.

Figure 1.23.2. Programmable I/O ports (2)

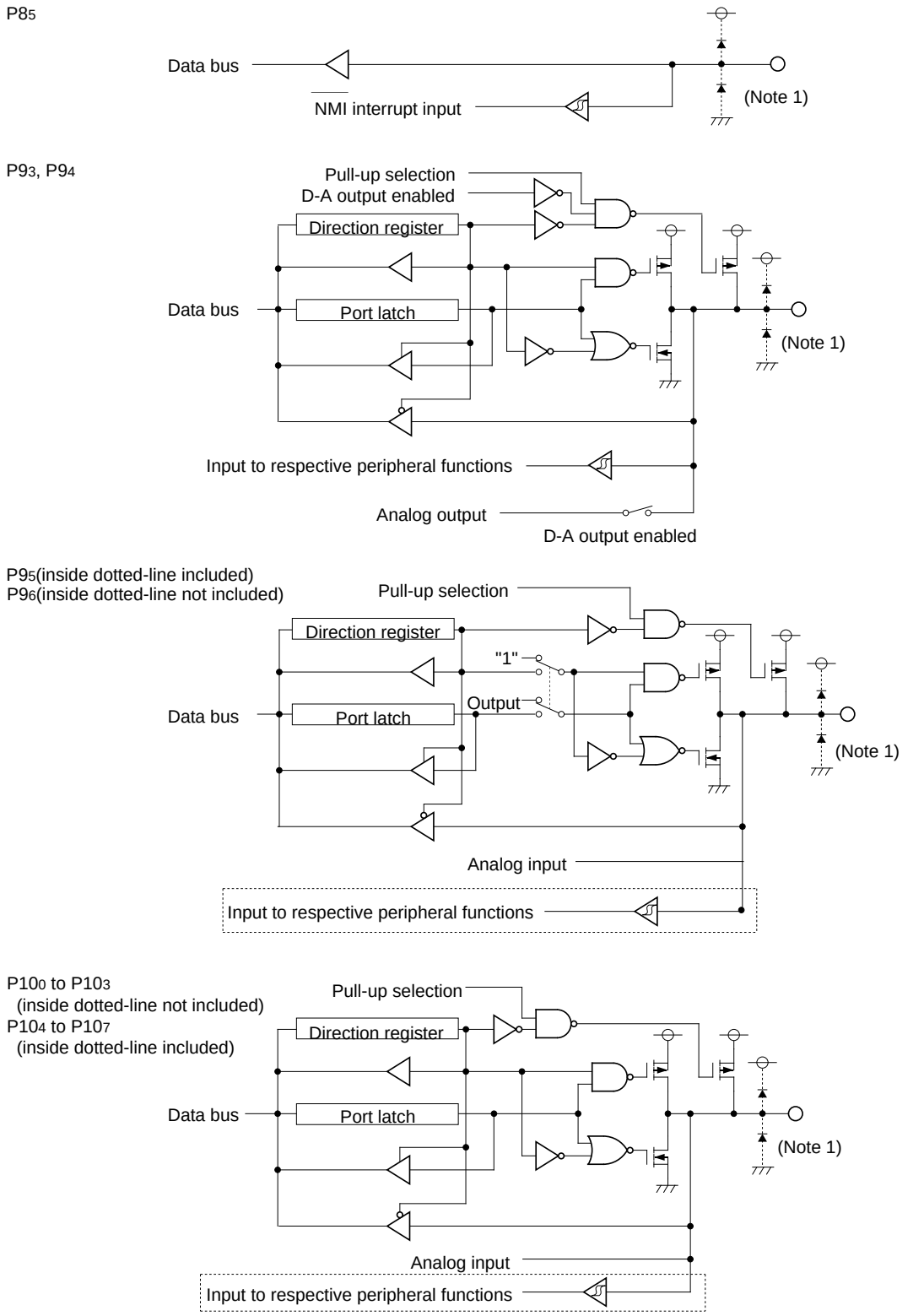

Note 1: ·····|◄····· symbolizes a parasitic diode.
Do not apply a voltage higher than Vcc to each port.
Note 2: In M30623(80-pin package), P10 to P17, P44 to P47, P72 to P75, and P91 are not connected to external pin.

Figure 1.23.3. Programmable I/O ports (3)

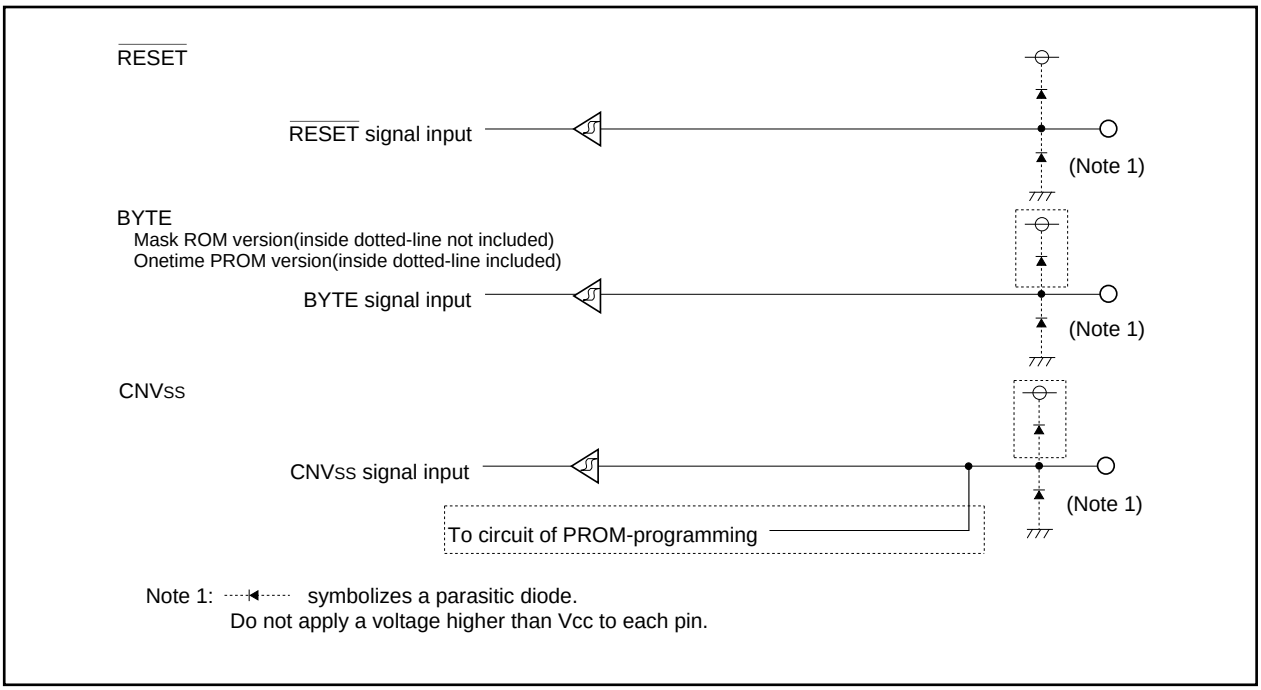

Figure 1.23.4. I/O pins

Port Pi direction register (Note 1)

b7	b6	b5	b4	b3	b2	b1	b0

Symbol	Address	When reset
PDi (i = 0 to 10, except 8)	$03E2_{16}$, $03E3_{16}$, $03E6_{16}$, $03E7_{16}$, $03EA_{16}$ $03EB_{16}$, $03EE_{16}$, $03EF_{16}$, $03F3_{16}$, $03F6_{16}$	00_{16}

Bit symbol	Bit name	Function	R	W
PDi_0	Port Pi_0 direction register	0 : Input mode (Functions as an input port) 1 : Output mode (Functions as an output port) (i = 0 to 10 except 8)	○	○
PDi_1	Port Pi_1 direction register		○	○
PDi_2	Port Pi_2 direction register		○	○
PDi_3	Port Pi_3 direction register		○	○
PDi_4	Port Pi_4 direction register		○	○
PDi_5	Port Pi_5 direction register		○	○
PDi_6	Port Pi_6 direction register		○	○
PDi_7	Port Pi_7 direction register		○	○

Note 1: Set bit 2 of protect register (address $000A_{16}$) to “1” before rewriting to the port P9 direction register.
Note 2: In M30623(80-pin package), P1, $P4_4$ to $P4_7$, $P7_2$ to $P7_5$, and $P9_1$ are not connected to external pin, But exist inside microcomputer. So set these ports for output mode.

Port P8 direction register

b7	b6	b5	b4	b3	b2	b1	b0
		X					

Symbol	Address	When reset
PD8	$03F2_{16}$	$00X00000_2$

Bit symbol	Bit name	Function	R	W
PD8_0	Port $P8_0$ direction register	0 : Input mode (Functions as an input port) 1 : Output mode (Functions as an output port)	○	○
PD8_1	Port $P8_1$ direction register		○	○
PD8_2	Port $P8_2$ direction register		○	○
PD8_3	Port $P8_3$ direction register		○	○
PD8_4	Port $P8_4$ direction register		○	○
	Nothing is assigned. In an attempt to write to this bit, write “0”. The value, if read, turns out to be indeterminate.		—	—
PD8_6	Port $P8_6$ direction register	0 : Input mode (Functions as an input port) 1 : Output mode (Functions as an output port)	○	○
PD8_7	Port $P8_7$ direction register		○	○

Figure 1.23.5. Direction register

Port Pi register

b7	b6	b5	b4	b3	b2	b1	b0

Symbol	Address	When reset
Pi (i = 0 to 10, except 8)	03E0$_{16}$, 03E1$_{16}$, 03E4$_{16}$, 03E5$_{16}$, 03E8$_{16}$	Indeterminate
	03E9$_{16}$, 03EC$_{16}$, 03ED$_{16}$, 03F1$_{16}$, 03F4$_{16}$	Indeterminate

Bit symbol	Bit name	Function	R	W
Pi_0	Port Pi$_0$ register	Data is input and output to and from each pin by reading and writing to and from each corresponding bit 0 : “L” level data 1 : “H” level data (Note) (i = 0 to 10 except 8)	○	○
Pi_1	Port Pi$_1$ register		○	○
Pi_2	Port Pi$_2$ register		○	○
Pi_3	Port Pi$_3$ register		○	○
Pi_4	Port Pi$_4$ register		○	○
Pi_5	Port Pi$_5$ register		○	○
Pi_6	Port Pi$_6$ register		○	○
Pi_7	Port Pi$_7$ register		○	○

Note 1: Since P7$_0$ and P7$_1$ are N-channel open drain ports, the data is high-impedance.
Note 2: In M30623(80-pin package), P1, P4$_4$ to P4$_7$, P7$_2$ to P7$_5$, and P9$_1$ are not connected to external pin, But exist inside microcomputer. So set these ports for output mode.

Port P8 register

b7	b6	b5	b4	b3	b2	b1	b0

Symbol	Address	When reset
P8	03F0$_{16}$	Indeterminate

Bit symbol	Bit name	Function	R	W
P8_0	Port P8$_0$ register	Data is input and output to and from each pin by reading and writing to and from each corresponding bit (except for P8$_5$) 0 : “L” level data 1 : “H” level data	○	○
P8_1	Port P8$_1$ register		○	○
P8_2	Port P8$_2$ register		○	○
P8_3	Port P8$_3$ register		○	○
P8_4	Port P8$_4$ register		○	○
P8_5	Port P8$_5$ register		○	×
P8_6	Port P8$_6$ register		○	○
P8_7	Port P8$_7$ register		○	○

Figure 1.23.6. Port register

Pull-up control register 0

b7	b6	b5	b4	b3	b2	b1	b0

Symbol	Address	When reset
PUR0	$03FC_{16}$	00_{16}

Bit symbol	Bit name	Function	R	W
PU00	$P0_0$ to $P0_3$ pull-up	The corresponding port is pulled high with a pull-up resistor 0 : Not pulled high 1 : Pulled high	○	○
PU01	$P0_4$ to $P0_7$ pull-up		○	○
PU02	$P1_0$ to $P1_3$ pull-up		○	○
PU03	$P1_4$ to $P1_7$ pull-up		○	○
PU04	$P2_0$ to $P2_3$ pull-up		○	○
PU05	$P2_4$ to $P2_7$ pull-up		○	○
PU06	$P3_0$ to $P3_3$ pull-up		○	○
PU07	$P3_4$ to $P3_7$ pull-up		○	○

Note 1: In M30623(80-pin package), P1 is not connected to external pin, but exist inside microcomputer. so set this port for output mode.

Pull-up control register 1

b7	b6	b5	b4	b3	b2	b1	b0

Symbol	Address	When reset
PUR1	$03FD_{16}$	00_{16} (Note 2)

Bit symbol	Bit name	Function	R	W
PU10	$P4_0$ to $P4_3$ pull-up	The corresponding port is pulled high with a pull-up resistor 0 : Not pulled high 1 : Pulled high	○	○
PU11	$P4_4$ to $P4_7$ pull-up		○	○
PU12	$P5_0$ to $P5_3$ pull-up		○	○
PU13	$P5_4$ to $P5_7$ pull-up		○	○
PU14	$P6_0$ to $P6_3$ pull-up		○	○
PU15	$P6_4$ to $P6_7$ pull-up		○	○
PU16	$P7_0$ to $P7_3$ pull-up (Note 1)		○	○
PU17	$P7_4$ to $P7_7$ pull-up		○	○

Note 1: Since $P7_0$ and $P7_1$ are N-channel open drain ports, pull-up is not available for them.
Note 2: When the V_{CC} level is being impressed to the CNV_{SS} terminal, this register becomes to 02_{16} when reset (PU11 becomes to "1").
Note 3: In M30623(80-pin package), $P4_4$ to $P4_7$, and $P7_2$ to $P7_5$ are not connected to external pin, but exist inside microcomputer. So set these ports for output mode.

Pull-up control register 2

b7	b6	b5	b4	b3	b2	b1	b0
╳	╳						

Symbol	Address	When reset
PUR2	$03FE_{16}$	00_{16}

Bit symbol	Bit name	Function	R	W
PU20	$P8_0$ to $P8_3$ pull-up	The corresponding port is pulled high with a pull-up resistor 0 : Not pulled high 1 : Pulled high	○	○
PU21	$P8_4$ to $P8_7$ pull-up (Except $P8_5$)		○	○
PU22	$P9_0$ to $P9_3$ pull-up		○	○
PU23	$P9_4$ to $P9_7$ pull-up		○	○
PU24	$P10_0$ to $P10_3$ pull-up		○	○
PU25	$P10_4$ to $P10_7$ pull-up		○	○
Nothing is assigned. In an attempt to write to these bits, write "0". The value, if read, turns out to be "0".			—	—
			—	—

Note 1: In M30623(80-pin package), P1 is not connected to external pin, but exist inside microcomputer. so set this port for output mode.

Figure 1.23.7. Pull-up control register

Port control register

b7	b6	b5	b4	b3	b2	b1	b0

Symbpl	Address	When reset
PCR	$03FF_{16}$	00_{16}

Bit symbol	Bit name	Function	R	W
PCR0	Port P1 control register	0 : When input port, read port input level. When output port, read the contents of port P1 register. 1 : Read the contents of port P1 register though input/output port.	○	○
Nothing is assigned. In an attempt to write to these bits, write “0”. The value, if read, turns out to be “0”.			—	—

Figure 1.23.8. Port control register

Table 1.23.1. Example connection of unused pins in single-chip mode

Pin name	Connection
Ports P0 to P10 (excluding $P8_5$) (Note 1)	After setting for input mode, connect every pin to V_{SS} or V_{CC} via a resistor; or after setting for output mode, leave these pins open.
X_{OUT} (Note 2)	Open
$\overline{NMI}$	Connect via resistor to V_{CC} (pull-up)
AV_{CC}	Connect to V_{CC}
AV_{SS}, V_{REF}, BYTE	Connect to V_{SS}

Note 1: In M30623(80-pin package), P1, $P4_4$ to $P4_7$, $P7_2$ to $P7_5$, and $P9_1$ are not connected to external pin, but exist inside microcomputer. So set these ports for output mode.
Note 2: With external clock input to X_{IN} pin.

Table 1.23.2. Example connection of unused pins in memory expansion mode and microprocessor mode

Pin name	Connection
Ports P6 to P10 (excluding $P8_5$) (Note 1)	After setting for input mode, connect every pin to V_{SS} or V_{CC} via a resistor; or after setting for output mode, leave these pins open.
$P4_5$ / $\overline{CS1}$ to $P4_7$ / $\overline{CS3}$	Sets ports to input mode, sets bits $\overline{CS1}$ through $\overline{CS3}$ to 0, and connects to Vcc via resistors (pull-up).
$\overline{BHE}$, ALE, $\overline{HLDA}$, X_{OUT}(Note 2), BCLK	Open
$\overline{HOLD}$, $\overline{RDY}$, $\overline{NMI}$	Connect via resistor to V_{CC} (pull-up)
AV_{CC}	Connect to V_{CC}
AV_{SS}, V_{REF}	Connect to V_{SS}

Note 1: In M30623(80-pin package), $P7_2$ to $P7_5$, $P9_1$ are not connected to external pin, but exist inside microcomputer. So set these ports for output mode.
Note 2: With external clock input to X_{IN} pin.
Note 3: The M16C/62T group is not guaranteed to operate in memory expansion and microprocessor modes.

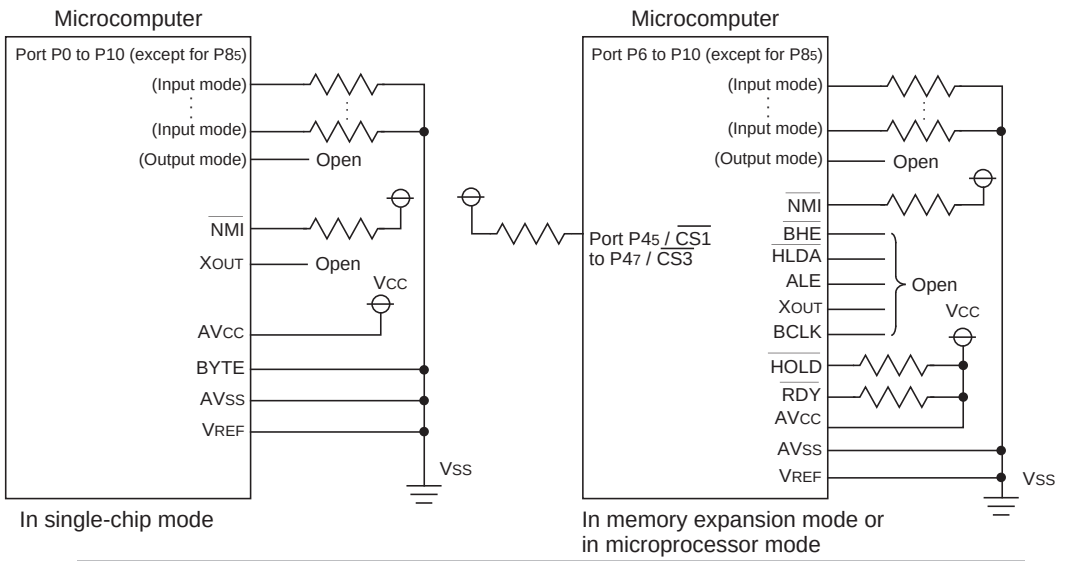

Note 1: In M30623(80-pin package), $P7_2$ to $P7_5$, $P9_1$ are not connected to external pin, but exist inside microcomputer. So set these ports for output mode.
Note 2: The M16C/62T group is not guaranteed to operate in memory expansion and microprocessor modes.
Note 3: When the wiring between NMI and V_{CC} is long, pull-up via resistor.

Figure 1.23.9. Example connection of unused pins

Usage Precaution

Timer A (timer mode)

(1) Reading the timer Ai register while a count is in progress allows reading, with arbitrary timing, the value of the counter. Reading the timer Ai register with the reload timing gets “$FFFF_{16}$”. Reading the timer Ai register after setting a value in the timer Ai register with a count halted but before the counter starts counting gets a proper value.

Timer A (event counter mode)

(1) Reading the timer Ai register while a count is in progress allows reading, with arbitrary timing, the value of the counter. Reading the timer Ai register with the reload timing gets “$FFFF_{16}$” by underflow or “0000_{16}” by overflow. Reading the timer Ai register after setting a value in the timer Ai register with a count halted but before the counter starts counting gets a proper value.

(2) When stop counting in free run type, set timer again.

Timer A (one-shot timer mode)

(1) Setting the count start flag to “0” while a count is in progress causes as follows:
- The counter stops counting and a content of reload register is reloaded.
- The TAi_{OUT} pin outputs “L” level.
- The interrupt request generated and the timer Ai interrupt request bit goes to “1”.

(2) The timer Ai interrupt request bit goes to “1” if the timer's operation mode is set using any of the following procedures:
- Selecting one-shot timer mode after reset.
- Changing operation mode from timer mode to one-shot timer mode.
- Changing operation mode from event counter mode to one-shot timer mode.

Therefore, to use timer Ai interrupt (interrupt request bit), set timer Ai interrupt request bit to “0” after the above listed changes have been made.

Timer A (pulse width modulation mode)

(1) The timer Ai interrupt request bit becomes “1” if setting operation mode of the timer in compliance with any of the following procedures:
- Selecting PWM mode after reset.
- Changing operation mode from timer mode to PWM mode.
- Changing operation mode from event counter mode to PWM mode.

Therefore, to use timer Ai interrupt (interrupt request bit), set timer Ai interrupt request bit to “0” after the above listed changes have been made.

(2) Setting the count start flag to “0” while PWM pulses are being output causes the counter to stop counting. If the TAi_{OUT} pin is outputting an “H” level in this instance, the output level goes to “L”, and the timer Ai interrupt request bit goes to “1”. If the TAi_{OUT} pin is outputting an “L” level in this instance, the level does not change, and the timer Ai interrupt request bit does not becomes “1”.

Timer B (timer mode, event counter mode)

(1) Reading the timer Bi register while a count is in progress allows reading , with arbitrary timing, the value of the counter. Reading the timer Bi register with the reload timing gets “$FFFF_{16}$”. Reading the timer Bi register after setting a value in the timer Bi register with a count halted but before the counter starts counting gets a proper value.

Timer B (pulse period/pulse width measurement mode)

(1) If changing the measurement mode select bit is set after a count is started, the timer Bi interrupt request bit goes to “1”.

(2) When the first effective edge is input after a count is started, an indeterminate value is transferred to the reload register. At this time, timer Bi interrupt request is not generated.

A-D Converter

(1) Write to each bit (except bit 6) of A-D control register 0, to each bit of A-D control register 1, and to bit 0 of A-D control register 2 when A-D conversion is stopped (before a trigger occurs).
In particular, when the Vref connection bit is changed from “0” to “1”, start A-D conversion after an elapse of 1 μs or longer.

(2) When changing A-D operation mode, select analog input pin again.

(3) Using one-shot mode or single sweep mode
Read the correspondence A-D register after confirming A-D conversion is finished. (It is known by A-D conversion interrupt request bit.)

(4) Using repeat mode, repeat sweep mode 0 or repeat sweep mode 1
Use the undivided main clock as the internal CPU clock.

Stop Mode and Wait Mode

(1) When returning from stop mode by hardware reset, $\overline{\text{RESET}}$ pin must be set to “L” level until main clock oscillation is stabilized.

(2) When switching to either wait mode or stop mode, instructions occupying four bytes either from the WAIT instruction or from the instruction that sets the every-clock stop bit to “1” within the instruction queue are prefetched and then the program stops. So put at least four NOPs in succession either to the WAIT instruction or to the instruction that sets the every-clock stop bit to “1”.

Interrupts

(1) Reading address 00000_{16}

- When maskable interrupt is occurred, CPU read the interrupt information (the interrupt number and interrupt request level) in the interrupt sequence.
  The interrupt request bit of the certain interrupt written in address 00000_{16} will then be set to “0”.
  Reading address 00000_{16} by software sets enabled highest priority interrupt source request bit to “0”.
  Though the interrupt is generated, the interrupt routine may not be executed.
  Do not read address 00000_{16} by software.

(2) Setting the stack pointer

- The value of the stack pointer immediately after reset is initialized to 0000_{16}. Accepting an interrupt before setting a value in the stack pointer may become a factor of runaway. Be sure to set a value in the stack pointer before accepting an interrupt.
  When using the $\overline{\text{NMI}}$ interrupt, initialize the stack point at the beginning of a program. Concerning the first instruction immediately after reset, generating any interrupts including the $\overline{\text{NMI}}$ interrupt is prohibited.

(3) The $\overline{\text{NMI}}$ interrupt

- As for the $\overline{\text{NMI}}$ interrupt pin, an interrupt cannot be disabled. Connect it to the V_{CC} pin via a resistor (pull-up) if unused. Be sure to work on it.
- Do not get either into stop mode with the $\overline{\text{NMI}}$ pin set to “L”.

(4) External interrupt

- When the polarity of the $\overline{INT0}$ to $\overline{INT5}$ pins is changed, the interrupt request bit is sometimes set to "1". After changing the polarity, set the interrupt request bit to "0".

Note 1: In M30623 (80-pin package), can not use $\overline{INT3}$ to $\overline{INT5}$ as the interrupt factors, because P15/D13/$\overline{INT3}$ to P17/D15/$\overline{INT5}$ have no corresponding external pin.

(5) Rewrite the interrupt control register

- To rewrite the interrupt control register, do so at a point that does not generate the interrupt request for that register. If there is possibility of the interrupt request occur, rewrite the interrupt control register after the interrupt is disabled. The program examples are described as follow:

Example 1:

```
INT_SWITCH1:
    FCLR    I              ; Disable interrupts.
    AND.B   #00h, 0055h    ; Clear TA0IC int. priority level and int. request bit.
    NOP                    ; Four NOP instructions are required when using HOLD function.
    NOP
    FSET    I              ; Enable interrupts.
```

Example 2:

```
INT_SWITCH2:
    FCLR    I              ; Disable interrupts.
    AND.B   #00h, 0055h    ; Clear TA0IC int. priority level and int. request bit.
    MOV.W   MEM, R0        ; Dummy read.
    FSET    I              ; Enable interrupts.
```

Example 3:

```
INT_SWITCH3:
    PUSHC   FLG            ; Push Flag register onto stack
    FCLR    I              ; Disable interrupts.
    AND.B   #00h, 0055h    ; Clear TA0IC int. priority level and int. request bit.
    POPC    FLG            ; Enable interrupts.
```

The reason why two NOP instructions (four when using the HOLD function) or dummy read are inserted before FSET I in Examples 1 and 2 is to prevent the interrupt enable flag I from being set before the interrupt control register is rewritten due to effects of the instruction queue.

- When a instruction to rewrite the interrupt control register is executed but the interrupt is disabled, the interrupt request bit is not set sometimes even if the interrupt request for that register has been generated. This will depend on the instruction. If this creates problems, use the below instructions to change the register.
  Instructions : AND, OR, BCLR, BSET

Usage precaution of built-in PROM version

(1) All built-in PROM versions

High voltage is required to program to the built-in PROM. Be careful not to apply excessive voltage. Be especially careful during power-on.

(2) One Time PROM version

One Time PROM versions shipped in blank (M30622ECTFP/ECVFP, M30623ECTGP/ECVGP), of which built-in PROMs are programmed by users, are also provided. For these microcomputers, a programming test and screening are not performed in the assembly process and the following processes. To improve their reliability after programming, we recommend to program and test as flow shown in Figure 1.24.1 before use.

But, in case of using as the test of cars loading, mass production, correspond to programming PROM, and screened shipped in programming, please require.

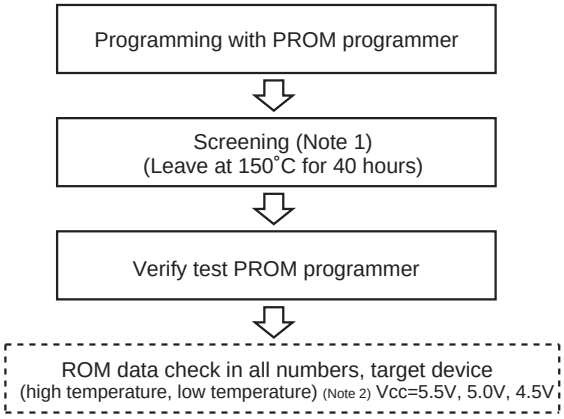

Note 1: Never expose to 150˚C exceeding 100 hours.
Note 2: Test in responce to using temperature limit.

Figure 1.24.1. Programming and test flow for One Time PROM version

Items to be submitted when ordering masked ROM version

Please submit the following when ordering masked ROM products:

(1) Mask ROM confirmation form

(2) Mark specification sheet

(3) ROM data : EPROMs or floppy disks

*: In the case of EPROMs, there sets of EPROMs are required per pattern.

*: In the case of floppy disks, 3.5-inch double-sided high-density disk (IBM format) is required per pattern.

Items to be submitted when ordering data to be written to ROM

Please submit the following when ordering data to be written to one-time PROM products at the factory:

(1) ROM writing order form

(2) Mark specification sheet

(3) ROM data : EPROMs or floppy disks

*: In the case of EPROMs, there sets of EPROMs are required per pattern.

*: In the case of floppy disks, 3.5-inch double-sided high-density disk (IBM format) is required per pattern.

Table 1.26.1. Absolute maximum ratings

Symbol	Parameter		Condition	Rated value		Unit
				One-time PROM version	Mask ROM version	
Vcc	Supply voltage		AVcc=Vcc, AVss=Vss	−0.3 to 7	−0.3 to 6.5	V
AVcc	Analog supply voltage		AVcc=Vcc, AVss=Vss	−0.3 to 7	−0.3 to 6.5	V
V_I	Input voltage	$\overline{RESET}$, V_{REF}, X_{IN} $P0_0$ to $P0_7$, $P1_0$ to $P1_7$, $P2_0$ to $P2_7$, $P3_0$ to $P3_7$, $P4_0$ to $P4_3$, $P5_0$ to $P5_7$, $P6_0$ to $P6_7$, $P7_2$ to $P7_7$, $P8_0$ to $P8_7$, $P9_0$ to $P9_7$, $P10_0$ to $P10_7$		−0.3 to Vcc+0.3	−0.3 to Vcc+0.3	V
		$P7_0$, $P7_1$		−0.3 to 7	−0.3 to 6.5	V
		CNV_{SS}, BYTE		−0.3 to 7 (Note 1)	−0.3 to Vcc+0.3	V
V_O	Output voltage	$P0_0$ to $P0_7$, $P1_0$ to $P1_7$, $P2_0$ to $P2_7$, $P3_0$ to $P3_7$, $P4_0$ to $P4_3$, $P5_0$ to $P5_7$, $P6_0$ to $P6_7$, $P7_2$ to $P7_7$, $P8_0$ to $P8_4$, $P8_6$, $P8_7$, $P9_0$ to $P9_7$, $P10_0$ to $P10_7$, X_{OUT}		−0.3 to Vcc+0.3	−0.3 to Vcc+0.3	V
		$P7_0$, $P7_1$,		−0.3 to 7	−0.3 to 6.5	V
P_d	Power dissipation		−40°C < Ta ≤ 85°C	300	300	mW
			85°C <Ta ≤ 125°C	200	200	
T_{opr}	Operating ambient temperature			−40 to 125 (Note 2)	−40 to 125 (Note 2)	°C
T_{stg}	Storage temperature			− 65 to 150	− 65 to 150	°C

Note 1: When writing to EPROM ,only CNVss is –0.3 to 13.5 (V) .

Note 2: In case of 85°C guaranteed version, -40°C to 85°C. In case of 125°C guaranteed version, -40°C to 125°C.

Note 3: In M30623(80-pin package), $P1_0$ to $P1_7$, $P4_4$ to $P4_7$,$P7_2$ to $P7_5$,and $P9_1$ are not connected to the external pin.

Table 1.26.2. Recommended operating conditions (referenced to V_{CC} = 4.2V(Note 1) to 5.5V at Ta = – 40°C to 125°C(Note 2) unless otherwise specified)

Symbol	Parameter		Standard			Unit
			Min	Typ.	Max.	
Vcc	Supply voltage		4.2 (Note 1)	5.0	5.5	V
AVcc	Analog supply voltage			Vcc		V
Vss	Supply voltage			0		V
AVss	Analog supply voltage			0		V
V_{IH}	HIGH input voltage	$P2_0$ to $P2_7$, $P3_0$ to $P3_7$, $P4_0$ to $P4_7$, $P5_0$ to $P5_7$, $P6_0$ to $P6_7$, $P7_0$ to $P7_7$, $P8_0$ to $P8_7$, $P9_0$ to $P9_7$, $P10_0$ to $P10_7$, X_{IN}, $\overline{RESET}$, CNV_{SS}, BYTE	0.8Vcc		Vcc	V
V_{IH}	HIGH input voltage	$P0_0$ to $P0_7$, $P1_0$ to $P1_7$ (during single-chip mode)	0.8Vcc		Vcc	V
V_{IL}	LOW input voltage	$P2_0$ to $P2_7$, $P3_0$ to $P3_7$, $P4_0$ to $P4_7$, $P5_0$ to $P5_7$, $P6_0$ to $P6_7$, $P7_0$ to $P7_7$, $P8_0$ to $P8_7$, $P9_0$ to $P9_7$, $P10_0$ to $P10_7$, X_{IN}, $\overline{RESET}$, CNV_{SS}, BYTE	0		0.2Vcc	V
V_{IL}	LOW input voltage	$P0_0$ to $P0_7$, $P1_0$ to $P1_7$ (during single-chip mode)	0		0.2Vcc	V
$I_{OH (peak)}$	HIGH peak output current	$P0_0$ to $P0_7$, $P1_0$ to $P1_7$, $P2_0$ to $P2_7$,$P3_0$ to $P3_7$, $P4_0$ to $P4_7$, $P5_0$ to $P5_7$, $P6_0$ to $P6_7$,$P7_2$ to $P7_7$, $P8_0$ to $P8_4$,$P8_6$,$P8_7$,$P9_0$ to $P9_7$,$P10_0$ to $P10_7$ (Note 4)			-10	mA
$I_{OH (avg)}$	HIGH average output current	$P0_0$ to $P0_7$, $P2_0$ to $P2_7$,$P3_0$ to $P3_7$, $P4_0$ to $P4_7$, $P5_0$ to $P5_7$, $P6_0$ to $P6_7$,$P7_2$ to $P7_7$, $P8_0$ to $P8_4$,$P8_6$,$P8_7$,$P9_0$ to $P9_7$,$P10_0$ to $P10_7$			-5	mA
$I_{OL (peak)}$	LOW peak output current	$P0_0$ to $P0_7$, $P2_0$ to $P2_7$,$P3_0$ to $P3_7$, $P4_0$ to $P4_7$, $P5_0$ to $P5_7$, $P6_0$ to $P6_7$,$P7_0$ to $P7_7$, $P8_0$ to $P8_4$,$P8_6$,$P8_7$,$P9_0$ to $P9_7$,$P10_0$ to $P10_7$ (Note 4)			10	mA
$I_{OL (avg)}$	LOW average output current	$P0_0$ to $P0_7$, $P2_0$ to $P2_7$,$P3_0$ to $P3_7$, $P4_0$ to $P4_7$, $P5_0$ to $P5_7$, $P6_0$ to $P6_7$,$P7_0$ to $P7_7$, $P8_0$ to $P8_4$,$P8_6$,$P8_7$,$P9_0$ to $P9_7$,$P10_0$ to $P10_7$			5	mA
f (X_{IN})	Main clock input oscillation frequency	Vcc=4.2V (Note 1) to 5.5V			16	MHz
f (X_{CIN})	Subclock oscillation frequency			32.768	50	kHz

Note 1: In case of One-time PROM version, 4.5V.

Note 2: In case of 85°C guaranteed version, -40°C to 85°C. In case of 125°C guaranteed version, -40°C to 125°C.

Note 3: The mean output current is the mean value within 100ms.

Note 4: In M30622(100-pin package), the total I_{OL} (peak) and the total I_{OH} (peak) for ports P0, P1, P2, $P8_6$, $P8_7$, P9, and P10 and the total I_{OL} (peak) and the total I_{OH} (peak) for ports P3, P4, P5, P6, P7, and $P8_0$ to $P8_4$ severally must be 80mA max.
In M30623(80-pin package), Vcc pin and Vss pin are each one pin, so the total I_{OL} (peak) and the total I_{OH} (peak) for all ports must be 80mA max.

Note 5: The loss power effect of the whole part-port(the output port transistor and the pull-up resistor) must be 50mW max, so that power dissipation at Ta=125°C(include Ta >85°C) doesn't exceed absolute maximum ratings.

Note 6: In M30623(80-pin package), $P1_0$ to $P1_7$, $P4_4$ to $P4_7$,$P7_2$ to $P7_5$, and $P9_1$ are not connected to the external pin.

Table 1.26.3. Electrical characteristics (referenced to V_{CC} = 5V, V_{SS} = 0V at Ta = -40°C to 125°C(Note 1), f(X_{IN}) = 16MHz unless otherwise specified)

Symbol	Parameter			Measuring condition	Standard Min	Standard Typ.	Standard Max.	Unit
V_{OH}	HIGH output voltage	$P0_0$ to $P0_7$, $P1_0$ to $P1_7$, $P2_0$ to $P2_7$, $P3_0$ to $P3_7$, $P4_0$ to $P4_7$, $P5_0$ to $P5_7$, $P6_0$ to $P6_7$, $P7_2$ to $P7_7$, $P8_0$ to $P8_4$, $P8_6$, $P8_7$, $P9_0$ to $P9_7$, $P10_0$ to $P10_7$		I_{OH}= −5mA Vcc=4.0V to 5.5V	0.6Vcc			V
V_{OH}	HIGH output voltage	$P0_0$ to $P0_7$, $P1_0$ to $P1_7$, $P2_0$ to $P2_7$, $P3_0$ to $P3_7$, $P4_0$ to $P4_7$, $P5_0$ to $P5_7$, $P6_0$ to $P6_7$, $P7_2$ to $P7_7$, $P8_0$ to $P8_4$, $P8_6$, $P8_7$, $P9_0$ to $P9_7$, $P10_0$ to $P10_7$		I_{OH}=−200μA Vcc=4.0V to 5.5V	0.9Vcc			V
V_{OH}	HIGH output voltage	X_{OUT}	HIGHPOWER	I_{OH}=−1mA	3.0			V
			LOWPOWER	I_{OH}=−0.5mA	3.0			
	HIGH output voltage	X_{COUT}	HIGHPOWER	With no load applied		3.0		V
			LOWPOWER	With no load applied		1.6		
V_{OL}	LOW output voltage	$P0_0$ to $P0_7$, $P1_0$ to $P1_7$, $P2_0$ to $P2_7$, $P3_0$ to $P3_7$, $P4_0$ to $P4_7$, $P5_0$ to $P5_7$, $P6_0$ to $P6_7$, $P7_0$ to $P7_7$, $P8_0$ to $P8_4$, $P8_6$, $P8_7$, $P9_0$ to $P9_7$, $P10_0$ to $P10_7$		I_{OL}=5mA Vcc=4.0V to 5.5V			0.4Vcc	V
V_{OL}	LOW output voltage	$P0_0$ to $P0_7$, $P1_0$ to $P1_7$, $P2_0$ to $P2_7$, $P3_0$ to $P3_7$, $P4_0$ to $P4_7$, $P5_0$ to $P5_7$, $P6_0$ to $P6_7$, $P7_0$ to $P7_7$, $P8_0$ to $P8_4$, $P8_6$, $P8_7$, $P9_0$ to $P9_7$, $P10_0$ to $P10_7$		I_{OL}=200μA Vcc=4.0V to 5.5V			0.1Vcc	V
V_{OL}	LOW output voltage	X_{OUT}	HIGHPOWER	I_{OL}=1mA			2.0	V
			LOWPOWER	I_{OL}=0.5mA			2.0	
	LOW output voltage	X_{COUT}	HIGHPOWER	With no load applied		0		V
			LOWPOWER	With no load applied		0		
V_{T+}-V_{T-}	Hysteresis	$TA0_{IN}$ to $TA4_{IN}$, $TA0_{OUT}$ to $TA4_{OUT}$, $TB0_{IN}$ to $TB5_{IN}$, $\overline{INT_0}$ to $\overline{INT_5}$, $P8_2$ to $P8_4$, $\overline{AD_{TRG}}$, $\overline{CTS_0}$ to $\overline{CTS_2}$, CLK_0 to $CLK4$, RXD_0 to RXD_2, SIN_3, SIN_4, $\overline{KI_0}$ to $\overline{KI_3}$, $\overline{NMI}$			0.2		0.8	V
V_{T+}-V_{T-}	Hysteresis	$\overline{RESET}$, CNVss, BYTE			0.5		1.5	V
V_{T+}-V_{T-}	Hysteresis	X_{IN}			0.2		0.8	V
I_{IH}	HIGH input current	$P0_0$ to $P0_7$, $P1_0$ to $P1_7$, $P2_0$ to $P2_7$, $P3_0$ to $P3_7$, $P4_0$ to $P4_7$, $P5_0$ to $P5_7$, $P6_0$ to $P6_7$, $P7_0$ to $P7_7$, $P8_0$ to $P8_7$, $P9_0$ to $P9_7$, $P10_0$ to $P10_7$, X_{IN}, $\overline{RESET}$, CNVss, BYTE		V_I=5V			5	μA
I_{IL}	LOW input current	$P0_0$ to $P0_7$, $P1_0$ to $P1_7$, $P2_0$ to $P2_7$, $P3_0$ to $P3_7$, $P4_0$ to $P4_7$, $P5_0$ to $P5_7$, $P6_0$ to $P6_7$, $P7_0$ to $P7_7$, $P8_0$ to $P8_7$, $P9_0$ to $P9_7$, $P10_0$ to $P10_7$, X_{IN}, $\overline{RESET}$, CNVss, BYTE		No pull-up resistance V_I=0V			−5	μA
I_{IL}	LOW input current	$P0_0$ to $P0_7$, $P1_0$ to $P1_7$, $P2_0$ to $P2_7$, $P3_0$ to $P3_7$, $P4_0$ to $P4_7$, $P5_0$ to $P5_7$, $P6_0$ to $P6_7$, $P7_2$ to $P7_7$, $P8_0$ to $P8_4$, $P8_6$, $P8_7$, $P9_0$ to $P9_7$, $P10_0$ to $P10_7$		Pull-up resistance V_I=0V	−70	−100	−150	μA
R_{fXIN}	Feedback resistance	X_{IN}				1.0		MΩ
R_{fXCIN}	Feedback resistance	X_{CIN}				6.0		MΩ
V_{RAM}	RAM retention voltage			When clock is stopped	2			V
Icc	Power supply current			In single-chip mode, the output pins are open and other pins are Vss; f(X_{IN})=16MHz, Square wave, diveide-by-1, no-wait		28	38	mA
				f(X_{IN})=16kHz, Square wave, diveide-by-1, 1-wait		24		mA
				f(X_{IN})=16kHz, Square wave, diveide-by-8, no-wait		6.7		mA
				f(X_{CIN})=32kHz When a WAIT instruction is executed, Ta=25°C		4.0		μA
				Ta=25°C when clock is stopped			2	μA
				Ta=85°C when clock is stopped			20	
				Ta=125°C when clock is stopped			50	

Note 1: In case of 85°C guaranteed version, -40°C to 85°C. In case of 125°C guaranteed version, -40°C to 125°C.
Note 2: In M30623(80-pin package), $P1_0$ to $P1_7$, $P4_4$ to $P4_7$,$P7_2$ to $P7_5$, and $P9_1$ are not connected to the external pin.

Table 1.26.4. A-D conversion characteristics (referenced to V_{CC} = AV_{CC}= 5V, Vss = AV_{SS} = 0V, Ta = 25°C, f(X_{IN}) = 16MHz unless otherwise specified)

Symbol	Parameter		Measuring condition		Standard Min.	Standard Typ.	Standard Max.	Unit
-	Resolution		V_{REF} = V_{CC} = 5V				10	Bits
-	Absolute accuracy(8bit)		V_{REF} = AV_{CC} = V_{CC} = 5V, ϕ_{AD}≤10MHz				±2	LSB
-	Absolute accuracy (10bit)	Sample & hold function not available	V_{REF} = AV_{CC} = V_{CC} = 5V, ϕ_{AD}≤10MHz				±3	LSB
		Sample & hold function available	V_{REF}=AV_{CC} =V_{CC} =5V, ϕ_{AD}≤10MHz	AN_0 to AN_7,AN_{00} to AN_{07}, AN_{20} to AN_{27}, $ANEX_0$, $ANEX_1$ input			±3	LSB
				External op-amp connection mode			±7	LSB
R_{LADDER}	Ladder resistance		V_{REF} = V_{CC} = 5V		10		40	kΩ
t_{CONV}	Conversion time(10bit)		f(X_{IN})=16MHz, ϕ_{AD} = f_{AD}/2 = 8MHz		4.125			μs
			f(X_{IN})=10MHz, ϕ_{AD} = f_{AD} = 10MHz		3.3			
t_{CONV}	Conversion time(8bit)		f(X_{IN})=16MHz, ϕ_{AD} = f_{AD}/2 = 8MHz		3.5			μs
			f(X_{IN})=10MHz, ϕ_{AD} = ϕ_{AD} = 10MHz		2.8			
t_{SAMP}	Sampling time		f(X_{IN})=16MHz, ϕ_{AD} = f_{AD}/2 = 8MHz		0.375			μs
			f(X_{IN})=10MHz, ϕ_{AD} = f_{AD} = 10MHz		0.3			
V_{REF}	Reference voltage				2		V_{CC}	V
V_{IA}	Analog input voltage				0		V_{REF}	V

Note 1: Divide the frequency if f(X_{IN}) exceeds 10 MHz, and make ϕ_{AD} equal to or lower than 10 MHz.

Table 1.26.5. D-A conversion characteristics (referenced to V_{CC} = 5V, V_{SS} = AV_{SS} = 0V, V_{REF} = 5V at Ta = 25°C, f(X_{IN}) = 16MHz unless otherwise specified)

Symbol	Parameter	Measuring condition	Standard Min.	Standard Typ.	Standard Max.	Unit
–	Resolution				8	Bits
–	Absolute accuracy				1.0	%
t_{su}	Setup time				3	μs
R_O	Output resistance		4	10	20	kΩ
I_{VREF}	Reference power supply input current	(Note 1)			1.5	mA

Note 1: This applies when using one D-A converter, with the D-A register for the unused D-A converter set to "00_{16}". The A-D converter's ladder resistance is not included.

Note 2: When the Vref is unconnected at the A-D control register, I_{VREF} is sent. When not using D-A converter, with the D-A register for the unused D-A converter set to "00_{16}", so that prevent dissipation of unnecessary reference power supply current.

Timing requirements

Referenced to V_{CC} = 5V, V_{SS} = 0V at Ta = -40°C to 85°C (85°C guaranteed version), or Ta = -40°C to 125°C (125°C guaranteed version) unless otherwise specified.

Table 1.26.6. External clock input

Symbol	Parameter	Standard		Unit
		Min.	Max.	
t_c	External clock input cycle time	62.5		ns
$t_{w(H)}$	External clock input HIGH pulse width	25		ns
$t_{w(L)}$	External clock input LOW pulse width	25		ns
t_r	External clock rise time		15	ns
t_f	External clock fall time		15	ns

Table 1.26.7. External interrupt $\overline{INTi}$ inputs

Symbol	Parameter	Standard		Unit
		Min.	Max.	
$t_{w(INH)}$	$\overline{INTi}$ input HIGH pulse width	250		ns
$t_{w(INL)}$	$\overline{INTi}$ input LOW pulse width	250		ns

Table 1.26.8. Timer A input (counter input in event counter mode)

Symbol	Parameter	Standard		Unit
		Min.	Max.	
$t_{c(TA)}$	TAi_{IN} input cycle time	150		ns
$t_{w(TAH)}$	TAi_{IN} input HIGH pulse width	60		ns
$t_{w(TAL)}$	TAi_{IN} input LOW pulse width	60		ns

Table 1.26.9. Timer A input (gating input in timer mode)

Symbol	Parameter	Standard		Unit
		Min.	Max.	
$t_{c(TA)}$	TAi_{IN} input cycle time	400		ns
$t_{w(TAH)}$	TAi_{IN} input HIGH pulse width	200		ns
$t_{w(TAL)}$	TAi_{IN} input LOW pulse width	200		ns

Table 1.26.10. Timer A input (external trigger input in one-shot timer mode)

Symbol	Parameter	Standard		Unit
		Min.	Max.	
$t_{c(TA)}$	TAi_{IN} input cycle time	200		ns
$t_{w(TAH)}$	TAi_{IN} input HIGH pulse width	100		ns
$t_{w(TAL)}$	TAi_{IN} input LOW pulse width	100		ns

Table 1.26.11. Timer A input (external trigger input in pulse width modulation mode)

Symbol	Parameter	Standard		Unit
		Min.	Max.	
$t_{w(TAH)}$	TAi_{IN} input HIGH pulse width	100		ns
$t_{w(TAL)}$	TAi_{IN} input LOW pulse width	100		ns

Table 1.26.12. Timer A input (up/down input in event counter mode)

Symbol	Parameter	Standard		Unit
		Min.	Max.	
$t_{c(UP)}$	TAi_{OUT} input cycle time	2000		ns
$t_{w(UPH)}$	TAi_{OUT} input HIGH pulse width	1000		ns
$t_{w(UPL)}$	TAi_{OUT} input LOW pulse width	1000		ns
$t_{su(UP-TIN)}$	TAi_{OUT} input setup time	400		ns
$t_{h(TIN-UP)}$	TAi_{OUT} input hold time	400		ns

Timing requirements

Referenced to V_{CC} = 5V, V_{SS} = 0V at Ta = -40°C to 85°C(85°C guaranteed version), or Ta = -40°C to 125°C(125°C guaranteed version) unless otherwise specified.

Table 1.26.13. Timer B input (counter input in event counter mode)

Symbol	Parameter	Standard		Unit
		Min.	Max.	
$t_{c(TB)}$	TBi_{IN} input cycle time (counted on one edge)	150		ns
$t_{w(TBH)}$	TBi_{IN} input HIGH pulse width (counted on one edge)	60		ns
$t_{w(TBL)}$	TBi_{IN} input LOW pulse width (counted on one edge)	60		ns
$t_{c(TB)}$	TBi_{IN} input cycle time (counted on both edges)	300		ns
$t_{w(TBH)}$	TBi_{IN} input HIGH pulse width (counted on both edges)	120		ns
$t_{w(TBL)}$	TBi_{IN} input LOW pulse width (counted on both edges)	120		ns

Table 1.26.14. Timer B input (pulse period measurement mode)

Symbol	Parameter	Standard		Unit
		Min.	Max.	
$t_{c(TB)}$	TBi_{IN} input cycle time	400		ns
$t_{w(TBH)}$	TBi_{IN} input HIGH pulse width	200		ns
$t_{w(TBL)}$	TBi_{IN} input LOW pulse width	200		ns

Table 1.26.15. Timer B input (pulse width measurement mode)

Symbol	Parameter	Standard		Unit
		Min.	Max.	
$t_{c(TB)}$	TBi_{IN} input cycle time	400		ns
$t_{w(TBH)}$	TBi_{IN} input HIGH pulse width	200		ns
$t_{w(TBL)}$	TBi_{IN} input LOW pulse width	200		ns

Table 1.26.16. Serial I/O

Symbol	Parameter		Standard		Unit
			Min.	Max.	
$t_{c(CK)}$	CLKi input cycle time		250		ns
$t_{w(CKH)}$	CLKi input HIGH pulse width		125		ns
$t_{w(CKL)}$	CLKi input LOW pulse width		125		ns
$t_{d(C-Q)}$	TxDi / S_{OUT}i output delay time			100	ns
$t_{h(C-Q)}$	TxDi / S_{OUT}i hold time		0		ns
$t_{su(D-C)}$	RxDi / S_{IN}i input setup time	When external clock is selected	45		ns
		When external clock is selected	120		ns
$t_{h(C-D)}$	RxDi / S_{IN}i input hold time	When external clock is selected	120		ns
		When external clock is selected	45		ns

Table 1.26.17. A-D trigger input

Symbol	Parameter	Standard		Unit
		Min.	Max.	
$t_{c(AD)}$	$\overline{AD_{TRG}}$ input cycle time (trigger able minimum)	1000		ns
$t_{w(ADL)}$	$\overline{AD_{TRG}}$ input LOW pulse width	125		ns

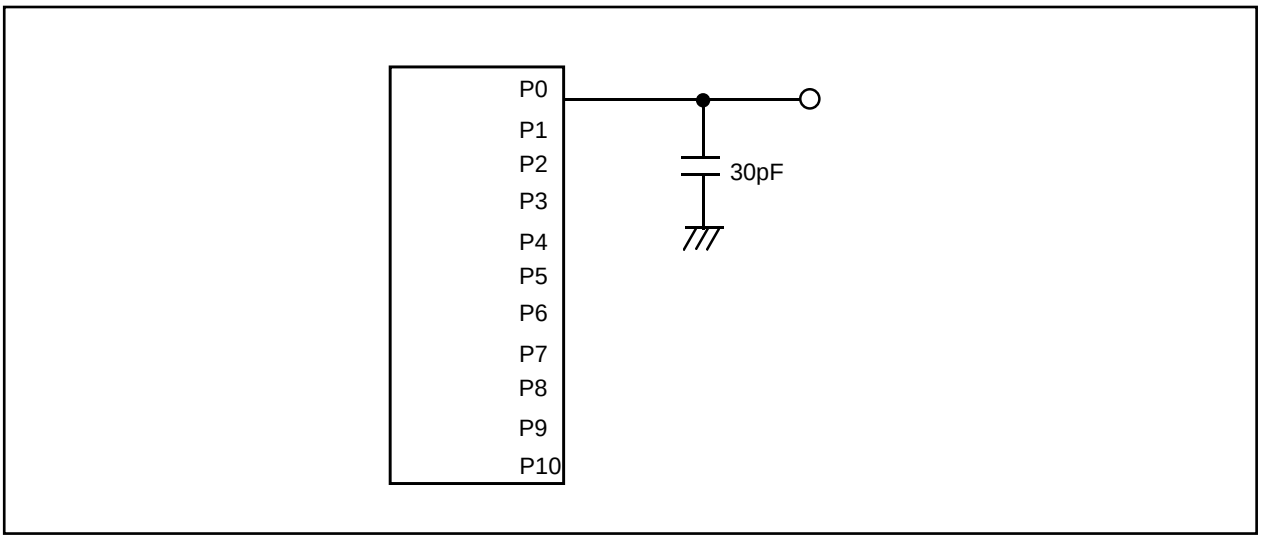

Figure 1.26.1. Port P0 to P10 measurement circuit

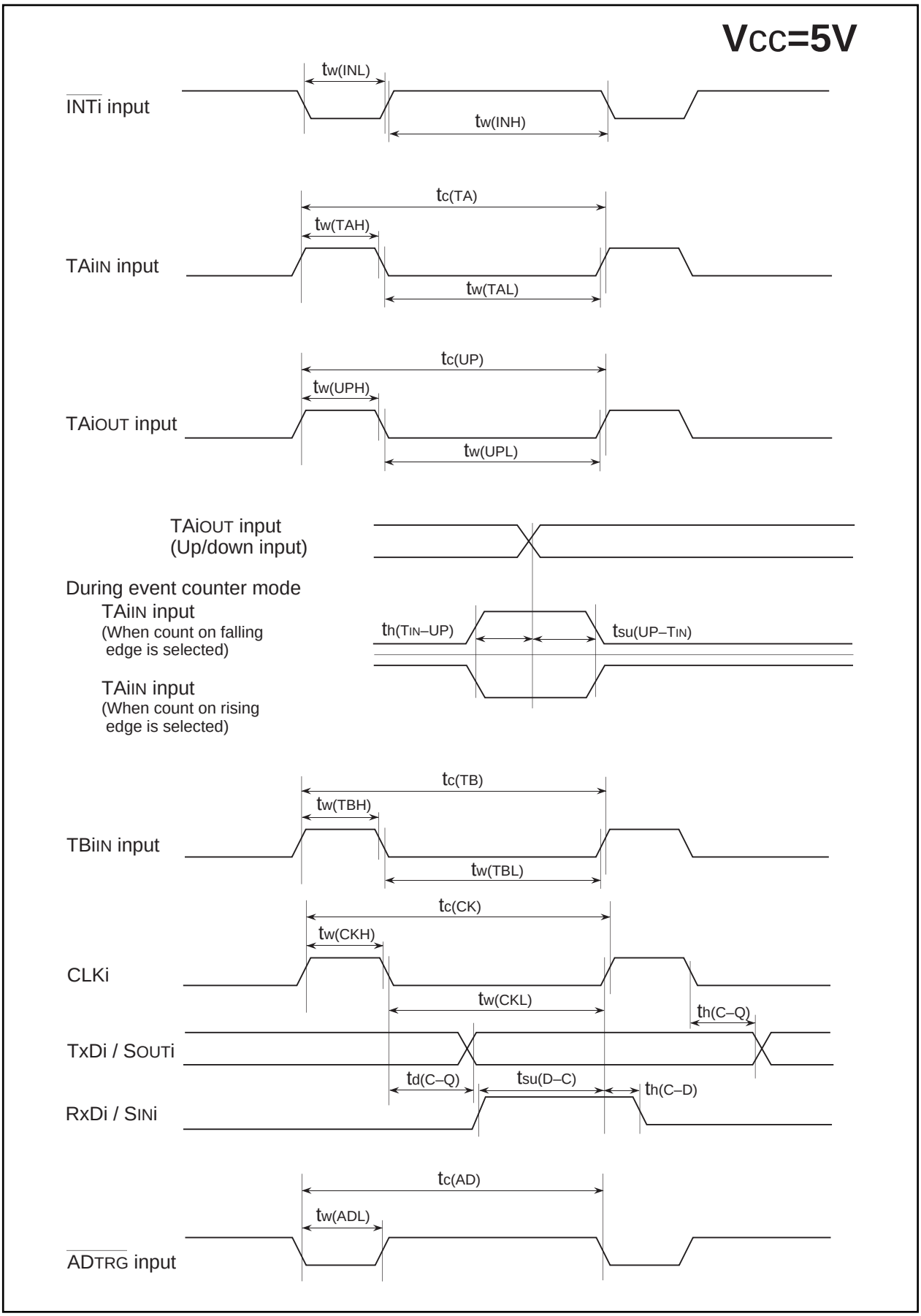

Figure 1.26.2. Timing

Differences between M16C/62T group and M16C/61T group

Group	M16C/62T group	M16C/61T group
Memory space (Note 1)	Memory expansion is possible 1.2M bytes mode 4M bytes mode	1M byte fixed
Timer B	6 channels	3 channels
Serial I/O	UART/clocked SI/O · · · · · 3 channel (80-pin package: One of exclusive UART) Clocked SI/O · · · · · · · · · · 2 channel (80-pin package: One of exclusive transmission)	UART/clocked SI/O · · · · · 3 channels (80-pin package: One of exclusive UART)
IIC bus mode	UART2 used IIC bus interface can be performed with software	Impossible
Port function	$P9_0$ · · · · · $TB0_{IN}$/CLK3 $P9_1$ · · · · · $TB1_{IN}$/S_{IN}3 $P9_2$ · · · · · $TB2_{IN}$/S_{OUT}3 $P9_3$ · · · · · $TB3_{IN}$/DA0 $P9_4$ · · · · · $TB4_{IN}$/DA1 $P9_5$ · · · · · ANEX0/CLK4 $P9_6$ · · · · · ANEX1/S_{OUT}4 $P9_7$ · · · · · AD_{TRG}/S_{IN}4 $P1_5$ · · · · · D13/INT3 (Note 2) $P1_6$ · · · · · D14/INT4 (Note 2) $P1_7$ · · · · · D15/INT5 (Note 2) $P7_1$ · · · · · R_xD_2/$TA0_{IN}$/$TB5_{IN}$	$P9_0$ · · · · · $TB0_{IN}$ $P9_1$ · · · · · $TB1_{IN}$ $P9_2$ · · · · · $TB2_{IN}$ $P9_3$ · · · · · DA0 $P9_4$ · · · · · DA1 $P9_5$ · · · · · ANEX0 $P9_6$ · · · · · ANEX1 $P9_7$ · · · · · AD_{TRG} $P1_5$ · · · · · D13 (Note 2) $P1_6$ · · · · · D14 (Note 2) $P1_7$ · · · · · D15 (Note 2) $P7_1$ · · · · · R_xD_2/$TA0_{IN}$
Interrupt cause	Internal 25 sources, External 8 sources (80-pin package: 5 sources), Software 4 sources (Added 2 Serial I/O, 3 timers and 3external interrupts (Note 2))	Internal 20 sources External 5 sources Software 4 sources
Chip select (Note 1) (Note 2)	M16C/61T type (wrinting the right) and the type as below can be switched (Besides 4M-byte mode is possible.) CS0 : 0400_{16} to $3FFFF_{16}$ (fetch) 4000_{16} to $FFFFF_{16}$ (data/facth) CS1 : 2800_{16} to $2FFFF_{16}$ (data) CS2 : 0800_{16} to $27FFF_{16}$ (data) CS3 : 0400_{16} to $07FFF_{16}$ (data)	CS0 : 3000_{16} to $FFFFF_{16}$ CS1 : 2800_{16} to $2FFFF_{16}$ CS2 : 0800_{16} to $27FFF_{16}$ CS3 : 0400_{16} to $07FFF_{16}$
Three-phase inverter control circuit (Note 2)	PWM output for three-phase inverter can be performed using timer A4, A1 and A2. Output port is arranged to $P7_2$ to $P7_5$, $P8_0$ and $P8_1$.	Impossible
Read port P1 (Note 2)	By setting to register, the state of port register can be read always.	The state of port when input mode. The state of port register when output mode.
$P4_4$/$\overline{CS0}$ - $P4_7$/$\overline{CS3}$ (Note 1) (Note 2)	If a Vcc level is applied to the CNVss pin, bit 2 (PU11) of pull-up control register 1 turns to "1" when reset, and $P4_4$/ $\overline{CS0}$ - $P4_7$/ $\overline{CS3}$ turn involved in pull-up.	Bit 2 (PU11) of the pull-up control register 1 turns to "0" when reset, and $P4_4$/ $\overline{CS0}$ - $P4_7$/ $\overline{CS3}$ turn free from pull-up.

Note 1: M16C/61T group, and M16C/62T group are not guaranteed operating of memory expansion, but it is mentioned in the table for clear the difference of capacity.

Note 2: In 80-pin package(M30613, M30623), pins of a part are not connected to the external pin, so do not use these functions and pins.

MITSUBISHI SEMICONDUCTORS
M16C/62T Group Tentative Specification REV.A

Jan First Edition 1999

Editioned by
Committee of editing of Mitsubishi Semiconductor

Published by
Mitsubishi Electric Corp., Kitaitami Works

This book, or parts thereof, may not be reproduced in any form without permission of Mitsubishi Electric Corporation.
©1999 MITSUBISHI ELECTRIC CORPORATION