SMT & THROUGH-HOLE BOARD STACKERS

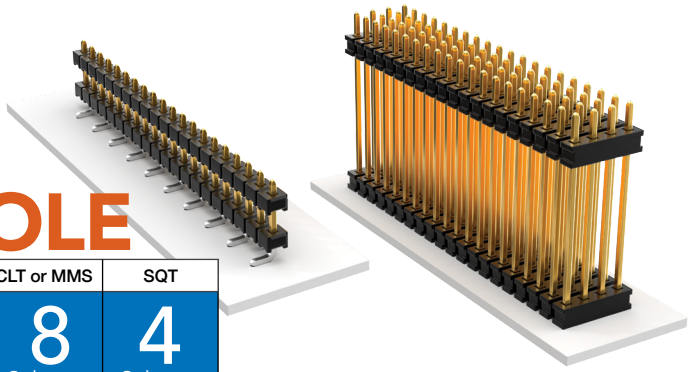

CLT or MMS	SQT
8 Gbps	4 Gbps

(2.00 mm) .0787" PITCH • TW SERIES

TW
Board Mates:
CLT, SQT, SQW, ESQT, TLE, SMM, MMS
Cable Mates:
TCSD

SPECIFICATIONS

Insulator Material:
Black Liquid Crystal Polymer
Terminal Material:
Phosphor Bronze
Plating:
Sn or Au over
50 µ" (1.27 µm) Ni
Operating Temp Range:
-55 °C to +105 °C with Tin;
-55 °C to +125 °C with Gold
Current Rating:
3.9 A per pin
(2 pins powered)
Voltage Rating:
350 VAC/495 VDC

PROCESSING

Lead–Free Solderable:
Yes
SMT Lead Coplanarity:
(0.15 mm) .006" max*
*(.004" stencil solution may be available; contact ipg@samtec.com)

ALSO AVAILABLE
Contact Samtec

Other Platings
End shrouds with or without guide post

Notes:
For added mechanical stability, Samtec recommends mechanical board spacers be used in applications with gold or selective gold plated connectors. Contact ipg@samtec.com for more information.

This Series is non-standard, non-returnable.

TW	–	NO. PINS PER ROW	–	LEAD STYLE	–	PLATING OPTION	–	ROW OPTION	–	STACKER HEIGHT	–	SM	–	OTHER OPTION
		02 thru 36		Specify LEAD STYLE from chart		–F = Gold flash on post, Matte Tin on tail –L = 10 µ" (0.25 µm) Gold on post, Matte Tin on tail –T = Matte Tin		–S = Single Row –D = Double Row		–"XXX" = Stacker Height in inches (0.13 mm) .005" increments Example: –250 = (6.35 mm) .250"				–"XXX" = Polarized Position –A = Alignment Pin (Metal or plastic at Samtec discretion) (4.83 mm) .190" min. board space (–D only) –P = Pick & Place Pad (1.91 mm) .075" min. post height (04-36 only) –"X"R Specify "T" for Tape & Reel Specify "F" for Full Reel Tape & Reel (must order max. quantity per reel; contact Samtec for quantity breaks) (–07 lead style N/A) (–06 lead style with –P option N/A as standard)

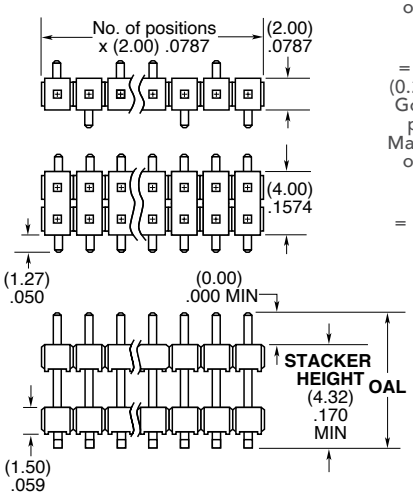

LEAD STYLE	OAL
–02	(7.85) .309
–03	(11.86) .467
–04	(12.37) .487
–06	(15.37) .605
–07	(17.35) .683
–09	(9.86) .388

ROW OPTION	A
–S	(5.08) .200
–D	(6.35) .250

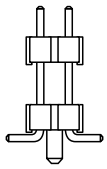

–A OPTION

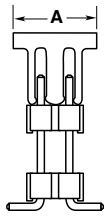

–P OPTION

TW	–	NO. PINS PER ROW	–	LEAD STYLE	–	PLATING OPTION	–	ROW OPTION	–	STACKER HEIGHT	–	TAIL SPEC
		02 thru 50		Specify LEAD STYLE from chart		–F = Gold flash on post, Matte Tin on tail –L = 10 µ" (0.25 µm) Gold on post, Matte Tin on tail –T = Matte Tin		–S = Single Row –D = Double Row –T = Triple Row –Q = Four Row –5 = Five Row –6 = Six Row		–"XXX" = Stacker Height in inches (0.13 mm) .005" increments Example: –250 = (6.35 mm) .250"		–"XXX" = Tail Length in inches (0.13 mm) .005" increments Example: -150 = (3.81 mm) .150" –"XXX" = Polarized Position (Specify position to be removed)

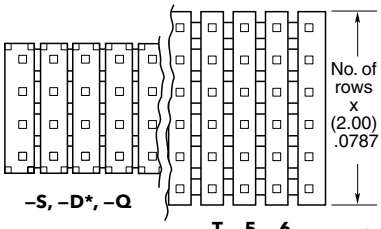

–S, –D*, –Q

–T, –5, –6

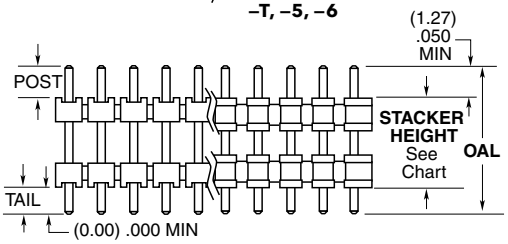

–S, –D*, –Q

–T, –5, –6

ROW OPTION	STACKER HEIGHT
–S, –D*, –Q	(3.05) .120 MIN
–T, –5, –6	(4.06) .160 MIN

*–D with stacker height greater than (4.06 mm) .160" will not have standoffs.

LEAD STYLE	OAL
–01	(8.20) .323
–02	(9.60) .377
–03	(13.60) .535
–04	(14.10) .555
–05	(15.10) .594
–06	(17.10) .673
–07	(19.10) .751
–08*	(21.10) .830
–09	(11.60) .456
–10	(15.60) .614
–11	(10.08) .397
–12*	(28.19)1.110

*Style –08 & –12 = S & D only

Unless otherwise approved in writing by Samtec, all parts and components are designed and built according to Samtec's specifications which are subject to change without notice.