THIS DRAWING IS UNPUBLISHED. RELEASED FOR PUBLICATION 2010
© COPYRIGHT 2010 BY TYCO ELECTRONICS CORPORATION. ALL RIGHTS RESERVED.

LOC	DIST
E	B

REVISIONS

P	LTR	DESCRIPTION	DATE	DWN	APVD
	BA	NEW RELEASE	05AUG2010	PT	St.P

FOR FURTHER INFORMATION SEE DATA SHEET FOR
SERIES SC - AXIAL LEADED POWER INDUCTORS

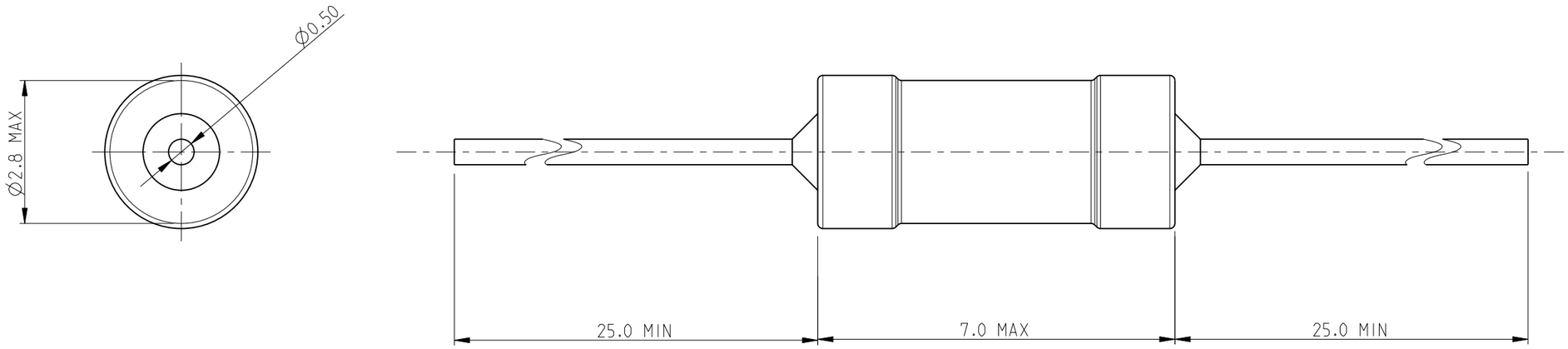

RoHS Compliant

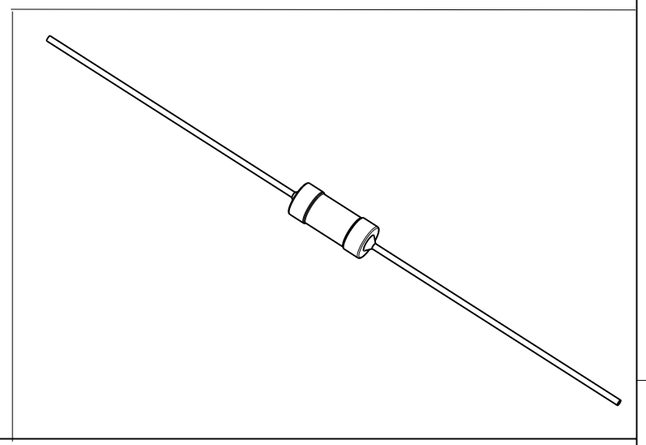

THIS DRAWING IS A CONTROLLED DOCUMENT FOR TYCO ELECTRONICS CORPORATION
IT IS SUBJECT TO CHANGE AND THE CONTROLLING ENGINEERING ORGANIZATION
SHOULD BE CONTACTED FOR THE LATEST REVISION.

DIMENSIONS: mm

TOLERANCES UNLESS OTHERWISE SPECIFIED:

0 PLC	±0.2
1 PLC	±0.1
2 PLC	±-
3 PLC	±-
4 PLC	±-
ANGLES	±5°

MATERIAL –

FINISH –

DWN PARUSURAM.T 05AUG2010
CHK ALLAN.P 05AUG2010
APVD STEPHEN.P 05AUG2010
PRODUCT SPEC –
APPLICATION SPEC –
WEIGHT –

Tyco Electronics

Tyco Electronics Corporation
Dorcan, Swindon, SN3 5HH

NAME
AXIAL LEADED POWER INDUCTORS
SERIES SC30

SIZE	CAGE CODE	DRAWING NO	RESTRICTED TO
A3	00779	C-1624024	–

CUSTOMER DRAWING

SCALE 10:1 SHEET 1 OF 1 REV BA

AMP 1470-19 REV 31MAR2000

Pro/ENGINEER DRAWING