© 2020 TE Connectivity. All Rights Reserved.

REVISIONS					
P	LTR	DESCRIPTION	DATE	DWN	APVD
	A7	PNs and design 2 added	21DEC2011	L. Kirschbaum	M. Schuster
	A8	PNs added	06NOV2013	L. Kirschbaum	M. Merz
	A9	ECR-15-012070	13AUG2015	JBJH	BK
	A10	Clarification of Serrations amount for PN 964292 and PN 964298.	25MAR2020	FRAN	MERZ

CONTACTS FOR FLR-CABLE
Kontakte fuer FLR-Leitung

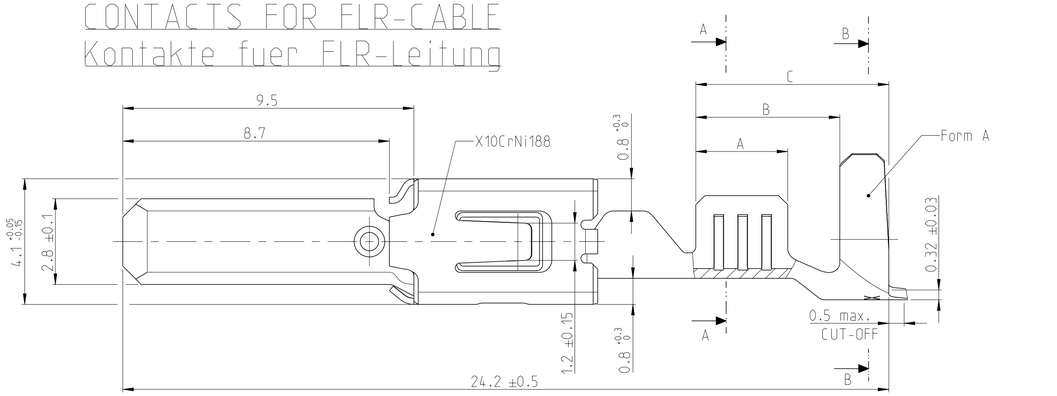

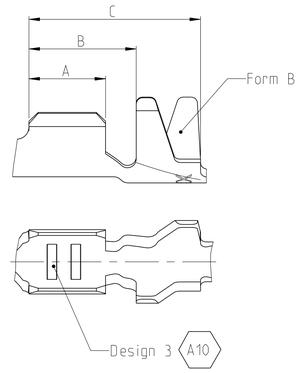

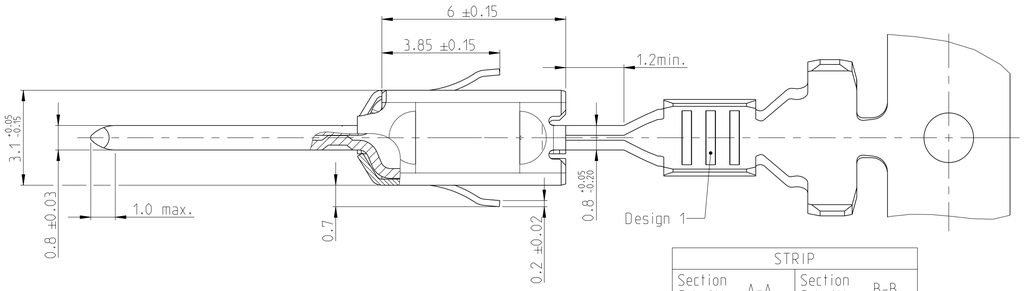

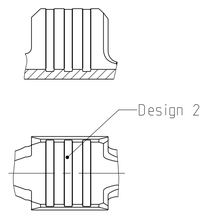

STRIP	
Section A-A Schnitt	Section B-B Schnitt
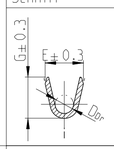	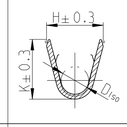

Order No. BESTELL - Nr. Strip BANDWARE	Rev.	Design Serrations	Wire Range Drahtgroessen Bereich (mm 2)	Insulation ⌀ Isolations ⌀ (mm)	Material Werkstoff	Surface Oberflaeche	Lenght Laenge	Wire crimp Drahtcrimp	Insul.crimp Iso crimp	
							Crimp Dimension Crimpabmessungen (mm)			
2-964302-2	A	1	>1.0-2.5	2.2-3.0	CuFe 2	3	A = 3.5 B = 5.2 C = 6.8	E = 3.6 G = 3.8 D_{DR} = 1.8	H = 5.3 K = 5.0 D_{ISO} = 3.5	Single wire sealing system EDS 2
2-964302-1	C				CuFe 2	vorverzinnt				
1-964302-3	C				CuSn 4	1				
4-964300-1	A	1	0.5-1.0	1.4-2.7	CuNi18Zn20		A = 3.0 B = 4.7 C = 6.3	E = 2.5 G = 2.7 D_{DR} = 1.2	H = 5.1 K = 4.8 D_{ISO} = 3.3	
2-964300-2	A				CuFe 2	3				
2-964300-1	C				CuFe 2	vorverzinnt				
1-964300-3	C				CuSn 4	1				
2-2141876-2	A	2	0.35	3.4	CuFe 2	3	A = 2.5 B = 4.7 C = 6.3	E = 2.4 G = 2.3 D_{DR} = 1.0	H = 4.7 K = 4.5 D_{ISO} = 3.2	
2-2141876-1	A				CuFe 2	vorverzinnt				
1-2141876-3	A				CuSn 4	1				
2-964298-1	C	3 A10	0.2-0.5	1.2-2.3	CuFe 2	vorverzinnt	A = 2.5 B = 4.7 C = 6.3	E = 2.1 G = 2.1 D_{DR} = 0.8	H = 4.7 K = 4.5 D_{ISO} = 3.2	
1-964298-3	C				CuSn 4	1				
2-964296-2	B	1	>1.0-2.5	2.2-3.0	CuFe 2	3	A = 3.3 B = 4.3 C = 5.8	E = 3.6 G = 3.8 D_{DR} = 1.8	H = 4.7 K = 4.9 D_{ISO} = 2.6 Form A	FLR - Cable / Leitung
2-964296-1	C				CuFe 2	vorverzinnt				
1-964296-3	C				CuSn 4	1				
2-964294-2	A	1	0.5-1.0	1.4-2.1	CuFe 2	3	A = 3.0 B = 4.0 C = 5.5	E = 2.5 G = 2.7 D_{DR} = 1.2	H = 3.7 K = 3.9 D_{ISO} = 1.8 Form A	
2-964294-1	B				CuFe 2	vorverzinnt				
1-964294-3	B				CuSn 4	1				
2-2141874-1	A	2	0.35	1.15-1.6	CuFe 2	vorverzinnt	A = 2.5 B = 3.5 C = 5.6	E = 2.4 G = 2.3 D_{DR} = 1.0	H = 2.7 K = 2.8 D_{ISO} = 1.4 Form B	
1-2141874-3	A				CuSn 4	1				
2-964292-1	B	3 A10	0.2-0.5	1.15-1.6	CuFe 2	vorverzinnt	A = 2.5 B = 3.5 C = 5.6	E = 2.1 G = 2.1 D_{DR} = 0.8	H = 2.7 K = 2.8 D_{ISO} = 1.4 Form B	
1-964292-3	B				CuSn 4	1				

Contacts for
Single Wire Sealing System: FLR-and FLK-Cable
Kontakt fuer Einzel-Dichtung-System: FLR und FLK-Leitung
Dimensions see Figure Contacts for FLR - Cable
Masse siehe Darstellung der Kontakte fuer FLR-Leitung

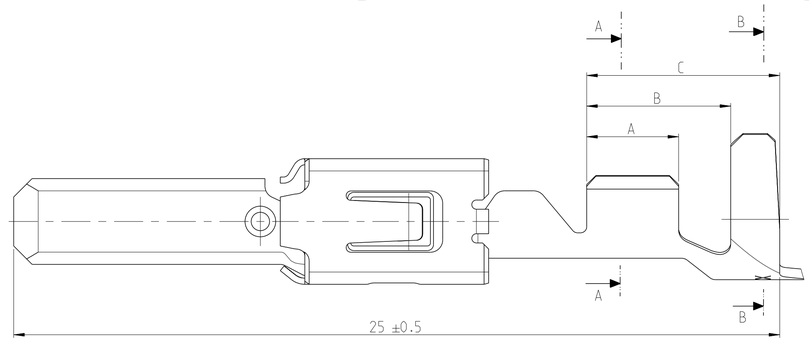

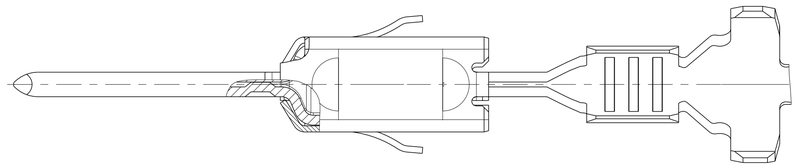

SINGLE WIRE SEAL Einzel-Dichtung 2		
963292-1	2.7-3.0	yellow gelb
963293-1	2.0-2.7	redbrown rotbraun
963294-1	1.2-2.1	blue blau
ORDER NO. Bestell-Nr.	Insulation ⌀ Isolations ⌀	Colour Farbe

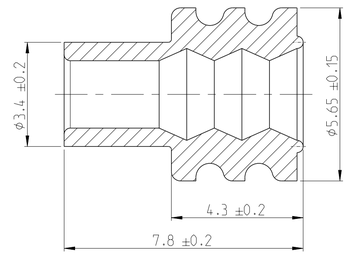

NOTES
Bemerkungen:

1. BODY ELECTRO TIN PLATED OVER NICKEL 0.2 µm MIN.
   CONTACT AREA SELECTIVE GOLD OVER NICKEL 0.8 µm MIN.
   WIRE CRIMP AREA ELECTRO TIN PLATED 1 µm MIN. OVER NICKEL
   Kontaktkoerper gal. verzinnt ueber Nickel 0.2 µm min.
   Kontaktzone selectiv vergoldet ueber Nickel 0.8 µm min.
   Drahtcrimpbereich gal. verzinnt 1 µm min. ueber Nickel

2. ACCORDING INSULATION ⌀ IS TO CHOOSE THE SINGLE WIRE SEAL
   Entsprechend dem Isolationsdurchmesser ist die Einzel-Dichtung auszuwaehlen

3. CONTACT AREA MIN. 3 µm PRE-SILVER PLATED
   Kontaktzone min. 3 µm vorversilbert

THIS DRAWING IS A CONTROLLED DOCUMENT.
DIESE ZEICHNUNG IST EIN KONTROLLIERTES DOKUMENT

DIMENSIONS: MASSEEINHEITEN: mm

TOLERANCES UNLESS OTHERWISE SPECIFIED: ALLGEMEINTOLERANZEN
0 PLC ±0.2 mm
1 PLC ±
2 PLC ±
3 PLC ±
4 PLC ±
ANGLES ±

MATERIAL - -

FINISH/OBERFLAECHE/FARBE - -

DWN	Abraham, G.	05NOV2001
CHK	Meierhofer, T.	05NOV2001
APVD	Bleicher, M.	05NOV2001
PRODUCT SPEC	108-18063	
APPLICATION SPEC	114-18051	
WEIGHT	-	

TE Connectivity

NAME: PRODUCT GROUP DRAWING TAB 2.8 x 0.8 MM TYPE A
Produkt-Gruppen-Zeichnung Flachstecker 2.8 x 0.8 mm Typ A

SIZE	CAGE CODE	DRAWING NO	RESTRICTED TO
A	00779	C-1355364	

CUSTOMER DRAWING / KUNDENZEICHNUNG

SCALE	SHEET	OF	REV
10:1	1	1	A10

4805 (3/13)