Feb.1.2018 Copyright 2018 HIROSE ELECTRIC CO., LTD. All Rights Reserved.

	COUNT	DESCRIPTION OF REVISIONS	BY	CHKD	DATE		COUNT	DESCRIPTION OF REVISIONS	BY	CHKD	DATE
△					. .	△					. .
△					. .	△					. .
△					. .	△					. .

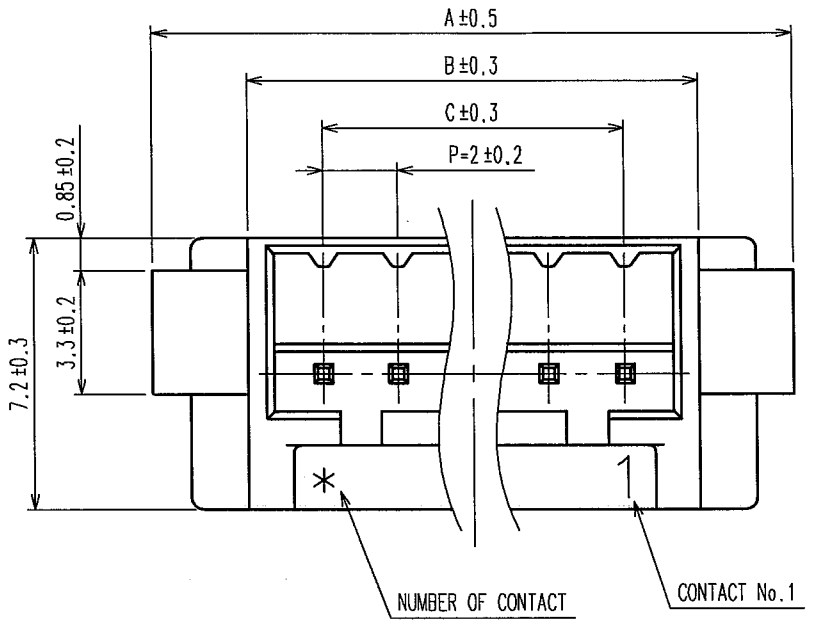

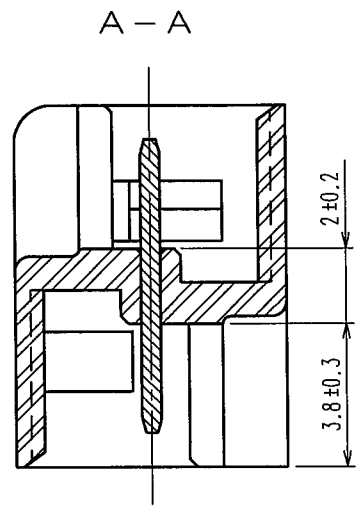

CODE No.	PART No.	CONTACTS	A	B	C	D	E
CL543-0267-0	DF3- 2EP-2A	2	11	6	2	9.4	6.3
CL543-0268-2	DF3- 3EP-2A	3	13	8	4	11.4	8.3
CL543-0269-5	DF3- 4EP-2A	4	15	10	6	13.4	10.3
CL543-0270-4	DF3- 5EP-2A	5	17	12	8	15.4	12.3
CL543-0271-7	DF3- 6EP-2A	6	19	14	10	17.4	14.3
CL543-0272-0	DF3- 7EP-2A	7	21	16	12	19.4	16.3
CL543-0273-2	DF3- 8EP-2A	8	23	18	14	21.4	18.3
CL543-0274-5	DF3- 9EP-2A	9	25	20	16	23.4	20.3
CL543-0275-8	DF3-10EP-2A	10	27	22	18	25.4	22.3
CL543-0276-0	DF3-11EP-2A	11	29	24	20	27.4	24.3
CL543-0277-3	DF3-12EP-2A	12	31	26	22	29.4	26.3
CL543-0278-6	DF3-13EP-2A	13	33	28	24	31.4	28.3
CL543-0279-9	DF3-14EP-2A	14	35	30	26	33.4	30.3
CL543-0280-8	DF3-15EP-2A	15	37	32	28	35.4	32.3

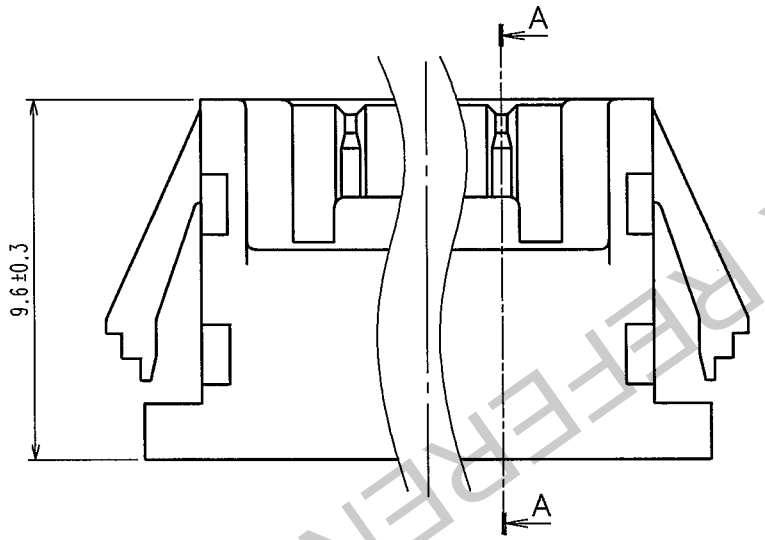

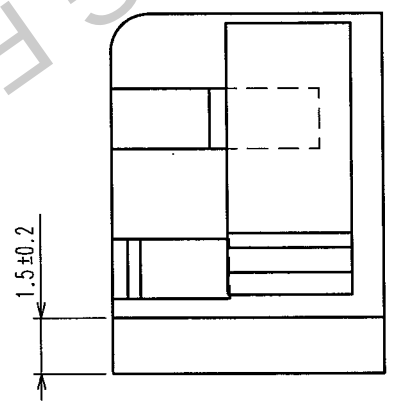

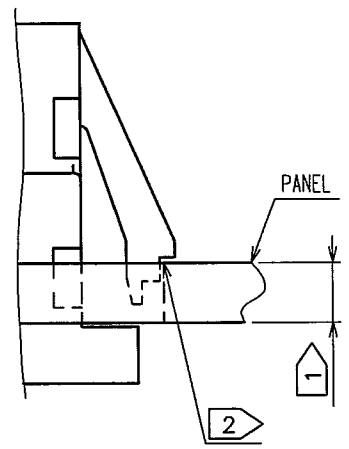

PANEL CUTOUT DIMENSIONS(2:1)

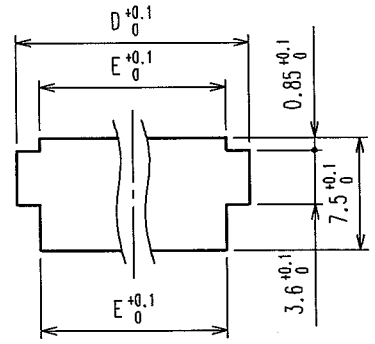

NOTE 1 APPLICABLE PANEL THICKNESS : 1.6～0.8mm
(NOTE THAT SOME LOOSENESS IS UNAVOIDABLE WHEN THE PLUGS ARE MOUNTED ON A PANEL OF OTHER THAN 1.6 OR 2.2mm THICKNESS.)
2 USE THE SHARP EDGE FOR ENGAGEMENT WITH THE PANEL.

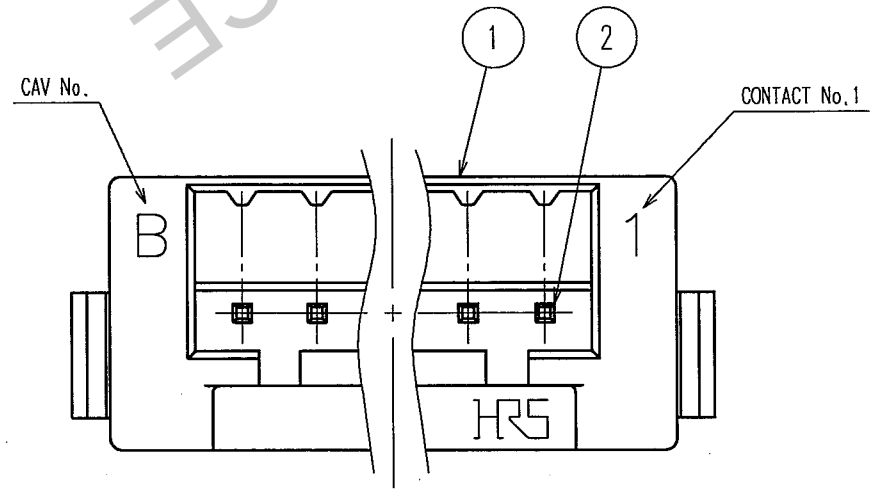

NO.	MATERIAL	FINISH, REMARKS	NO.	MATERIAL	FINISH, REMARKS
1	POLYAMIDE	UL94V-0,BLACK	2	BRASS	SURFACE:TIN PLATING 1μm min UNDER PLATING:NICKEL PLATED 0.5μm min

CODE NO.(OLD)	DRAWN	DESIGNED	CHECKED	APPROVED	RELEASED
CL	I.Denkouya '04.03.08	I.Denkouya '04.03.08	T.Miyazaki '04.03.08	T.Ona 04.03.09	. .

SCALE 5:1	DRAWING NO. EDC3-306189-01	PART NO. DF3-*EP-2A
UNITS mm	HRS HIROSE ELECTRIC CO., LTD	CODE NO. CL543- 1/1

FORM NO.229

TO

NOT FOR DRAWING FOR REFERENCE