LS-Series Rocker Switches

The LS-Series Softspot illuminated rocker switches feature a three-color high brightness light sequence, from a single lamp. These switches are designed with a standard nylon snap-in bracket and "Drip-Dry" construction that protects the front panel from dust and moisture, and are ideal for Marine and Transportation industry applications.

Dielectric Strength
1000V - live to dead metal parts
Electrical Life
50,000 cycles- maintained
25,000 cycles- momentary
Mechanical Life
100,000 cycles
Operating Temperature
0°F to 150°F (-17.8°C to +65.6°C)

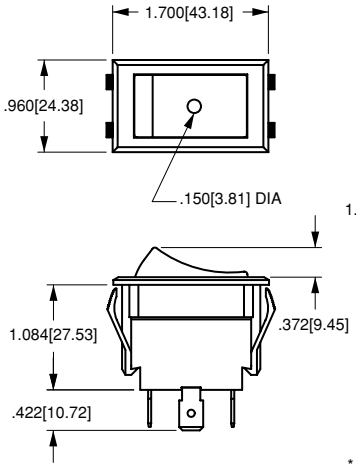

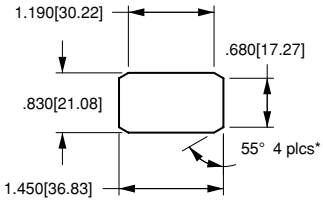

MOUNTING HOLE
(Nylon Snap-in Brackets)
Panel Thickness:
.040 min. - .250 max.
Switch should be mounted at 90° for maximum water shedding
(45° to 90° acceptable)

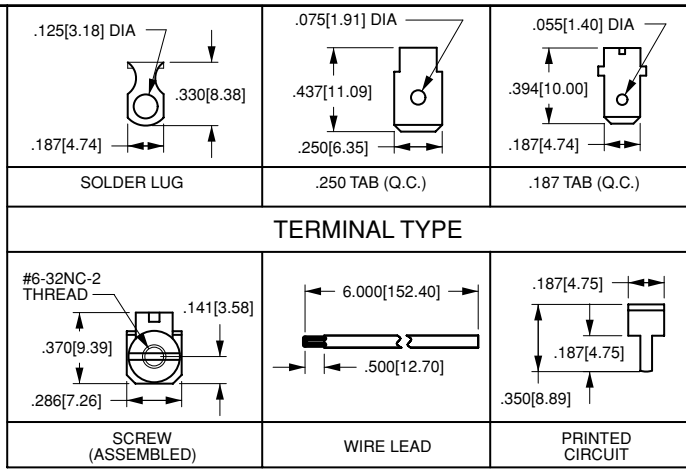

* Angled corners are suggested for optimum fit.
Standard rectangular cutout is acceptable.

LS1511 - 13 - BL - BL - 012

1 Base Part Number — 2 Lighting Sequence — 3 Actuator Color — 4 Base Color — 5 Lamp Voltage

1 BASE PART NUMBER: SERIES/POLES/ILLUMINATION/CIRCUITRY[2]/RATING/TERMINATION[3]

10A 250VAC, 15A 125VAC, 3/4 HP 125-250VAC, 15A 15-28VDC

Single Pole	*solder lug*	*.250 tab*	*screw term.*	*wire leads*
ON-NONE-OFF	**LS1510**	**LS1511**	**LS1514**	**LS1515**
ON-NONE-(OFF)	**LS1520**	**LS1521**	**LS1524**	**LS1525**
(ON)-NONE-OFF	**LS1530**	**LS1531**	**LS1534**	**LS1535**
ON-NONE-ON	**LS1540**	**LS1541**	**LS1544**	**LS1545**
ON-NONE-(ON)	**LS1550**	**LS1551**	**LS1554**	**LS1555**
ON-OFF-ON	**LS1560**	**LS1561**	**LS1564**	**LS1565**
ON--OFF-(ON)	**LS1570**	**LS1571**	**LS1574**	**LS1575**
(ON)-OFF-(ON)	**LS1580**	**LS1581**	**LS1584**	**LS1585**

2 LIGHTING SEQUENCE[1,2]

	position 1	***position 2***	***position 3***
01	red	red	red
02	amber	amber	amber
03	green	green	green
10	red	---	none
11	red	clear	red
12	red	clear	amber
13	red	clear	green
14	red	clear	blue
15	red	clear	clear
20	amber	---	none
21	amber	clear	red
22	amber	clear	amber
23	amber	clear	green
24	amber	clear	blue
25	amber	clear	clear
30	green	---	none
31	green	clear	red
32	green	clear	amber
33	green	clear	green
34	green	clear	blue
35	green	clear	clear
40	blue	---	none
41	blue	clear	red
42	blue	clear	amber
43	blue	clear	green
44	blue	clear	blue
45	blue	clear	clear
50	clear	---	none
51	clear	clear	red
52	clear	clear	amber
53	clear	clear	green
54	clear	clear	blue
55	clear	clear	clear

3 ACTUATOR COLOR[4]

BL black
WH white

4 BASE COLOR[4]

BL black
WH white

5 LAMP VOLTAGE[2]

neon
125 125 volts neon
250 250 volts
incandescent
006 6 volts
012 12 volts
018 18 volts
024 24 volts

NOTES
1 Independent lamp is standard. Dependent lamp with ON-OFF function (including momentary) is available with Lighting Sequences 10, 20, 30, 40 and 50. (No light in OFF position.)
2 Green and blue not recommended with 125 volt or 250 volt neon lamps.
3 Additional terminations available. Consult factory.
4 Custom colors available. Consult factory.
( ) Indicates momentary function.