TL-11G Tension Latch L Style

Model No.	A	B	Tightening Force N(kgf)	Net Weight(g)	Code No.
TL-11G-1	t1.6	t1.6	Approx.167(17)	41.5	1030
TL-11G-2	t1.5	t1.5	Approx.137(14)	42.0	1045

■Parts List

No.	Part Name	TL-11G-1		TL-11G-2		Quantity
		Material	Finish	Material	Finish	
1	Lever	SPCC	——	SUS304	Barrel Polishing	1
2	Base					1
3	Arm(A)					2
4	Arm(B)					1
5	Arm(C)					1
6	Pin	SWRM			——	1
7	Spring	SWP			Barrel Polishing	2
8	Keeper	SPCC				1

■Characteristic

Can be mounted in corner part of an object. An excellent vibration-free performance by its spring.

■Application

Measuring instruments / Machine tools

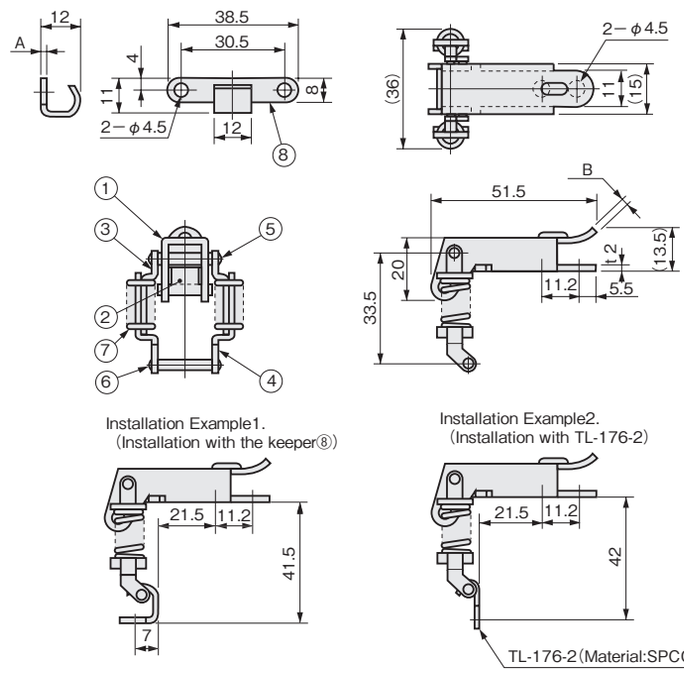

TL-322 Tension Latch

■Parts List

No.	Part Name	Material	Finish	Quantity
1	Lever	SUS304	Barrel Polishing	1
2	Base			1
3	Shaft(A)	SUS		2
4	Shaft(B)	SUS304	——	1
5	Spring			2
6	Arm(A)		Barrel Polishing	2
7	Arm(B)			1
8	Arm(C)			1
9	Slide			1
10	Stopper Pin	SUS303	——	1
11	Keeper	SUS304	Barrel Polishing	1

■Characteristic

The locking mechanism prevents the latch opening from vibration.

■Application

Distribution panels / Control boards / Distribution boards / Measuring instruments, etc.

■Note

The attaching surface side should be deburred when using countersunk screws or rivets.

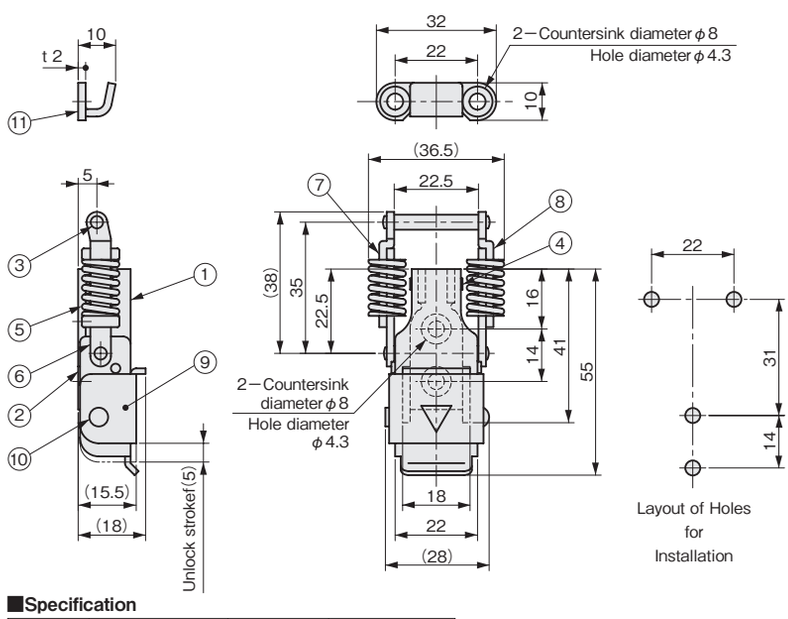

■Specification

Model No.	Tightening Force N(kgf)	Net Weight(g)	Code No.
TL-322	Approx.138(14)	75	1159