PRODUCT NUMBER	ROW	1	2	3	4	5	6	7	8	9	10	11	12	13	14	15	16	17	18	19	20	21	22	23	24	25	26	27	28	29	30	31	32
75860–X01	a	X	X	X	X	X	X	X	X	X	X	X	X	X	X	X	X	X	X	X	X	X	X	X	X	X	X	X	X	X	X	X	X
	b																																
	c	X	X	X	X	X	X	X	X	X	X	X	X	X	X	X	X	X	X	X	X	X	X	X	X	X	X	X	X	X	X	X	X
75860–X02	a	X	X	X	X	X	X	X	X	X	X	X	X	X	X	X	X	X	X	X	X	X	X	X	X	X	X	X	X	X	X	X	X
	b	X	X	X	X	X	X	X	X	X	X	X	X	X	X	X	X	X	X	X	X	X	X	X	X	X	X	X	X	X	X	X	X
	c																																

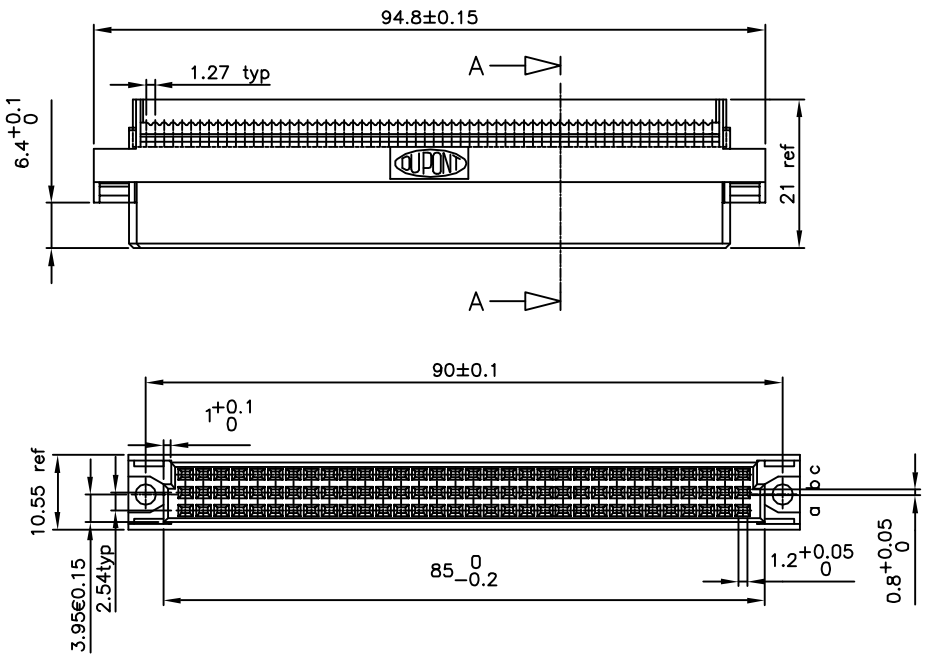

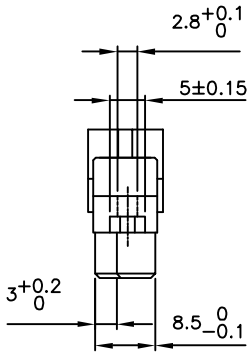

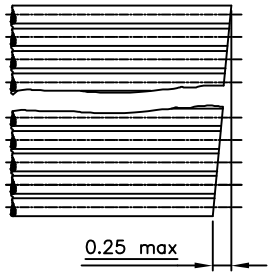

CABLE
scale 5:1

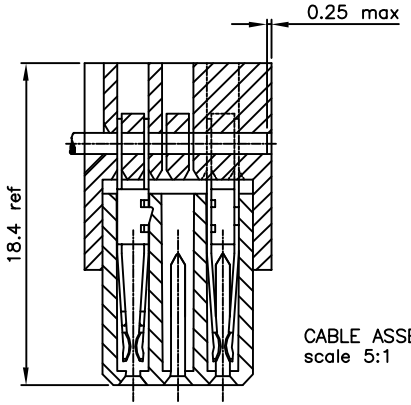

CABLE ASSEMBLY
scale 5:1

SECTION A–A
after piercing

NOTE:-

1. THE "LF" PRODUCTS MEET EUROPEAN UNION DIRECTIVES AND OTHER COUNTRY REGULATIONS AS DESCRIBED IN GS-22-008.
2. LEAD FREE OR RoHS DIRECTIVE LABELLING TO BE PROVIDED AS PER GS-14-920 FOR LEAD FREE VERSION.

NOTES:

1. MATERIAL HOUSING: THERMOPLASTIC POLYESTER 30% GLASS FILLED, FLAME RETARDANT PER UL–94–V0
   COLOUR HOUSING: GREY, COLOUR COVER: BLACK
2. MATERIAL CONTACT: PHOSPHOR BRONZE
3. CAN BE MATED WITH 3 ROW MALE CONNECTOR CONFORM DIN 41612 – FORM C
4. "LF" SUFFIX TO THE PRODUCT NUMBER FOR LEAD FREE OR RoHS COMPATIBLE PRODUCTS.
5. PIERCE AREA PLATING SPEC: 0.1–0.2umNi

Part Number	Performance Class
75860–4YY	2.0um Aumin over 3um Ni in contact area
75860–0YY	3.0um Aumin over 3um Ni in contact area
75860–1YY	DIN 41612 CLASS 1
75860–2YY	DIN 41612 CLASS 2

ltr	ecn no	dr	date
K	H20166	MVI	1992–03–31
L	I05–0123	MINI	2005–07–27
M	I06–0082	MINI	2006–08–01
N	I08–0078	JOHN	2008–06–25

mat'l. code: see table
surface: ISO 1302
tolerance: ISO 406 ISO 1101
tolerances unless otherwise specified: angles / linear
projection
mm
scale –

dr	M. Visschers	1992–03–31
engr	KESAVAN R	2008–06–25
chr	KESAVAN R	2008–06–25
appd	KESAVAN R	2008–06–25

product family: BACKPANEL
title: QUICKIE Female 64 Pos. P.L. ASSEMBLY
dwg no: 75860
sheet 1 of 1
size: A2
type: CUSTOMER Drawing

sheet index | revision sheet | N 1

form: A2

Copyright FCI
FCIconnect.com

PDM: Rev:N STATUS: Released Printed: May 14, 2011