THIS DRAWING IS UNPUBLISHED. RELEASED FOR PUBLICATION SEP ,2004.
© COPYRIGHT 2004 By – ALL RIGHTS RESERVED.

LOC	DIST
E	B

REVISIONS

P	LTR	DESCRIPTION	DATE	DWN	APVD
	D1	REVISED PER ECO-11-005033	01APR11	RK	HMR
	E	REVISED PER ECO-11-021675	02NOV11	TITAN	MARTIN

NOTES

1. 100 TRAY PACK IN ACCORDANCE WITH AMP SPEC 107-3275
2. SINGLE PACK IN ACCORDANCE WITH AMP SPEC 107-3275
3. 1.27um TIN PLATING OVER 0.76um Cu PLATING
4. 1.27um Ni PLATING OVER 0.76um Cu PLATING
5. FOR TECHNICAL DATA REFER TO YOUR LOCAL TE CONNECTIVITY SALES OFFICE
6. ALL DIMENSIONS ARE NOMINAL FOR REFERENCE ONLY UNLESS OTHERWISE STATED

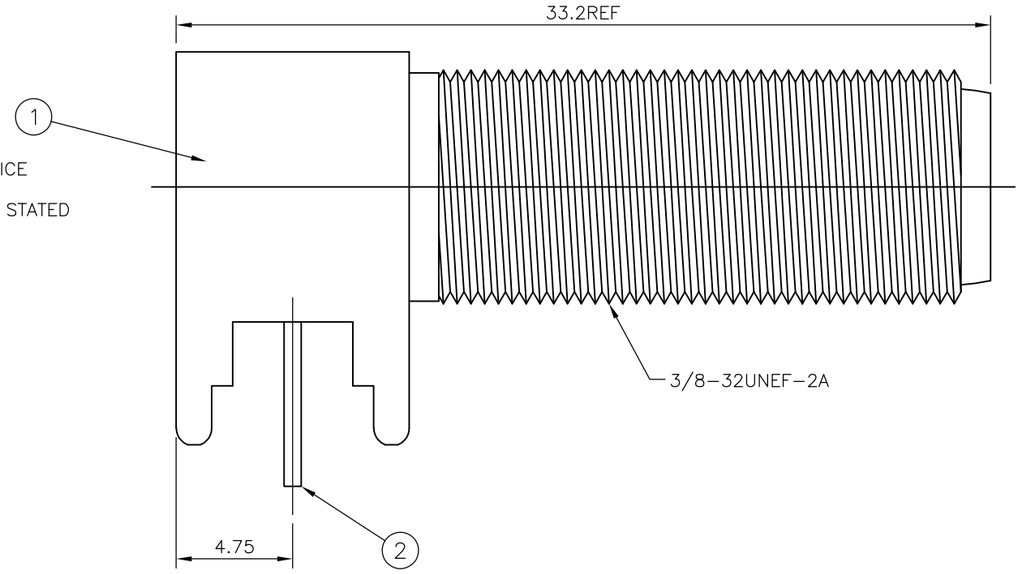

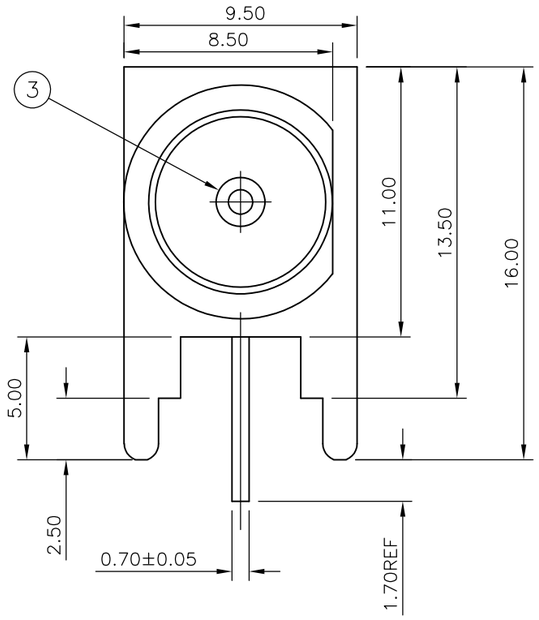

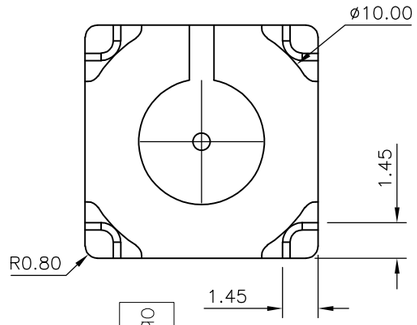

RECOMMENDED PCB LAYOUT WITH MOUNTING POSTS

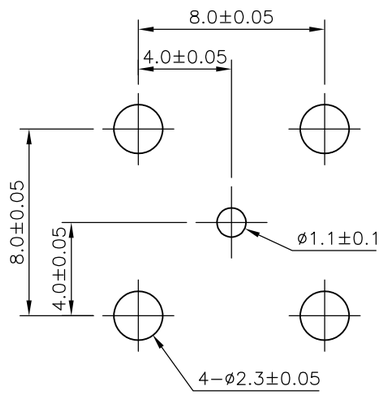

RECOMMENDED MOUNTING HOLE

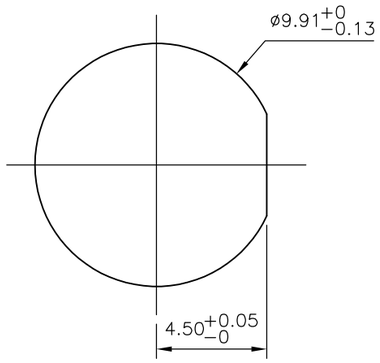

QUANTITY PER ASSY									PARTS LIST		
							Obsolete				
						1		1	TPX	INSULATOR	3
						1		1	PHOS BRONZE 3	CONTACT	2
						1		1	ZINC ALLOY 4	BODY	1
						5--1		5--0	MATERIAL	DESCRIPTION	ITEM
						2		1			

THIS DRAWING IS A CONTROLLED DOCUMENT.

DIMENSIONS: mm

TOLERANCES UNLESS OTHERWISE SPECIFIED:

0 PLC	± 0.5
1 PLC	± 0.3
2 PLC	± 0.2
3 PLC	± –
4 PLC	± –
ANGLES	± –

MATERIAL: SEE TABLE

FINISH: SEE TABLE

DWN ANSON MA 14FEB09
CHK RITA ZUO 14FEB09
APVD BOB ZHAO 14FEB09
PRODUCT SPEC 108-112000
APPLICATION SPEC —
WEIGHT —

TE Connectivity

NAME: F SERIES CONNECTOR ELBOW JACK PCB EXTENDED
—
—

SIZE	CAGE CODE	DRAWING NO	RESTRICTED TO
A3	00779	C-1634552	—

CUSTOMER DRAWING | SCALE NTS | SHEET 1 OF 1 | REV E