DWG. NO.
SE66466

CATALOG NO.	BOEING PART NO.	FIGURE	ØA	ØB	ØC	D	E	F°	G_	H	WIRE SIZE RANGE	INSULATION DIA. RANGE (3)	COLOR CODE	FINISH (2)	MATERIAL (1)	TOOLING	MAX. WT. (g)
YHMM16-1F50	BACC47DE1	1	.065 [1.65]	.111 [2.82]	.040 [1.02]	.330 [8.38]	.085 [2.16]	30	.263 [6.68]	.130 [3.30]	16-20	.080-.110 [2.03-2.79]	--	SILVER (2a)	BRASS (1a)	M10S HYTOOL S1 DIE SET SL-53 STOP BUSHING	.556
YHMM16-3F50	----	3	.065 [1.65]	.084 [2.13]						.102 [2.59]	16-20	.067-.083 [1.70-2.11]	BLUE				.601
YHMM16-4F50	BACC47DE5	3	.060 [1.52]	.084 [2.13]						.102 [2.59]	16-20	.063-.083 [1.60-2.11]	RED				---
YHMM18-2F50	BACC47DE6	2	.054 [1.37]	.070 [1.78]					.249 [6.32]	.086 [2.18]	18-20	.056-.069 [1.42-1.75]	BLACK				---
YHMM20-1F50	----	2	.044 [1.12]	.066 [1.68]	.028 [0.71]	.321 [8.15]	.094 [2.39]		.263 [6.68]	.080 [2.03]	20-22	.047-.065 [1.19-1.65]	RED				.700
YHMM24-1F50	BACC47DE8	5	.029 [0.74]	.046 [1.17]	.024 [0.61]				.249 [6.32]	.100 [2.54]	24	.032-.045 [0.81-1.14]	GREEN				---
YHMM16-5D88	----	3	.060 [1.52]	.084 [2.13]	.040 [1.02]	.330 [8.38]	.085 [2.16]		.263 [6.68]	.102 [2.59]	16-20	.063-.083 [1.60-2.11]	BLUE	GOLD OVER COPPER (2b)			---
YHMM20-2D88	BACC47DE7	2	.044 [1.12]	.066 [1.68]	.028 [0.71]	.321 [8.15]	.094 [2.39]			.080 [2.03]	20-22	.047-.065 [1.19-1.65]	RED				.700
YHMM22-1D88	BACC47DE3	4	.035 [0.89]	.087 [2.21]				45		.108 [2.74]	22-24	.070-.080 [1.78-2.03]	BROWN				.686
YHMM22-2D88	BACC47DE4	2	.036 [0.91]	.066 [1.68]				30		.080 [2.03]	22-24	.041-.065 [1.04-1.65]	GREEN				.748
YHMM16-6D28	BACC47DE1A	1	.065 [1.65]	.111 [2.82]	.040 [1.02]	.330 [8.38]	.085 [2.16]			.130 [3.30]	16-20	.080-.110 [2.03-2.79]	BROWN	GOLD OVER NICKEL (2c)	COPPER (1b)		.587
(6) YHMM16-7D28	BACC47DE5A	3	.060 [1.52]	.084 [2.13]						.102 [2.59]	16-20	.063-.083 [1.60-2.11]	BLUE				.627
YHMM18-3D28	BACC47DE6A	2	.054 [1.37]	.070 [1.78]		.321 [8.15]	.094 [2.39]		.249 [6.32]	.086 [2.18]	18-20	.056-.069 [1.42-1.75]	BLACK				.659
YHMM20-3D28	BACC47DE7A	2	.044 [1.12]	.066 [1.68]	.028 [0.71]					.080 [2.03]	20-22	.047-.065 [1.19-1.65]	RED				.693
YHMM22-4D28	BACC47DE3A	4	.035 [0.89]	.087 [2.21]				45	.263 [6.68]	.108 [2.74]	22-24	.070-.080 [1.78-2.03]	---		BRASS (1a)		.686
(6) YHMM22-5D28	BACC47DE4A	2	.036 [0.91]	.066 [1.68]				30		.080 [2.03]	22-24	.041-.065 [1.04-1.65]	GREEN		COPPER (1b)		.712
YHMM24-3D28	BACC47DE8A	5	.029 [0.74]	.046 [1.17]	.024 [0.61]				.249 [6.32]	.100 [2.54]	24	.032-.045 [0.81-1.14]	VIOLET				.698

NOTES: UNLESS OTHERWISE SPECIFIED

1. MATERIAL:
   a. LEADED BRASS PER ASTM B 453.
   b. LEADED COPPER C18700 PER ASTM B 301.
2. FINISH:
   a. SILVER PLATE PER QQ-S-365.
   EXCEPT THICKNESS SHALL BE 200 µ-INCH [5.08 MICRONS] MIN.

   GOLD PLATE PER MIL-G-45204. TYPE 1 OR 2. GRADE C OR D.

   b. 30 µ-IN [0.76 MICRONS] MIN GOLD OVER 100 µ-IN [2.54 MICRONS] MIN COPPER.

   c. 30 µ-IN [0.76 MICRONS] MIN GOLD OVER 50-200 µ-IN [1.27-5.08 MICRONS] NICKEL PER QQ-N-290 OVER COPPER FINISH.
3. CONTACT CAN ACCOMMODATE CABLES PER THE FOLLOWING SPECS. MIL-W-5086 & MIL-W-81044.
4. TO ORDER CONTACTS ON AN EXPENDABLE CARRY STRIP FOR USE WITH THE SOURIAU YD-2 HYPRESS. ADD THE PREFIX 'M' TO THE SOURIAU CONTACT CATALOG NUMBER I.E., 'MYHMM16-1F50'
5. TO ORDER CONTACTS ON AN EXPENDABLE CARRY STRIP FOR USE WITH THE SOURIAU BANDOMATIC CRIMP TOOL ADD THE PREFIX 'C' TO THE SOURIAU CONTACT CATALOG NUMBER. I.E., 'CYHMM16-1F50'
6. COLOR CODING FOR YHMM22-5D28 (GREEN) AND YHMM16-D28 (BLUE) TO BE MARKED IN THIS AREA ONLY. (SEE FIG 5)

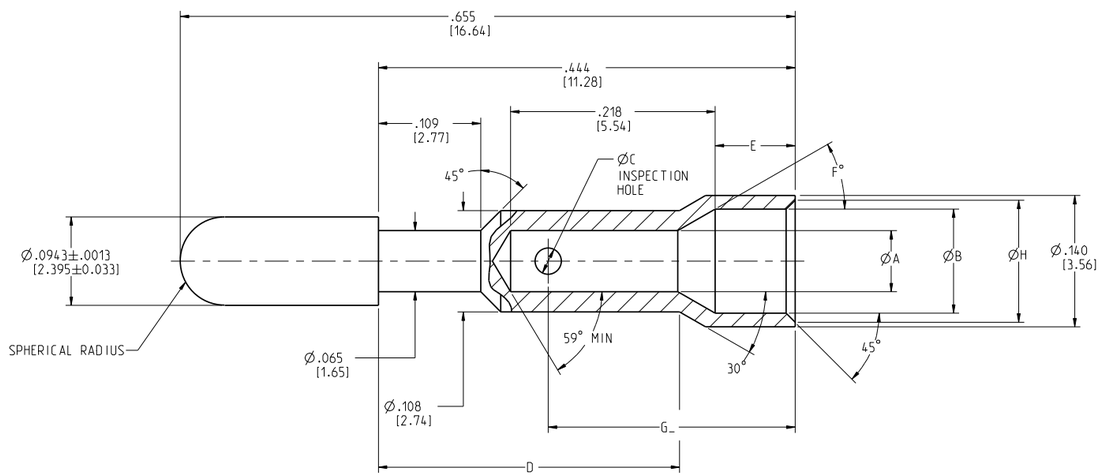

FIGURE 1

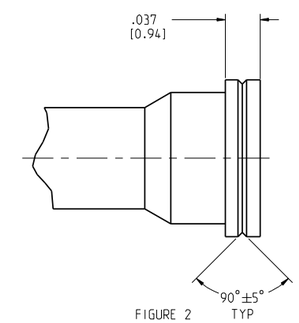

FIGURE 2

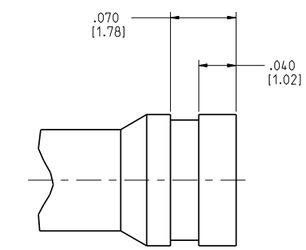

FIGURE 3

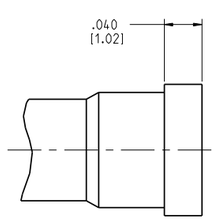

FIGURE 4

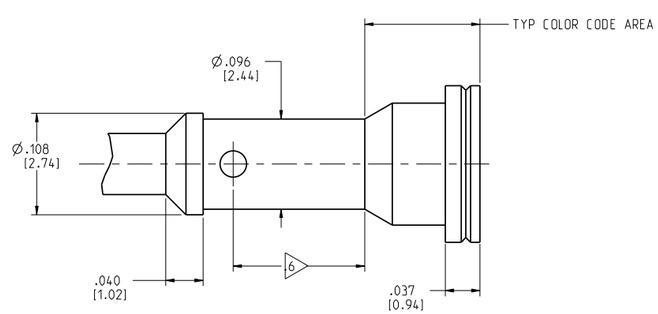

FIGURE 5

REV	ECN NUMBER	BY DATE	CHKD DATE
AD	REVISED PER ECN10186	GRB 1-19-07	FLR 1-19-07
27	IN TABLE FOR CAT. NO YHMM22-1B8 COLOR CODE 'BROWN' WAS NONE TO NOTE 7 ADDED AND YHMM16-7D28 (BLUE). FLAGGED NOTE 7 TO CAT NO. YHMM16-7D28 (ECN3387)	DET 1-29-96	FDH 1-29-96
26	ADDED NOTE 7 & DIM FLAG 7 TO FIG 5 (ECN3387)	JW 9-15-95	CWL 09-15-95
25	REVISED AND REDRAWN PER ECN 15029)	FDH 05-05-94	RPS 5-05-94

REFERENCE:
WSD60451
WSD68707
WSD69533
DS131

SUPERSEDES:
SC66075-1
SC58285-0
SC54533-12
SD66466-24

DRAWING TITLE
TERMINAL BLOCK MODULE CONTACT

CAT NO.
YHMM__-___ (SEE TABLE)

CAGE NO: 09922 | SIZE: C

LINEAR MEASURE: INCH (mm) | THIRD ANGLE PROJECTION

TOLERANCES UNLESS OTHERWISE SPECIFIED

No. OF PLACES	INCH [mm]
ONE PLACE	±.1 [±3]
TWO PLACES	±.02 [±0.5]
THREE PLACES	±.010 [±0.25]
ANGLES±1°	

CUSTOMER

INTERPRET THIS DRAWING IN ACCORDANCE WITH ASME Y14.5M - 1994.

SOURIAU Connection Technology
www.souriau.com

APPROVAL		
DRAWN:	GRB	01-19-07
CHKD :	FLR	01-19-07
DSGN :	AER	08-21-68
MFG :	XXX	01-19-07
QC :	BDB	01-19-07

DRAWING SCALE: 10:1
DRAWING NO. SE66466 | REV AD
1 OF 1

PRO-E

THIS DRAWING IS A CONTROLLED DOCUMENT FOR SOURIAU USA, INC. IT IS SUBJECT TO CHANGE WITHOUT NOTIFICATION. CONTACT DRAWING CONTROL OFFICE FOR THE LATEST REVISION.

THE INFORMATION CONTAINED IN THIS DRAWING IS CONFIDENTIAL AND MAY NOT BE DISCLOSED WITHOUT WRITTEN CONSENT FROM SOURIAU USA, INC.